Article 1 Administration

Division 1 General Provisions

Sec. 1.1.1 Short Title. This Code shall be known as the Marion County Land Development Code (LDC) and may be referred to herein as the "Code."

Sec. 1.1.2 Authority and purpose.

A. This Code is adopted under the general authority of Ch. 125 FS and the requirements of § 163.3161 FS.

B. This Code is adopted to protect the public health, safety, and general welfare while allowing, encouraging, and promoting flexibility, economy, and ingenuity in the layout and design of land development.

C. This Code shall be administered to ensure orderly growth and development, and shall serve to implement the Marion County Comprehensive Plan, consistent with the provisions of § 163.3202 FS and other applicable and related policies as established by the Board.

Sec. 1.1.3 Jurisdiction and effective date.

A. The provisions in this Code shall be applicable to all lands in unincorporated Marion County unless exempted herein.

B. The original Marion County Land Development Code became effective on June 18, 1992.

C. This Code shall become effective on October 1, 2013 and supercedes previous versions of this Code.

Sec. 1.1.4 Fee authority. Reasonable fees sufficient to recover costs incurred in the administration and enforcement of this Code may be established by Resolution of the Board of County Commissioners.

Sec. 1.1.5 Enforcement.

A. It shall be the duty of the Marion County Administrator, or his designee, to enforce the provisions of this Code.

B. A violation of this Code shall be deemed a non-criminal violation, punishable as provided by law, and each day such violation continues it will constitute a separate offense. The Code Enforcement Board, as established by Chapter 2, Article 5 of the County Code of Ordinances, may use any remedies or penalties authorized by Ch. 162 FS that it deems necessary to bring about compliance with the provisions of this Code. Code Enforcement officers are authorized to issue civil citations for code violations.

C. It is a violation of this Code if a development, improvement, or infrastructure facility, subject to the provisions of this Code, is altered, modified, or not used in accordance with the intent of the permit without prior permission by the County. It is also a violation of this Code to alter or expand a use that was made non-conforming by the adoption of the prior version of this Code on June 18, 1992.

Sec. 1.1.6 Interpretation, conflict, and separability.

A. The provisions of this Code shall be interpreted to be the minimum requirements.

B. Where a condition imposed by any provision of this Code is more restrictive than conditions imposed by any other provisions of this Code or of any other applicable law, code, ordinance, resolution, rule, or regulation of any kind, the more restrictive or higher standard condition shall govern.

C. The provisions of this Code are separable. If an article, division, section, sentence, clause, or phrase of this Code is adjudged by a court of competent jurisdiction to be invalid, the decision shall not

invalidate the remaining portions of this Code.

D. Pronouns of feminine instead of masculine gender and of plural instead of singular number are to be substituted herein wherever the context so requires.

E. The words "shall" and "will" are mandatory; "may" and "should" are permissive.

Division 2 **Definitions.** Unless otherwise expressly stated, for the purposes of this Code, the following terms shall have the meaning indicated herein.

ABANDONED WELL. A well which has its use permanently discontinued, is in such disrepair that its continued use for obtaining groundwater is impractical, has been left uncompleted, is a threat to groundwater resources, or otherwise is or may be a health or safety hazard.

ABROGATION. To close, vacate, or abandon a right-of-way.

ACCESSORY BUILDING OR STRUCTURE (APPURTENANT STRUCTURE). A subordinate building or structure on the same lot, or parcel, or on a contiguous parcel which is occupied by, or devoted to, an accessory use. As it relates to the Flood Plain Overlay Zone, accessory structures should constitute a minimal investment and should be designed to have minimal flood damage potential (examples of accessory structures are detached garages, carports, storage sheds, pole barns, and hay sheds).

ACCESSORY USE. A use naturally and normally incidental and subordinate to the principal use of a structure or land and located on the same lot, or parcel or on a parcel contiguous to the principal use to which it relates.

ACTIVE RECREATION. Recreational activities that occur in areas that require substantial structural development and investment, such as playing fields, courts or other facilities. Examples of active recreation include soccer, baseball, swimming in a pool, tennis and basketball. Active recreation differs from passive recreation primarily by the facilities that are required to undertake an activity.

ADDITION. An extension or increase in floor area or height of a building or structure.

ADULT BOOKSTORE OR FILM STORE. An establishment having as a substantial portion of its stock in trade books, magazines, other periodicals, films, video tapes, video disks, or similar items which are distinguished or characterized by their emphasis on matter depicting, describing or relating to "specified sexual activities" or "specified anatomical areas."

ADULT BOOTH. A small enclosed or partitioned area inside an adult entertainment establishment that is:

A. Designed or used for the viewing of adult material by one or more persons; and

B. Accessible to all persons, regardless of whether a fee is charged for access.

The term "adult booth" includes but is not limited to a "peep show" booth, or other booth used to view "adult material." The term "adult booth" does not include a foyer through which a person can enter or exit the establishment, or a rest room.

ADULT CABARET. A bar, lounge, club, or other establishment which may sell alcoholic or non-alcoholic beverages or food and which features as part of the regular entertainment topless or bottomless dancers, strippers, whether male or female, or similar entertainers whose acts are characterized by an emphasis on matter depicting, describing, or relating to "specified sexual activities" or "specified anatomical areas." This definition shall include Adult Encounter Parlor, Adult Lounge, Adult Novelties, Adult Entertainment, and Adult Modeling Studio.

ADULT THEATER OR MINI-MOTION PICTURE THEATER OR DRIVE-IN. An enclosed building or drive-in with a capacity for fewer than 50 persons in which a substantial portion of the material presented is distinguished or characterized by an emphasis on matter depicting, describing or relating to "specified sexual activities" or "specified anatomical areas" for observation by patrons therein.

ADULT THEATER OR MOTION PICTURE THEATER OR DRIVE-IN. An enclosed building or drive-in with a capacity of 50 or more persons in which a substantial portion of the material presented is distinguished or characterized by an emphasis on matter depicting, describing or relating to "specified sexual activities" or "specified anatomical areas" for observation by patrons therein.

ADVERTISING. Sign copy or materials intended to directly or indirectly promote the sale or use of a product, service, commodity, entertainment, or real or personal property.

AGRICULTURAL USES. Those uses of land which involve the science and art of production of plants and animals useful to man including to a variable extent, the preparation of these products for man's use and their disposal by marketing or otherwise. These shall include horticulture, floriculture, viticulture, aquaculture, forestry, dairy, livestock, including the breeding and/or training of horses, poultry, bees, ratites, and any and all forms of farm products and farm production.

AIR GAP. A physical separation between the free flowing discharge and an open or non-pressure receiving vessel.

ALTERATION. Any change in size, shape, character, or use of a building or structure.

ANIMAL FEEDING OPERATION. As defined in § 62-670.200 FAC.

ANIMAL UNIT. As defined in § 62-670.200 FAC.

ANTENNA. Any exterior apparatus designed to transmit or receive communications as authorized by the Federal Communication Commission (FCC). The term "antenna" shall not include satellite earth stations used to receive direct-to-home satellite services as defined in 47 USC § 303(v). An array of antennas, installed at one time and designed as a single, integrated system, shall be considered to be a single antenna.

ANTENNA SUPPORT STRUCTURE. Any building or other structure other than a tower, which can be used for the location of an antenna. An antenna support structure shall be referred to as a "utilized antenna support structure" if it is or has been used for the location of an antenna.

ANTIQUATED SUBDIVISION. A subdivision, subdivision series, or any portion of a subdivision or subdivision series, identified by the Board in which further or continued development of that subdivision is deemed undesirable consistent with the provisions of § 163.3164 FS.

APPEAL. The process of seeking a higher authority’s determination as established by this Code when a specific decision or determination made by designated staff, committee, or board is disputed.

APPLICANT. The property owner, the duly authorized representative of the property owner, or the lessee or occupant of said property who submits a County service or development application to and for said property and who can be bound to all legal obligations related to such request.

AQUACULTURE. The commercial production of fin fish and shellfish, such as crustaceans and mollusks, within a confined space and under controlled feeding, sanitation, and harvesting procedures.

AREA OF SHALLOW FLOODING. A designated AO or AH Zone on the community's Flood Insurance Rate Map (FIRM) with base flood depths from one to three feet where a clearly defined channel does not exist, where the path of flooding is unpredictable and indeterminate, and where velocity flow may be evident. Such flooding is characterized by ponding or sheet flow.

AS-BUILT/RECORD SURVEY. A record of completed construction drawings documenting the actual construction work as it exists in the field, including any changes made from the originally approved plans, meeting the requirements as set forth in § 5J-17.52(1) FAC, and signed, sealed, and dated by a Professional Surveyor and Mapper licensed by the State of Florida.

AUTOMOBILE WRECKING YARD. Premises used for the dismantling or disassembling of two or more used motor vehicles or trailers, or the business of storage, sale, or dumping of dismantled, obsolete or wrecked vehicles, trailers or their parts; a junk yard.

AUXILIARY WATER SUPPLY SYSTEM. A pressurized or pumping-ready water supply system other than a public potable water system which is located on or available to the customer's property whether or not connected to a distribution system within the property. Such auxiliary systems include but are not limited to reclaimed water systems and private wells, as further defined in AWWA M-14 most current edition.

AVAILABLE CAPACITY. An existing central water or sewer system shall be deemed to have "available capacity," if: (a) as to a central water or sewer system, it is capable of providing central service concurrently with the

proposed build-out schedule of the project without the applicant having to expand the facility providing treatment for the water to and/or the wastewater from the project; provided, however, if it is necessary for the Marion County Utility Department to so expand the treatment facility, the applicant may be required to prepay capital charges imposed for such facility; and (b) as to a central water or sewer system, its existing water or sewer lines are of sufficient size and capacity to accommodate the water or sewer requirements of the project without the applicant having to reconstruct the existing lines. This requirement concerns existing lines, only, and does not excuse an applicant from having to construct new lines from its project to the point of connection to the central water or sewer system. Further, if it is necessary to replace the existing lines, the County may require the applicant to pay to reconstruct existing lines, within the applicant's required connection distance, in an amount equal to what it would have cost the applicant to originally construct such lines of sufficient size and capacity to accommodate the applicant's project. This does not preclude the County from requiring the developer to upsize the lines in exchange for additional Equivalent Residential Connection credits.

AVIARY. A place for keeping birds confined, including but not limited to a large enclosure where birds fly free, a structure where birds are confined in cages, or large cages where birds are confined. A residential structure containing nine or more birds shall be considered an aviary.

BACKFLOW PREVENTION ASSEMBLY. A mechanical assembly which is supplied with properly located resilient-seated shut-off valves at each end of the assembly and properly located test cocks, and meets the standards of the University of Southern California's Foundation for Cross-Connection Control and Hydraulic Research and complies with the standard listed in the Florida Building Code as adopted by Marion County.

BACKFLOW PREVENTION DEVICE. A mechanical device or plumbing configuration which is designed to prevent backflow.

BAR. Any place devoted primarily to the retail sale and on premises consumption of malt, vinous, or other alcoholic beverages; a tavern.

BASE FLOOD. The flood having a one percent chance of being equaled or exceeded in any given year (also called the "one percent annual chance flood," "100-year flood" and the "regulatory flood").

BASE FLOOD ELEVATION. The water-surface elevation associated with the base flood.

BASEMENT. That portion of a building having its floor sub-grade (below ground level) on all sides.

BED AND BREAKFAST INN. A building, or part thereof, other than a motel or hotel, where sleeping accommodations are provided for transient guests, and may also serve as the residence of the owner or manager.

BEEKEEPING. The keeping or raising of bees for commercial purposes.

BERM. A mound of soil, either natural or manmade.

BIORETENTION FACILITY. An area which provides retention of stormwater through the use of vegetated depressions of approximately four to nine inches in depth with landscaping and engineered soil matrix, designed to collect, store, and infiltrate stormwater runoff. The invert of a bioretention facility is the bottom of the engineered soil matrix.

BOARD. The Marion County Board of County Commissioners.

BOAT YARD. A lot, tract, or parcel where facilities for the construction, reconstruction, major repair, maintenance, or sale of boats, marine engines, equipment, and services of all kinds are provided including marine railways, lifting, or launching services and marinas.

BOTTLE CLUB. A commercial premises to which any alcoholic beverage is brought for consumption on the premises.

BREAKAWAY WALL. A wall that is not part of the structural support of the building and is intended through its design and construction to collapse under specific lateral loading forces without causing damage to the elevated portion of the building or the supporting foundation system.

BUFFER. An area within a property or site, generally adjacent to and parallel with the property line, either consisting of natural existing vegetation or created by the use of trees, shrubs, buffer walls, buffer fences or berms, designed to limit continuously the view of or sound from the site to adjacent sites, properties, or water bodies.

BUFFER FENCE. A permanent opaque vertical structure providing a barrier with a finished height of six feet measured from the adjacent grade or at a height as required otherwise.

BUFFER WALL. A permanent opaque vertical structure with concrete components including, but not limited to pillars, panels, block or brick, used within a buffer meeting the requirements of the Florida Building Code, and providing a barrier (whether for sound, wind, or, views) with a finished height of six feet measured from the adjacent grade or at a height as required otherwise.

BUILDABLE AREA. As it relates to hamlets, Rural Village District, and Rural Town, the remaining land area eligible for development purposes once areas of open space and open water are subtracted from the gross development lot/parcel/site.

BUILDING. Any structure designed for the habitation of persons or animals or for shelter of property.

BUILDING PERMIT. A permit issued by Marion County pursuant to the provisions of Article 2 of the Marion County Code of Ordinances, consistent with the provisions of the Florida Building Code as established by the State of Florida.

BUILDING SIGN. A sign displayed upon or attached to any part of the exterior of a building, including walls, windows, doors, parapets, marquees, and roof slopes of 45 degrees or steeper.

BUSINESS OR PROFESSIONAL OFFICE. A space within a building where commercial service activity is primarily conducted which may involve the sale of goods or commodities purely incidental to business services provided.

CAMOUFLAGED ANTENNA AND/OR TOWER. A wireless communication antenna and/or tower designed to unobtrusively blend into the existing surroundings and be disguised to not have the appearance of a wireless communication antenna and/or tower. Camouflaged antennas and/or towers on buildings must be disguised to appear as an accessory structure or feature that is normally associated with the principal use occupying the property. Camouflaged antennas and/or towers must be disguised to blend in with other facilities on the property or existing vegetation, such as a tower constructed in the form and shape of a tree to be part of a forested area, or an antenna and/or tower constructed to be a component of a bell, clock, or water tower on sites with compatible buildings, or a component of a church steeple on sites with churches. Surface finish, paint and/or markings alone are insufficient to qualify for a determination as a camouflaged antenna and/or tower.

CAPACITY. Supply of public facility:

A. Available - capacity of public facility after subtracting demand and reserved capacity.
B. Design - capacity that public facility was designed for.
C. Programmed - capacity to be added to public facility by improvement.
D. Reserved - capacity that has been reserved for a specific development project.

CAPACITY RESERVATION FEE. Fee required which reserves facility capacity. Fee is credited towards applicable impact fees.

CAPITAL IMPROVEMENT. A physical asset constructed or purchased to provide, <u>increase the capacity of,</u> or replace a public facility.

CARPORT. A garage not completely enclosed by walls and doors.

CENTRALIZED SYSTEM. A water withdrawal, treatment, and distribution system (including fire hydrants) or a wastewater collection, treatment, and dispersal system that serves the needs of one or more residential or non-residential development projects. Centralized systems are generally owned, operated, and maintained by Marion County, a city, or a Public Service Commission-certificated entity. Types of facilities and systems not

covered by the foregoing general definition are found in § 367.022 FS.

CHANGE OF USE. A discontinuance of an existing use and the substitution of a use of a different kind or class.

CLEAN DEBRIS. Any solid waste material that is virtually inert, that is not a pollution threat to ground or surface waters, that is not a fire hazard, and that is likely to retain its chemical and physical structure under expected conditions of disposal or use. The term includes earth, brick, glass, ceramics, and uncontaminated concrete including embedded pipe or steel, and other wastes designated by the FDEP.

CLEAN FILL. Granular soil free of roots, other vegetative material, and debris typically represented by an AASHTO Soil Classification A-3. Other AASHTO soil classifications may satisfy a requirement for “clean fill” if they meet industry specifications for various fill operations as accepted by FDOT or the Florida Building Code.

CLEARING. The uprooting or removal of vegetation in connection with development. This term does not include yard maintenance operations or other such routine property clean-up activities.

CLOSED BASIN. An internally drained watershed in which the runoff does not have a surface outfall up to and including the 100-year flood elevation.

CLUSTER DEVELOPMENT. A development design technique that concentrates buildings and infrastructure in specific areas on a site to allow the remaining land to be used for open space, preservation of environmentally sensitive areas, or agriculture.

CLUSTERING. The grouping together of principal structures and infrastructure on a portion or portions of a development site.

COLLOCATION. As it relates to antennas, the process of locating two or more antennas on an existing or proposed tower or antenna support structure.

COMMERCIAL VEHICLE. Any vehicle designed or used for the transport of people, livestock, goods, or things. This does not include private passenger vehicles and/or trailers used for private nonprofit transport of goods.

COMMERCIALLY DEVELOPED PARCEL. A parcel of property on which there is at least one walled and roofed structure used, or designed to be used, for purposes other than residential or agricultural.

COMMUNITY CENTER. A building designed and used as a meeting or recreation area to accommodate and serve the community in which it is located.

COMMUNITY RESIDENTIAL HOMES. Group homes or adult foster care facilities in which no more than 14 persons excluding staff reside and where program size and content is structured to meet the individual needs of the residents in these homes.

COMPLETELY ENCLOSED BUILDING. A building having a complete, permanent roof and continuous walls on all sides, either party walls or exterior walls, including windows and doors.

COMPREHENSIVE PLAN. The Marion County Comprehensive Plan as adopted by the Board pursuant to Ch. 163 FS.

CONCENTRATED ANIMAL FEEDING OPERATION. As defined in § 62-670.200 FAC.

CONCURRENCY MANAGEMENT SYSTEM. The policies, procedures, standards, and criteria that Marion County will utilize to assure that development orders and permits are not issued unless the necessary facilities and services are available concurrent with the impacts of development.

CONSERVATION EASEMENT: An easement established under § 704.06 FS, as amended, creating a right or interest in the real property in favor of the entity named in the easement.

CONSTRUCTION AND DEMOLITION DEBRIS (C&DD) DISPOSAL FACILITY. A facility for the disposal of “construction and demolition debris,” as that term is defined in § 403.703(6) FS; also referred to as Construction and Demolition (C&D) Landfill.

CONSTRUCTION, EXISTING. As it relates to flood plain management, structures for which the "start of construction" commenced before January 19, 1983. This term may also be referred to as "existing structures."

CONSTRUCTION, NEW. As it relates to flood plain management, any structure for which the "start of

construction" commenced on or after January 19, 1983. The term also includes any subsequent improvements to such structures.

CONSTRUCTION PERMIT. The permit issued by the Office of the County Engineer for construction of all required improvements including construction in private and public rights-of-way.

CONTIGUOUS PARCELS. Those parcels of land with at least one common property line.

CONTINUING IN GOOD FAITH. As it relates to vested rights, shall mean the final local development order for a project has been issued and has not expired, and no period of 180 consecutive days, or a previously approved time frame as agreed to by the County, has passed without the occurrence of development activity which significantly moves the proposed development toward completion; unless the developer establishes that such 180 day lapse or previously approved time frame lapse in development activity was due to factors beyond the developer's control; or unless development activity authorized by a final local development order has been substantially completed on a significant portion of the development subject to said final development order and has significantly moved the entire development toward completion.

CONTRACTOR. The person, firm, or corporation with whom the contract for work has been made by the owner, the developer, or the County in accordance with any applicable State laws.

COVENANTS, CONDITIONS AND RESTRICTIONS (CCR). Declaration of Covenants, Conditions and Restrictions, recorded in the public records for a development project.

CONVENIENCE STORE. Any retail establishment offering for sale food products, household, and sundry items, beverages, gasoline, and other similar goods, but not including sales of prescription drugs, alcoholic beverages for on-premises consumption, or any form of used merchandise sales, personal services, repair services, or any outdoor sales, service, storage, or display other than approved accessory gasoline pumps.

COPY. As it relates to signs, the linguistic or graphic content of a sign.

COUNTY. The government of Marion County as a political subdivision of the State of Florida; or the physical jurisdictional limits of Marion County as those boundaries described in § 7.42 FS.

COUNTY ENGINEER. The professional engineer retained by the Board of County Commissioners in the capacity of administering the Office of the County Engineer. The County Engineer may appoint designees to specific management and operation functions as appropriate .

CROSS-CONNECTION. Any physical arrangement whereby a Public Potable Water System is connected directly or indirectly with any other water supply system, sewer, drain, conduit, pool, storage reservoir (other than for storage of Potable Water by a Utility), plumbing fixture, or other device which contains or may contain contaminated water, wastewater or other waste, or liquid of unknown or unsafe quality which may be capable of imparting contamination to the Public Potable Water System as the result of Backflow. By-pass arrangements, jumper connections, removable sections, swivel or changeable devices, and other temporary or permanent devices through which or because of which Backflow could occur are considered to be Cross-Connections.

CROSS CONNECTION CONTROL COORDINATOR (CCC). Utility Department Employee who is responsible for implementation of cross connection control directives.

DECENTRALIZED SYSTEM. A water withdrawal, treatment, and distribution system (including fire hydrants) or wastewater collection, treatment and dispersal system that is designed to serve the needs of a single residential development project or non-residential development project. Decentralized systems are, further: (1) usually located within the boundaries of the development project; (2) not typically owned, operated, and maintained by Marion County, a city, CDD, or Public Service Commission-certificated entity; and (3) considered as temporary facilities until a centralized system is available to serve the development project.

DEDICATION. An act of conveyance and acceptance of an interest in or use of property to a public or private entity. See Sections 177.031(6), (16); 177.081; and 177.085, Fla. Stat. (2012), for statutory requirements related to dedications. Mortgagees are required to join in dedications.

DEMAND. Quantifiable use of a public facility. See Capacity.

DEVELOPABLE AREA. The portion of a project area that lies outside sovereign submerged lands.

DEVELOPER. The person, firm, entity, or corporation engaged in developing or improving real estate for use or occupancy.

DEVELOPMENT. All structures and other modifications of the natural landscape above or below ground or water, on a particular site including, but not limited to buildings or other structures, mining, dredging, filling, grading, paving, excavating, drilling operations, or storage of materials or equipment. As it relates to vested rights, shall mean the particular development activity authorized by unexpired final local development order issued for a specific project is continuing in good faith. Also see § 163.3164(14) FS, § 163.3221(4) FS, and § 380.04 FS.

DEVELOPMENT AGREEMENT. An agreement between Marion County and additional parties specifying requirements of the parties in relation to a development application. Development Agreements are authorized by the "Florida Local Government Development Agreement Act," §§ 163.3220-163.3243 FS and are subject to the applicable provisions of those sections.

DEVELOPMENT AREA. See project area.

DEVELOPMENT ORDER. An official action granting, granting with conditions, or denying an application for a development permit consistent with this Code, § 163.3164 FS and Ch. 380 FS.

DIAMETER AT BREAST HEIGHT (DBH). The diameter of a tree trunk measured at 4.5 feet above adjacent grade elevation.

DIVIDER MEDIAN. A continual landscaped island located between lineal rows of parking which face head-to-head.

DOMESTIC WASTEWATER RESIDUALS. A domestic wastewater treatment by-product resulting from the biological treatment process and which is disposed of by application for agricultural or land reclamation purposes. Domestic wastewater residuals shall have the same meaning as "biosolids," as defined in rule § 62-640.200 FAC.

DOUBLE CHECK VALVE ASSEMBLY. A backflow prevention assembly which includes two internally loaded, independently operating spring loaded check valves, which are installed as a unit between two tightly closing resilient-seated shutoff valves and fittings with properly located test cocks.

DRAFT HYDRANTS. Draft hydrants are standard fire hydrants but are supplied by a static water source. Normally these hydrants are not supplemented by a fire pump and rely on a fire department engine to draft from the source. These draft hydrants have little to no pressure and function similar to a dry hydrant tank.

DRAINAGE DETENTION AREA (DDA). See water detention area.

DRAINAGE RETENTION AREA (DRA). See water retention area.

DRIPLINE. An imaginary line on the ground defined by vertical lines extending from the outermost tips of tree to the ground or the area within a radius of one foot for each one inch DBH of the tree, whichever is greater.

DRIVEWAY APRON. That portion of a driveway lying between the street right-of-way line and the edge of the travel lane of the street.

DROUGHT TOLERANT VEGETATION. Plants which have the ability to survive without supplemental irrigation through periods of drought characteristic of the north-central Florida region, excluding invasive plant species.

DRYLINE PERMIT. A construction permit for sewer lines issued with certain special conditions applied.

DUCTILE IRON PIPE RESEARCH ASSOCIATION (DIPRA). Any reference to DIPRA Standards shall be taken to mean the most recently published revision unless otherwise specified.

DUDE RANCH. A vacation resort offering activities typical of western ranches such as horseback riding.

DUE PUBLIC NOTICE. Publication of notice of the date, time, and place of a required public hearing; the title or titles of proposed ordinances, and the place within the County where such proposed ordinances may be inspected by the public. The notice shall also advise that interested parties may appear at the public hearing and be heard with respect to the proposed ordinance. Publication of notice shall be given at least ten days

prior to said public hearing in a newspaper of general circulation in the County. Due public notice for public hearings of the Planning and Zoning Commission and the Board for land use permits shall include mailed written notice to all owners of property, within 300 feet of the boundaries of the property subject to the land use change, whose address is known by reference to the latest ad valorem tax records and to all parties of interest who timely request such notice in writing to the Growth Services Director or designee. The mailed notice shall include a brief explanation of the land use permit request and a location map identifying the property under consideration and shall notify the person of the time, date and location of all public hearings. Notices shall also be posted in a conspicuous place or places on or around such lots, parcels, or tracts of lands requesting the land use change. Affidavit proof of the required publication, mailing and posting of the notice shall be presented at the hearing by the Growth Services Director, or designee, to the Clerk of the Court. For land use changes initiated by the County, and for ordinances that change the actual lists of permitted, conditional or prohibited uses within a zoning category, the provisions of §125.66(4) FS shall apply.

DWELLING UNIT. Any structure or portion thereof which is designed for or used for residential purposes as a self-sufficient or individual unit by one family or other social association of persons.

ELECTRIC SUBSTATION. An electric substation which takes electricity from the transmission grid and converts it to a lower voltage so it can be distributed to customers in the local area on the local distribution grid through one or more distribution lines less than 69 kilovolts in size.

ELEVATED BUILDING. A non-basement building built to have the lowest floor elevated above the ground level by foundation walls, posts, piers, columns, pilings, or shear walls.

ELEVATION. The vertical height or heights relative to a defined datum.

EMPHASIS. As it relates to the adult entertainment business, "emphasis" or "emphasis on" means that the type of matter specified is the apparent matter upon which the particular work or exhibition is based, or that the matter specified is a substantial portion of such work or exhibition.

ENCROACHMENT. As it relates to the Flood Plain Overlay Zone, the advance or infringement of uses, plant growth, fill, excavation, buildings, permanent structures or development into a flood plain, which may impede or alter the flow capacity of a flood plain.

ENVIRONMENTALLY SENSITIVE LANDS. Lands or areas which include environmental or other natural features and/or characteristics as identified by Comprehensive Plan Conservation Element Policy 1.1.1.

EQUINE CENTER. A facility identified and designated by the Board as a unique and specialized destination for regional, state, and national equine interests and activities that further the County's equine identity as "The Horse Capital of the World."

EQUIVALENT RESIDENTIAL CONNECTION (ERC). A unit of measurement representing capacity demand of 300 gallons per day for wastewater or 350 gallons per day for water.

ERECT A SIGN. To construct, reconstruct, build, relocate, raise, assemble, place, affix, attach, create, paint, draw, or in any other way bring into being or establish a sign. It shall not include any of the foregoing activities when performed as an incident to a change of message or routine maintenance.

ESTABLISHED CHURCH. Established place of meeting or worship at which non-profit religious services are regularly conducted and carried on.

EXCEPTION. As it relates to vested rights, shall mean an exception to the densities required in the Future Land Use Element for parcels of record as of January 1, 1992 for the construction of one residential unit. Exceptions apply to density only and do not exempt parcels from any other requirement of the Comprehensive Plan.

EXPANSION TO AN EXISTING MANUFACTURED HOME PARK OR SUBDIVISION. The preparation of additional sites by the construction of facilities for servicing the lots on which the manufactured homes are to be affixed (including the installation of utilities, the construction of streets, and either final site grading or the pouring of concrete pads).

EXTRACTION OR RESOURCE EXTRACTION. The removal of resources from their location so as to make them suitable for commercial, industrial, or construction use, but does not include excavation solely in aid of on-site

farming or on-site construction, nor the process of searching, prospecting, exploring, or investigating for resources by drilling.

FAILING. As it relates to an onsite sewage treatment and disposal system (OSTDS), failing is the point at which the septic tank or at least 25 percent of the drainfield must be replaced, as determined by a Florida licensed plumber or OSTDS contractor, the Marion County Health Department, or the Board, due to improper sizing or construction, physical deterioration, root penetration, and/or intentional or unintentional damage. Where central sewer is available, the Failing shall also include the point at which pumping is required, as determined by a Florida licensed plumber or OSTDS contractor, the Marion County Health Department, or the Board.

FAMILY. One or more persons occupying the whole or part of a dwelling unit and living as a single, housekeeping unit provided that a group of four or more persons who are not within the second degree of kinship shall not be deemed to constitute a family, except as set forth in Title VIII of the Civil Rights Act of 1968 and as subsequently amended by the Fair Housing Amendments Act of 1988.

FAMILY/GUEST COTTAGE/APARTMENT. A small detached dwelling unit for use by immediate family members or guests which is an accessory use to a single-family dwelling. The cottage may be a removable, modular structure, or a conventionally constructed structure, and shall be compatible with the existing dwelling. It shall be designed as an independent living unit smaller than the primary structure.

FEEDLOT. A confined area or structure, pen or corral, used to fatten livestock for a period of at least 30 days prior to final shipment.

FENCE. A vertical structure used to provide a physical division between areas.

FIRE LINE. Piping from the water main to point of delivery exclusively providing fire protection.

FISH HATCHERY. Establishments primarily engaged in hatching fish, not including fish or farm ponds.

FLAG LOT. A parcel of land shaped like a flag with a narrow strip providing access; the bulk of the property contains no frontage.

FLOOD OR FLOODING.

A. A general and temporary condition of partial or complete inundation of normally dry land areas from:
   (1) The overflow of inland or tidal waters.
   (2) The unusual and rapid accumulation or runoff of surface waters from any source.
   (3) Mudslides (i.e., mudflows) which are proximately caused by flooding as the unusual and rapid accumulation or runoff of surface waters from any source and are akin to a river of liquid and flowing mud on the surface of normally dry land areas, as when earth is carried by a current of water and deposited along the path of the current.

B. The collapse or subsidence of land along a shore of a lake or other body of water as the result of erosion or undermining caused by waves or currents of water exceeding anticipated cyclical levels or suddenly caused by an unusually high water level in a natural body of water, accompanied by a severe storm or by an unanticipated force of nature, such as a flash flood or an abnormal tidal surge or by some similarly unusual and unforeseeable event which results in flooding from the overflow of inland or tidal waters.

FLOOD INSURANCE RATE MAP (FIRM). An official map of the community, issued by FEMA, which delineated both the areas of special flood hazard and the risk premium zones applicable to the community.

FLOOD INSURANCE STUDY (FIS). The official hydraulic & hydrologic report provided by FEMA. The study contains an examination, evaluation, and determination of flood hazards, and, if appropriate, corresponding water surface elevations, or an examination, evaluation, and determination of mudslide (i.e., mudflow) and other flood-related erosion hazards. The study may also contain flood profiles, as well as the FIRM, FHBM (where applicable), and other related data and information.

FLOOD PLAIN ADMINISTRATOR. The individual duly appointed to administer and enforce the flood plain

management regulations of the community.

FLOOD PLAIN ELEVATIONS. The elevations established along waterbodies and in closed drainage basins which represent the hydraulic gradients for the predicted 25 Year and 100 Year Flood Plains. The 100 Year flood plain is shown on the adopted Marion County Flood Insurance Rate Maps. The elevations may be established by the Flood Plain Administrator or designee; by a Florida Licensed Surveyor and Mapper and approved by the Flood Plain Administrator or along the Rainbow River as established by Southwest Florida Water Management District Profiles dated July 13, 1973.

FLOOD PLAIN MANAGEMENT. The operation of an overall program of corrective and preventive measures for reducing flood damage and preserving and enhancing, where possible, natural resources in the flood plain, including but not limited to emergency preparedness plans, flood control works, flood plain management regulations, and open space plans.

FLOOD PLAIN MANAGEMENT REGULATIONS. This term describes Federal, State of Florida, or local regulations in any combination thereof and other applications of police power which control development in flood-prone areas, which provide standards for preventing and reducing flood loss and damage.

FLOODPROOFING. Any combination of structural and non-structural additions, changes, or adjustments to structures, which reduce or eliminate flood damage to real estate or improved real property, water and sanitary facilities, structures and their contents.

FLOODWAY. The channel of a river or other watercourse and the adjacent land areas that must be reserved in order to discharge the base flood without cumulatively increasing the water surface elevation more than a designated height.

FLOODWAY FRINGE. That area of the flood plain on either side of the regulatory floodway where encroachment may be permitted without additional hydraulic and/or hydrologic analysis.

FLOOR AREA. Area of all floors of buildings or structures, measured to the outside of the exterior walls.

FLOOR AREA RATIO (FAR). The gross floor area of all buildings or structures on a lot divided by the total lot area.

FOOD SERVICE FACILITIES. Any commercial facility that generates wastewater through the processing and preparation of food, including restaurants and other commercial facility where food is processed or prepared. It does not include facilities that only sell pre-processed or pre-packaged foods.

FREEBOARD. The additional height, usually expressed as a factor of safety in feet, above a flood level for purposes of flood plain management. Freeboard tends to compensate for many unknown factors, such as wave action, bridge openings and hydrological effect of urbanization of the watershed that could contribute to flood heights greater than the height calculated for a selected frequency flood and floodway conditions.

FRONT BUILDING LINE. A line measured between side lot lines no closer than the front setback and equal to the minimum lot width.

FUNCTIONALLY DEPENDENT USE. As it relates to the flood plain overlay zone, a use that cannot be used for its intended purpose unless it is located or carried out in close proximity to water, such as a docking or port facility necessary for the loading and unloading of cargo or passengers, shipbuilding or ship repair. The term does not include long-term storage, manufacture, sales, or service facilities.

GREEN SPACE. A parcel or area of land which is developed, planted, and maintained with trees, shrubs, groundcovers or grass or a combination thereof, and is reserved for a yard area, landscape area, public or private park or recreation area, drainage retention areas and other similar areas.

GROUND SIGN. A sign that is supported by one or more columns, upright poles, or braces extended from the ground or from an object on the ground, or that is erected on the ground, where no part of the sign is attached to any part of a building.

GROWTH SERVICES DIRECTOR. Growth Services Director or his designee.

HARDSHIP. As it relates to flood plain management and variances to the flood plain overlay zone, the

exceptional hardship associated with the land that would result from a failure to grant the requested variance. The community requires that the variance is exceptional, unusual, and peculiar to the property involved. Mere economic or financial hardship alone is not exceptional. Inconvenience, aesthetic considerations, physical handicaps, personal preferences, or the disapproval of one's neighbors likewise cannot, as a rule, qualify as an exceptional hardship. All of these problems can be resolved through other means without granting a variance, even if the alternative is more expensive, or requires the property owner to build elsewhere or put the parcel to a different use than originally intended.

HAZARD. A cross-connection or potential cross-connection which involves an actual or potential threat to the quality and/or potability of the water supplied by a public potable water system. The degree of hazard associated with any private water system shall be determined from an evaluation of the conditions existing within that system.

HEALTH HAZARD. A hazard involving any substance that could, if introduced into the public potable water system, cause death or illness, spread disease, or have a high probability of causing such effects.

HEAVY MACHINERY OR EQUIPMENT. Machinery used primarily by the construction, mining, well drilling, oil and gas industries and including overhead traveling cranes, hoists, and monorail systems for installation in factories, warehouses, marinas, and other industrial and commercial establishments.

HEIGHT OF BUILDING. The vertical distance from the established grade at the center of the front of the building to the highest point of the roof surface for a flat roof, to the deck line for a mansard roof and the height of the ridge for gable, hip, and gambrel roofs.

HIGH VOLUME IRRIGATION. An irrigation system (or zone) which utilizes heads or emitters with application rates higher than 0.5 gpm.

HIGHEST ADJACENT GRADE. The highest natural elevation of the ground surface, prior to the start of construction, next to the proposed walls of a structure.

HISTORIC STRUCTURE. Any structure that is:

A. Listed individually in the National Register of Historic Places (a listing maintained by the Department of Interior) or preliminarily determined by the Secretary of the Interior as meeting the requirements for individual listing on the National Register;

B. Certified or preliminarily determined by the Secretary of the Interior as contributing to the historical significance of a registered historic or a district preliminarily determined by the Secretary to qualify as a registered historic district;

C. Individually listed on the Florida Division of Historical Resources, Master Site File; or

D. Individually listed on a local inventory of historic places in communities with historic preservation programs that have been certified either:

(1) By a program approved by the Florida Division of Historical Resources, or

(2) Directly by the Secretary of the Interior.

HOME OCCUPATION. Any business or commercial activity that is:

A. Conducted within a single family dwelling unit in a residential zoning classification and is incidental to the principal residential use of the premises, or

B. Conducted on the same tract with the principal structure in an agricultural zoning classification, and

C. Which is a permitted use within the agricultural zoning classification and conducted without significantly adverse impact on the surrounding area.

HORIZONTAL DATUM. An accepted current coordinate system used to describe a point on the earth’s surface pre-approved by the Office of the County Engineer.

HOUSE OF WORSHIP. A structure whose principal use is public assembly for worship and teaching of religious concepts.

HOUSEHOLD PET. All animals which are normally considered as household pets and which can be maintained and cared for within the living space of a residence or outside the residence. Such animals may include but are not limited to dogs, cats, small reptiles, small rodents, fish, small birds such as parrots and parakeets, and other similar animals.

ILLUMINATED SIGN. A sign which contains a source of light or which is designed or arranged to reflect light from an artificial source including indirect lighting, neon, incandescent lights and backlighting.

IMPERVIOUS SURFACES. Those surfaces which do not absorb water including but not limited to, buildings, paved parking areas, driveways, roads, sidewalks, patios and any areas covered by brick, concrete, concrete pavers, or asphalt paving materials.

INDUSTRIAL/COMMERCIAL PARK. A tract of land that is planned, developed, and operated as an integrated facility for a number of individual industrial or commercial or mixed uses.

INFRASTRUCTURE. Facilities and services needed to sustain residential, commercial, and industrial activities. Infrastructure includes, but is not limited to, water and sewer, streets, street signage, drainage, parks and open space, and other public facilities.

INSTITUTIONAL USE. A nonprofit, religious, or public use, such as a church, library, public or private school, hospital, community home, convalescent home, adult congregate living facility, or government owned or operated building, structure, or land used for public purpose or benefit.

INTENSIVE RECREATIONAL AREAS. Sites which provide location for uses such as football, baseball, softball, soccer, and golf courses excluding such areas as secondary and tertiary roughs and out-of-bound areas. Only such sports related fields shall fit this definition while common areas and open spaces between such fields shall not be exempt from irrigation design standards or watering restrictions.

IRRIGATION. The application of water by man-made means to plant material and turfgrass.

JUNK. Used and discarded machinery, scrap, iron, steel, other ferrous and non-ferrous metals, inoperative vehicles, tools, implements or portions thereof, glass, plastic, cordage, building materials, or other waste.

JUNK YARD. A parcel of land on which junk is collected, stored, salvaged or sold, including automobile recycling facilities.

KARST FEATURE. A landform that has been modified by dissolution of soluble rock, including limestone or dolostone. These include springs, spring runs, sinkholes, solution pipes, swallets and swallow holes. A directly or indirectly connected karst feature is one where no confining layer of sediment exists to prevent runoff from directly or indirectly entering the Floridan Aquifer system.

KENNEL. Any place or premises where four or more dogs or cats, over four months of age are groomed, bred, raised, boarded, or trained for compensation or income.

LANDSCAPABLE AREA. The entire parcel less the building footprint, natural water features, surfaced and un-surfaced driveways and parking areas, road rights-of way, hardscapes such as decks and patios, and other non-planted areas. Landscapable area excludes golf course play areas, other intensive recreation areas (e.g. soccer fields, ball diamonds, etc.) and any part of a constructed stormwater management system that has a design stage or storage depth three feet or greater.

LANDSCAPE ARCHITECT. The County's Landscape Architect or his designee.

LANDSCAPE ISLAND. A raised area, usually curbed, placed to guide traffic and separate lanes, and used for landscaping, signing, or lighting.

LEASABLE/INTERIOR AREA. The area of open floor space within a structure's exterior walls and excluding the interior walls.

LEVEL OF SERVICE. An indicator of the extent or degree of service provided by, or proposed to be provided by, a facility based on and related to the operational characteristics of the facility. Level of service indicates the capacity per unit of demand for each public facility.

LEVEL OF SERVICE STANDARD. The level of service a facility is not to exceed as established in the

Comprehensive Plan.

LISTED SPECIES. Those species identified by the USFWS and/or FWC as endangered, threatened, or special concern.

LIVESTOCK. Includes, but is not limited to, all animals of the equine, ratite, bovine, or swine class, including goats, sheep, mules, horses, llamas, alpacas, hogs, cattle, poultry, emus, ostriches, and other grazing animals. The term livestock shall specifically exclude ~~exotic~~ specialty animals.

LOCALLY SIGNIFICANT NATURAL RESOURCES. Lands or areas which include environmentally sensitive lands or other features and/or characteristics as identified by Comprehensive Plan Conservation Element Policy 1.1.2.

LOT. A designated parcel, tract, or area of land established by a plat or otherwise as permitted by law and to be used, developed, or built upon as a unit.

LOT AREA. The size of a lot measured within the lot lines and expressed in terms of acres or square feet.

LOT DEPTH. The dimension from the center of the front of the lot to the center of the rear of the lot.

LOT LINE. The boundary line of a lot.

A. LOT LINE, FRONT. The line abutting the street right-of-way or point of access which for corner lots shall be determined by the property owner.

B. LOT LINE, REAR. The lot line opposite to and most closely paralleling the front lot line.

C. LOT LINE, SIDE. Any lot line other than a front or rear lot line.

LOT WIDTH. The horizontal distance between the side lot lines measured at the front property line. For lots located on a curve, it shall be the chord distance of the curve at the front property line.

LOW VOLUME IRRIGATION. Irrigation by a system which utilizes devices that irrigate at rates of 0.5 gpm or less, allowing water to be placed with a high degree of efficiency at the root zone of each plant.

LOWEST ADJACENT GRADE. The lowest elevation, after the completion of construction, of the ground, sidewalk, patio, deck support, or basement entryway immediately next to the structure.

LOWEST FLOOR. The lowest floor of the lowest enclosed area (including basement). An unfinished or flood resistant enclosure, usable solely for parking of vehicles, building access or storage, in an area other than basement area, is not considered a building's lowest floor provided that such enclosure is not built so as to render the structure in violation of the non-elevation design requirements of the Flood Plain Overlay Zone in Article 5.

MANUFACTURED BUILDING. A structure bearing a seal issued by the Florida Department of Community Affairs certifying that it is built in compliance with the requirements of the Florida Manufactured Building Act of 1979.

MANUFACTURED HOME. A structure bearing a label certifying that it is built in compliance with the Federal Manufactured Housing Construction and Safety Standards (24 CFR 3280) HUD Code.

MANUFACTURED HOME/MOBILE HOME PARK OR SUBDIVISION. A parcel (or contiguous parcels) of land divided into two or more manufactured home lots for rent or sale.

MANUFACTURED HOME PARK OR SUBDIVISION, EXISTING. As it relates to the Flood Plain Overlay Zone, a manufactured home park or subdivision for which the construction of facilities for servicing the lots on which the manufactured homes are to be affixed (including, at a minimum, the installation of utilities, the construction of streets, and either final site grading or the pouring of concrete pads) was completed before January 19, 1983.

MANUFACTURED HOME PARK OR SUBDIVISION, NEW. As it relates to the Flood Plain Overlay Zone, a manufactured home park, or subdivision, for which the construction of facilities for servicing the lots on which the manufactured homes are to be affixed (including at a minimum, the installation of utilities, the construction of streets, and either final site grading or the pouring of concrete pads) and was completed on or after January 19, 1983.

MANUFACTURING. A commercial or industrial activity involved in the research, development, assembly,

production, testing, or processing of goods, materials, components, devices, equipment, or systems.

MARINA. A premises located adjacent to water bodies, canals, or water ways providing wet or dry storage and all accessory facilities.

MARION-FRIENDLY LANDSCAPING. The use of plants (and non-plant materials such as mulch) and landscape designs and practices that are compatible with the natural environment and climate of Marion County. Marion-Friendly Landscaping minimizes the use of turfgrass that is irrigated and fertilized, and maximizes the use of plants that tolerate sandy soils and drought conditions characteristic of north-central Florida.

MARION-FRIENDLY LANDSCAPING AREA (MFLA). That portion of a new or expanded development that through the approved development plans, documents, and deed restrictions, is identified to be maintained as Marion-Friendly Landscaping and where the use of high volume irrigation, non-drought tolerant plants, and lawn chemicals (fertilizers and pesticides) on turfgrass is prohibited.

MARKET VALUE. As it relates to Flood Plain Overlay Zone, the building value, which is the property value excluding the land value and that of the detached accessory structures and other improvements on site (as agreed to between a willing buyer and seller), as established by what the local real estate market will bear. Market value can be established by an independent certified appraisal (other than a limited or curbside appraisal, or one based on income approach), actual cash value (replacement cost depreciated for age and quality of construction of building), or adjusted tax-assessed values.

MARQUEE. A structure projecting from and supported by a building which extends beyond the building line or property line and fully or partially covers a sidewalk, public entrance, or other pedestrian way.

MCUD DIRECTOR. Marion County Utilities Department Director, or his designee.

MINI-WAREHOUSE (SELF-SERVICE STORAGE FACILITY). A building, or group of buildings, consisting of individual, small, self-contained units that are leased or owned for the storage of business and household goods or contractors supplies.

MOBILE HOME. A transportable structure designed to be:

A. Used as a year-round residential dwelling, built prior to enactment of the Federal Manufactured Housing Construction and Safety Standards, which became effective for all manufactured home construction on June 15, 1976, and
B. Any vehicle without independent motive power which is designed for housing accommodations and transportation over the highways on a chassis under carriage, which is an integral part thereof, but does not include travel trailers or recreational units as defined by § 320.01 FS. This definition shall include any unit which meets the criteria above and is certified by the Department of Safety and Motor Vehicles as meeting requirements of (USAS) A-119.2 as prescribed in Ch. 320 FS.

MODEL HOME. A single-family dwelling unit, or units, used by a home builder to illustrate the features available to a potential purchaser of a dwelling unit when constructed on a different lot, parcel, or tract.

MODEL HOME SALES LOT OR MODEL HOME COMPLEX. Model homes designed in a cluster to create a sales facility.

MODIFY. Regarding towers, modify shall include all structural changes to a tower other than routine maintenance, including, without limitation, structural modifications, rebuilding, or relocating on the same parcel. Modify does not include adding additional or different antennas, or deleting or removing antennas.

MONOPOLE TOWER. A tower consisting of a single pole, or spine, self supported by a permanent foundation, and constructed without guy wires and ground anchors.

MULTI-FAMILY. Any residential development project that consists of more than two dwelling units per building, or eight dwelling units or more per gross acre.

MULTI-DWELLING. A structure which contains three or more dwelling units.

MULTIPLE OCCUPANCY COMPLEX. A commercial occupancy (i.e. any occupancy other than residential or agricultural) consisting of a parcel of property, or parcel of contiguous properties, existing as a unified or

coordinated project, with a building or buildings housing more than one occupant, or more than one business under one ownership.

NATIVE TREE. A self-supporting woody plant which normally grows to a height of ten feet or more and which is classified as native vegetation.

NATIVE VEGETATION. Those species occurring within the state boundaries prior to European contact, according to the best available scientific and historical documentation. It includes those species understood as indigenous, occurring in natural associations and habitats that exist prior to significant human impacts.

NATURAL AREA. Undeveloped lands considered to be in, or maintained in, an undisturbed or unmodified condition which provide habitat or natural open space.

NET BUILDABLE SITE AREA. The net buildable site area is that part of the base site area remaining for development after the open space has been subtracted.

NIGHTCLUB. A bar or similar establishment providing food, refreshments, or alcoholic beverages wherein dancing is permitted or paid entertainment is provided.

NONCONFORMING LOT. A lot of record which does not conform to the current minimum requirements for a lot in the zoning classification in which it is located.

NONCONFORMING STRUCTURE. A building or structure which does not conform to the current minimum requirements for such structure in the zoning classification in which it is located.

NONCONFORMING USE. A use which is not a permitted use, or special use, in a current zoning classification.

NON-CONTIGUOUS PARCELS. Those parcels that do not have any common property lines, or which are separated by platted or unplatted roads, streets, or alleys which have been dedicated for public use, or prescriptive easements for road right-of-way purposes.

NORTH AMERICAN VERTICAL DATUM (NAVD) OF 1988. The vertical control datum of orthometric height established for vertical control surveying in the United States of America based upon the General Adjustment of the North American Datum of 1988.

OCCUPANT (OCCUPANCY). One who has certain legal rights to or control over the premises he occupies; the state of being an occupant.

OFF-SITE SIGN. A sign that identifies or communicates a commercial or non-commercial message related to an activity conducted, or service rendered, or a commodity sold at a location or on a parcel other than where the sign is located.

ON-SITE SIGN. A sign that identifies or communicates a commercial or non-commercial message related to an activity conducted, service rendered, or a commodity sold, at the location where the sign is installed.

ON-SITE SEWAGE TREATMENT AND DISPOSAL SYSTEM (OSTDS). Also referred to as a septic system.

OPEN BASIN. All watersheds not meeting the definition for Closed Basin.

OPEN SPACE. Land area restricted or not developed depending on its designation as natural open space or improved open space consistent with the provisions of Section 6.7.6.

ORDINARY HIGH WATER LINE (OHWL). The highest reach of a navigable, nontidal waterbody as it usually exists when in its ordinary condition and is not the highest reach of such waterbody during the high water season or in times of freshets. The term also includes the terms “ordinary high-water line” and “line of ordinary high water.”

OUTSIDE STORAGE. The storage or display, outside of a completely enclosed building, of merchandise offered for sale or rent as a permitted use or of equipment, machinery, and materials used in the ordinary course of a permitted use.

OWNER. The person, firm, corporation, or governmental unit holding title of the real estate upon which construction is to take place.

PACKAGE STORE. A premises in which alcoholic beverages are sold for off-premises consumption.

PARCEL. A continuous quantity of land in the possession of or owned by, or recorded as the property of the same person or persons. A parcel may consist of contiguous platted lots.

PARCEL OF RECORD. A designated parcel, tract, or area of land established by plat, metes and bounds description, or otherwise permitted by law, to be used, developed or built upon as a unit, which complies with the applicable building codes and zoning regulations, and which existed on or before January 1, 1992, and under one ownership as of August 11, 1993.

PARK. Land which is used for active or passive recreational purposes, whether dedicated public or private.

PARK MODEL. A transportable unit which has a body width not exceeding 14 feet and which is built on a single chassis and is designed to provide seasonal or temporary living quarters when connected to utilities necessary for operation of installed fixtures or appliances or; a park trailer constructed to ANSI A-119.5 standards which does not exceed 400 square feet gross floor area or; a park trailer constructed to U.S. Department of Housing and Urban Development Standards which does not exceed 500 square feet gross floor area.

PARKING AREA. An open area, other than a street or other public way, used for the parking of motor vehicles.

PARKING LANE. A lane located on the side of a street, designed to provide on-street parking of a motor vehicle.

PARKING SPACE. An area provided for the parking of a motor vehicle.

PASSIVE RECREATION. Those recreational activities afforded by such natural resources as the native flora, fauna, and aesthetic appeal of a natural setting and requiring minimal development to utilize and enjoy such resources. These activities include hiking, nature watching, unstructured play, picnicking, horseback riding and bicycle riding.

PERMEABILITY. The capacity of a porous medium for transmitting water.

PLANNED UNIT DEVELOPMENT (PUD). A designated contiguous area of property for the comprehensive development of a single use or of mixed uses.

PLANNING/ZONING MANAGER. Planning /Zoning Manager or designee.

PLAT. A map, or delineated representation of the subdivision of lands, being a complete exact representation of the subdivision and complying with this Code and Ch. 177 FS.

PLAYGROUND. Properties and facilities owned and operated by any governmental agency, or owned and operated by any private agency, including day care centers, which are open for recreational or child care purposes.

POINT OF CONNECTION. The outlet side of the meter designated to serve the customer.

PORTABLE SIGN. Any sign which is designed to be transported by trailer or on its own wheels, including such signs whose wheels have been removed and the remaining chassis or support structure converted to an A- or T- frame sign and anchored temporarily to the ground.

POTABLE WATER. Water that is suitable for human consumption.

POTENTIOMETRIC SURFACE (POTENTIOMETRIC HEAD). The level to which water would rise in a tightly cased well penetrating an aquifer. The water table and artesian pressure surfaces are particular potentiometric surfaces.

PRESSURE VACUUM BREAKER ASSEMBLY: A backflow prevention assembly which includes an independently operating, internally loaded check valve; an independently operating, loaded air inlet valve located on the discharge side of the check valve; and properly located test cocks and tightly closing resilient-seated shut-off valves attached at each end of the Assembly. This assembly shall not be used if back pressure could develop in the downstream piping.

PRINCIPAL STRUCTURE. A structure on a lot or parcel which is used, arranged, adapted or designed for the predominant or primary use for which the lot or parcel is or may be used.

PRINCIPAL USE. The primary or predominant use of a lot, parcel, structure, or structure and land in combination.

PRIVATE CLUB. A premises used for meetings or activities of persons in which use is restricted to members and guests.

PRIVATE PERFORMANCE. As it relates to the adult entertainment business, modeling, posing or the display or exposure of any specified anatomical area by an employee or independent contractor using the premises under a contract or lease, of an adult entertainment establishment to a person other than an employee while the person is in an area within the establishment not accessible during such display to all other persons in the establishment, or while the person is in an area in which the person is totally or partially screened or partitioned during such display from the view of all persons within the establishment.

PROGRAM DEFICIENCY. As it relates to the flood plain overlay zone, a defect in the community's flood plain management regulations or administrative procedures that impairs effective implementation of those flood plain management regulations or of the standards required by the National Flood Insurance Program.

PROHIBITED CONNECTION. Any connection of an unsafe system to a safe system as deemed by the MCUD.

PROJECT AREA. The limits of the land area identified on a plan where project improvements and features are proposed.

PUBLIC ACCESS REUSE. The application of reclaimed water to an area that is intended to be accessible to the general public; such as golf courses, cemeteries, parks, landscape areas, hotels, motels, and highway medians. Public access areas include private property that is not open to the public at large, but is intended for frequent use by many persons. Public access areas also include residential dwellings. Presence of authorized farm personnel or other authorized treatment plant, utilities system, or reuse system personnel does not constitute public access. Irrigation of exercise areas and other landscape areas accessible to prisoners at penal institutions shall be considered as irrigation of public access areas.

PUBLIC AREAS. Areas such as parks, playgrounds, trails, paths and other recreation areas and open spaces; scenic and historic sites; schools and other properties, buildings and structures which have been or will be conveyed or dedicated to the County or other public body.

PUBLIC FACILITIES. Transportation systems or facilities, sewer systems or facilities, solid waste systems or facilities, drainage systems or facilities, potable water systems or facilities, schools, and parks and recreation systems or facilities. This includes privately operated sewer and water systems that are classified as public systems.

PUBLIC POTABLE WATER SUPPLY SYSTEMS. Wells, treatment systems, disinfection systems, reservoirs or other storage and high service pumps, pipes, lines, valves, meters, water mains, laterals, and services, used or having the present capacity for future use in connection with the obtaining and supplying of potable water for domestic consumption, fire protection, irrigation, consumption by business, or consumption by industry. Without limiting the generality of the foregoing definition, the system shall embrace all necessary appurtenances and equipment and shall include all property, rights, easements and franchises relative to any such system and deemed necessary or convenient for the operation thereof.

PUBLIC SAFETY AND NUISANCE. As it relates to the flood plain overlay zone, anything which is injurious to safety or health of the entire community or a neighborhood, or any considerable number of persons, or unlawfully obstructs the free passage or use, in the customary manner, of any navigable lake, or river, bay, stream, canal, or basin.

QUALIFYING NATURAL AREA/COMMUNITY. Those lands identified by the FDEP and the Florida Natural Areas Inventory (FNAI) produced by FDEP as significant areas which are relatively undisturbed and include flora or fauna that reflect the conditions of the area at the time colonial settlement occurred in Florida and Marion County.

RAPID-RATE LAND APPLICATION (RRLA). The use of percolation ponds or rapid infiltration basins (RIBs) or subsurface absorption fields, as described in Ch. 62 FAC.

RECEIVING AREA. Lands designated by one or more of Marion County’s Transfer of Rights Programs (TRPs) as eligible to receive Transferrable Credits (TDCs) for use in adding residential dwelling units in conjunction with

or in addition to other permitted development activity on the designated lands wherein the lands are depicted on Marion County Comprehensive Plan Future Land Use map Series Map 1, *Marion County 2035 Future Land Use Map*, or Map 13, *Transfer of Rights*.

RECLAIMED WATER. Water that has received at least advanced secondary treatment and high level disinfection. Water receiving additional treatment may be used in public access areas, when in compliance with the FDEP requirements pursuant to § 62-610 FAC.

RECORDED SUBDIVISION. A platted subdivision of lands, approved by the Board of County Commissioners, which has a final plat recorded in the public records of Marion County consistent with this Code and Ch. 177 FS.

RECREATION VEHICLE PARK. A tract of ground upon which three or more single-family camp cottages, tents or recreational vehicles are located or maintained for accommodation of transients whether or not a charge is made.

RECREATIONAL FACILITY. Any public or private structure or facility used for active recreational pursuits, including such facilities as golf courses, tennis courts, racquetball courts, handball courts, baseball fields, soccer fields, football fields, basketball courts, swimming pools, jogging or exercise trails, and similar facilities.

RECREATIONAL VEHICLE. Any vehicle-type unit, primarily designed as temporary living quarters for recreational, camping or travel use, which either has its own motive power or is mounted on or drawn by another vehicle. Said vehicles shall include travel trailer and fifth wheel travel trailer, camping trailer, truck camper, motor home van conversion and the park trailer as defined by USDOT.

REDUCED-PRESSURE PRINCIPLE ASSEMBLY. A Backflow Prevention Assembly which includes two independently acting check valves; a hydraulically operating, mechanically independent pressure differential relief valve located both between the check valves and below the first check valve; and properly located test cocks and tightly closing resilient-seated shut-off valves attached at each end of the Assembly.

REGISTERED DIVISIONS OF LAND. A map or survey of divisions of land three acres or larger in size, including "flag lots" as that term is commonly known in Marion County, and which was filed and accepted by Marion County prior to January 1, 1992.

REGULATED USES OR ADULT AND SEXUALLY-ORIENTED BUSINESS. Uses such as but not limited to adult book store or film store, adult booth, adult cabaret, and adult theater or mini-motion theater or drive-in.

REGULATORY FLOODWAY. The channel of a river or other watercourse and the adjacent land areas that must be reserved in order to discharge the base flood without cumulatively increasing the water surface elevation more than a designated height.

REMEDY A DEFICIENCY OR VIOLATION. As it relates to the flood plain overlay zone, to bring the regulation, procedure, structure or other development into compliance with State of Florida, Federal or local flood plain management regulations; or if this is not possible, to reduce the impacts of its noncompliance. Ways the impacts may be reduced include protecting the structure or other affected development from flood damages, implementing the enforcement provisions of the Flood Plain Overlay Zone in Article 5 or otherwise deterring future similar violations, or reducing Federal financial exposure with regard to the structure or other development.

REMODELING. Any change, partial removal, partial replacement, or addition to buildings.

RESIDENTIAL DUAL CHECK. A compact, mechanical Backflow Prevention Device manufactured with two independently acting, spring actuated check valves.

RESIDENTIAL SERVICE ADDRESS. A metered residential address whose private water systems serve only residential dwellings the total of which is designed to house no more than four families.

RESIDENTIAL USES. One-family dwellings, two-family dwellings, and multi-family dwellings.

RESIDUALS. Biosolids from a permitted wastewater treatment or water reuse facility and septage from an OSTDS.

RETAIL SALES. Any business activity, and related services, customarily selling goods and commodities for profit.

RETAINING WALL. A structure erected between lands of different elevation to protect structures or to prevent the loss of earth from the upper slope level.

RIVERINE. Relating to, formed by, or resembling a river (including tributaries), stream, brook, etc.

ROOF LINE. A horizontal line intersecting the highest point or points of a roof.

ROOF SIGN. A sign placed above the roof line of a building or on or against a roof slope of less than 45 degrees as measured from the vertical plane.

RUNOFF. The surface flow of stormwater.

RURAL AREA. Lands located outside the Urban Growth Boundary (UGB) as designated by the Comprehensive Plan Future Land Use Map Series Map 1 *Marion County 2035 Future Land Use Map* excluding those lands bearing an Urban Area land use designation as specified in Comprehensive Plan Future Land Use Element Appendix A, Table A-1 *Land Use Classifications and Standards.*

SAFE YIELD. The overage annual amount of groundwater that could be extracted from a groundwater basin (or reservoir) over a long period of time without causing a long term reduction of groundwater quantity, quality, or other undesirable impacts.

SCHOOL. A public or private educational institution offering students an academic curriculum, including kindergartens, elementary schools, middle schools, high schools, colleges and universities. Such term shall also include all adjacent properties owned and used by such schools for education, research, maintenance, or recreational purposes.

SCREEN. A structure or planting consisting of fencing, walls, berms, trees, or shrubs which provides sight obstruction within or to a site or property.

SEMICONFINED AQUIFER. An aquifer that receives recharge in the form of leakage through underlying or overlying semipermeable formations (aquitards).

SENDING AREA. Lands designated by one or more of Marion County's Transfer of Rights Programs (TRPs) as eligible to obtain Transferrable Credits (TDCs) which may be transferred or conveyed to a site within a designated Receiving Area where the TDCs may be used for development.

SETBACK (OR SETBACK LINE). An area defined by a lot line, street centerline, wetland line, water boundary setback line of an open body of water, or right-of-way line and a line on a lot parallel to, and a specified distance from said lines in which area no structure may be located and into which no part of any structure shall project, unless specifically permitted in this Land Development Code. Setbacks shall be measured from lot lines unless specifically stated otherwise or unless the context in which the term is used implies another intended meaning.

A. FRONT SETBACK. That area defined by the front lot line and a parallel line on the lot a specified distance from such front lot line.
B. SIDE SETBACK. An area located between a front yard setback and a rear yard setback, defined by a side lot line and a parallel line on the lot a specified distance from such side lot line.
C. REAR SETBACK. That area defined by the rear lot line and a parallel line on the lot a specified distance from such rear lot line.

SIGHT TRIANGLE. A triangular-shaped portion of land established at street intersections in which nothing is erected, placed, planted or allowed to grow in such a manner as to limit or obstruct the sight distance of motorists approaching or at the intersection.

SIGN. Any structure, or part thereof, or any device attached to a structure or applied to any surface or object, for visual communication, embodying letters, numerals, symbols, figures, flag, banner, pendant or designs in the nature of an announcement, direction, or advertisement, directing attention to an object, products, place, activity, service, person, institution, organization, or business and which is visible from any public street, alley, waterway, or public place. This definition of a sign shall not include any flag, notice badge, or ensign of any

government or governmental agency, or any legal notice posted by and under governmental authority.

SIGN FACE AREA OR SIGN AREA. The area of any regular geometric shape which contains the entire surface area of a sign upon which copy may be placed.

SIGN STRUCTURE. Any construction used or designed to exclusively support a sign.

SINKHOLE. A landform created by subsidence of soil, sediment or rock as underlying strata are dissolved by ground water. Sinkholes may be directly or indirectly connected to the aquifer or disconnected by the presence of a confining layer of soil (clay) or rock that no longer allows water to permeate below this layer. The later may be expressed as a relic sinkhole or lake, depression in the land surface, or loose soils in the subsurface.

SLOW-RATE LAND APPLICATION (SRLA). The application of reclaimed water to a vegetated land surface using an overhead or spray, or subsurface drip, Irrigation system, as defined in §§ 62-610.400 and 62-610.450 FAC.

SOLUTION PIPE. A naturally occurring vertical cylindrical hole attributable to dissolution, often without surface expression and much narrower circumference than a sinkhole.

SPECIAL FLOOD HAZARD AREA (SFHA). The land in the flood plain within a community subject to a one percent or greater chance of flooding in any given year.

SPECIAL USE. A use that would not be appropriate generally or without restriction throughout the particular zoning classification but which, if controlled as to number, area, location, or compatibility with the surrounding area, would not adversely affect the public health, safety, and general welfare.

SPECIAL USE PERMIT (SUP). A permit for a use that would not be appropriate generally or without restriction throughout the particular zoning classification but which, if controlled as to number, area, location, or compatibility with the surrounding area, would not adversely affect the public health, safety, and general welfare.

SPECIALTY ANIMALS. All animals including native and imported animals which have been, removed from the wild or, animals being bred, raised or kept for research, food, fur, skins, or for the production of income and/or, animals requiring a permit or license from the State Fish and Wildlife Conservation Commission or the U.S. Fish and Wildlife Service shall be regulated by Special Use Permit. Large reptiles are included in this category. Where nine or more animals are being kept as household pets, and do not meet the above listed requirements or the below listed exclusions, they shall be treated as specialty animals and regulated by Special Use Permit. Specialty animals shall not include livestock, dogs, cats or homing/racing pigeons meeting the requirements of Article 4.

SPECIFIC CAPACITY. The ratio of well discharge to the drawdown produced, measured inside the well (gpm/ft of drawdown).

SPECIFIED ANATOMICAL AREAS. As it relates to the adult entertainment business:

A. Less than completely and opaquely covered:
   (1) Human genitals;
   (2) Pubic region;
   (3) Buttock; or
   (4) Female breast below a point immediately above the top of the areola; or
B. Human male genitals in a discernibly turgid state, even if completely and opaquely covered.

SPECIFIED SEXUAL ACTIVITIES. As it relates to the adult entertainment business:

A. Human genitals in a state of sexual stimulation or arousal;
B. Acts of human masturbation, sexual intercourse or sodomy; and
C. Fondling or other erotic touching of human genitals, pubic region, buttock or female breast.

SPRINGS PROTECTION ZONE (SPZ). An area surrounding designated springs within Marion County establishing design and development criteria intended to maintain and support the continued existence and quality of the

designated springs, and divided into Primary and Secondary areas pursuant to Article 5.

START OF CONSTRUCTION. As it relates to the flood plain overlay zone, for other than new construction or substantial improvements under the Coastal Barrier Resources Act P. L. 97-348, includes substantial improvement, and means the date the building permit was issued, provided the actual start of construction, repair, reconstruction, or improvement was within 180 days of the permit date. The actual start means the first placement of permanent construction of a building (including a manufactured home) on a site, such as the pouring of slabs or footings, installation of piles, construction of columns, or any work beyond the stage of excavation or placement of a manufactured home on a foundation. Permanent construction does not include land preparation, such as clearing, grading and filling; nor does it include the installation of streets and/or walkways; nor does it include excavation for a basement, footings, piers or foundations or the erection of temporary forms; nor does it include the installation on the property of accessory buildings, such as garages or sheds not occupied as dwelling units or not part of the main building. For substantial improvement, the actual start of construction means the first alteration of any wall, ceiling, floor, or other structural part of a building, whether or not that alteration affects the external dimensions of the building.

STATIC LEVEL. The stabilized water level in a nonpumped well.

STOCKPILE. As it relates to the springs protection zone, animal manure, including droppings, urine, and soiled bedding material, that is piled, spread, or otherwise allowed to accumulate to such depth and/or volume in excess of three cubic yards that it: a) prevents or substantially hinders the growth of grass or other vegetation, and/or b) generates leachate that can potentially contaminate ground or surface water. Manure that is spread on pasture or cropland areas in accordance with normal agronomic practices following UF/IFAS recommendations and this Section is not considered stockpiling.

STORAGE COEFFICIENT. The volume of water that an aquifer releases from or takes into storage per unit surface area of aquifer per unit change in the component of head normal to that surface. In a water table aquifer the storage coefficient is essentially the same as its porosity.

STORM CELLAR. A place below grade used to accommodate occupants of the structure and emergency supplies as a means of temporary shelter against severe tornadoes or similar windstorm activity.

STREET. A public or private travelway used or intended to be used, for passage or travel by vehicles.

STREET FRONTAGE. The distance along the property line at the right-of-way or easement of the street providing primary access and exposure to the existing or proposed development.

STRUCTURE. Anything constructed or built which is located on or under land. For flood plain management purposes, a walled and roofed building, including gas or liquid storage tank that is principally above ground, as well as a manufactured home.

STUB STREET. A portion of a street for which an extension has been proposed and approved. May be permitted when development is phased over a period of time, but only if the street in its entirety has been approved in the preliminary plan.

SUBDIVISION. The division of land into three or more lots, tracts, parcels, tiers, blocks, sites, units or any other division of land; and may include establishment of new streets and alleys, additions, and re-subdivisions or replats; and, when appropriate to the context, relates to the process of subdividing or to the lands or area subdivided.

SUBSTANTIAL DAMAGE. Damage of any origin sustained by a structure whereby the cost of restoring the structure to its before-damaged condition would equal or exceed 50 percent of the market value of the structure before the damage occurred.

SUBSTANTIAL DEVELOPMENT. As it relates to vested rights, shall mean that required permits for commencement of construction have been obtained; and permitted clearing and grading has commenced on any significant portion of the development subject to a single final local development order; and the actual construction of water and sewer lines, or streets, or the stormwater management system, on said portion of the development is substantially complete or is progressing in a manner that significantly moves the entire

development toward completion.

SUBSTANTIAL IMPROVEMENT. Any reconstruction, rehabilitation, addition, or other improvement of a structure, the cumulative cost of which equals or exceeds 50 percent of the market value of the structure before the "start of construction" of the improvement. This term includes structures that have incurred "substantial damage" regardless of the actual repair work performed. This term does not, however, include any repair or improvement of a structure to correct existing violations of State of Florida or local health, sanitary, or safety code specifications, which have been identified by the local code enforcement official prior to the application for permit for improvement, and which are the minimum necessary to assure safe living conditions.

SWALLET OR SWALLOW HOLE. A place where water disappears underground in a limestone fissure or opening at or near the surface. A swallow hole generally implies water loss in a closed depression or sinkhole, whereas a swallet may refer to water loss from a disappearing stream or streambed, even though there may be no depression.

TEST WELL. Completed well for pumping used to obtain information on capacity, groundwater quality, geologic and hydrologic conditions, and related information.

TOTAL NITROGEN (TN). As a measurement of wastewater effluent quality, Total Nitrogen is the total content of the nitrogen species of organic nitrogen, ammonia, nitrate and nitrite expressed as elemental nitrogen, N, as determined using approved methods.

TOWER. A lattice, guyed or monopole structure constructed from grade which supports antennas. The term "tower" shall not include the singular use as a amateur radio operator's equipment, as licensed by the FCC, or antenna support structures and/or towers which are less than 50 feet in height and are used only to support antennas which receive, but do not transmit television signals.

TOWER CLUSTERING. The location of two or more towers on a parcel of property.

TRANSFER OF RIGHTS PROGRAM (TRP). A program which awards or grants to a property owner Transferrable Development Credits (TDCs) which may then be transferred or conveyed to a party that may use the TDCs for the development of lands deemed eligible by Marion County.

TRANSFERRABLE DEVELOPMENT CREDIT (TDC). A residential unit equivalent which may be granted to lands within eligible Sending Areas for subsequent transfer/sale between parties wherein the TDC is used by the receiving party to provide for additional residential development on lands eligible for use in a designated Receiving Area.

TRANSMITTER TOWER. A structure designed, constructed or used for the sole purpose of broadcasting or retransmitting any form of radio, television, radar, microwave, or other type of electronic wave, or impulse.

TREE. Any self-supporting woody plant which has at least one main trunk, and is normally grown to an overall height of a minimum of ten feet.

TREE REMOVAL. To physically remove a tree, including the performance of any act by a property owner or his designated agent, on a particular parcel of record which causes the death of a tree, or the effective removal of a tree through damage.

TURFGRASS. A mat layer of monocotyledonous plants, including but not limited to Bahia, Bermuda, Centipede, Paspalum, St. Augustine, and Zoysia grasses.

TWO-FAMILY DWELLING. A structure containing two dwelling units.

UNIT. That part of a multiple occupancy complex housing one occupant or use.

UNRECORDED SUBDIVISION. A platted subdivision of lands which has been accepted by the Board of County Commissioners for filing only by the Clerk of the Court in the public records of Marion County. Said plats were prepared and filed prior to August 14, 1970, in the public records of Marion County in record books entitled "Unrecorded Subdivisions."

URBAN AREA. Lands located within the Urban Growth Boundary (UGB) as designated by the Comprehensive

Plan Future Land Use Map Series Map 1 Marion County 2035 Future Land Use Map or those lands located in the Rural Area bearing an Urban Area land use designation as specified in Comprehensive Plan Future Land Use Element Appendix A, Table A-1 Land Use Classifications and Standards.

URBAN GROWTH BOUNDARY (UGB). The boundary established by Marion County Comprehensive Plan Future Land Use map Series Map 1, Marion County 2035 Future Land Use Map, which identifies the geographic area wherein higher density and intensity development and full urban services are intended to be concentrated.

UTILITY. The individuals and/or legal entities which own and are responsible for the operation and maintenance of public or private utility services such as potable water, wastewater, phone, cable, electric, etc.

VARIANCE. As it relates to the zoning requirements of this Code, a grant of relief to a particular property owner because of the practical difficulties or unnecessary hardship that would be imposed by the strict application of that zoning provision of the Code.

VEHICLE SIGN. Any sign affixed to a vehicle.

VERTICAL DATUM. An accepted reference or basis for elevations pre-approved by the Office of the County Engineer.

VESTED RIGHTS. The authorization to improve and/or develop properties meeting the conditions established in Division 1.7.

VIOLATION. The failure of a structure or other development to be fully compliant with the requirements of a specific provision of this Code.

WAIVER. A grant of relief from compliance with a specific provision of this Code, not zoning related, granted to a particular property owner because of financial hardship or alternate design concept.

WASTEWATER. Any substance that contains any of the waste products, excrement, or other discharge from the bodies of human beings or animals as well as such other wastes as normally emanate from dwelling houses.

WASTEWATER SERVICE LATERAL. Those service laterals or force mains from the customer's property line to the wastewater main and all appurtenances.

WASTEWATER SYSTEM. A centralized or decentralized system for the collection and treatment of domestic wastewater and disposal of reclaimed effluent. A wastewater system includes without limitation the collection lines, wastewater treatment facility, pumping stations, intercepting sewers, force mains, and all necessary appurtenances and equipment and shall include all property, rights, easements, and franchises relating to any such system and deemed necessary or convenient for the operation thereof.

WASTEWATER TREATMENT FACILITY (WWTF). The facility at which the raw wastewater is collected and treated.

WATER BOUNDARY SETBACK LINE (WBSL). Unless previously established by Board action, the Water Boundary Setback Line is the normal or average reach of a water body during the high water season. However, on low, flat-banked water bodies where there is no well-defined mark, the boundary is located at the point up to which the presence and action of the water is so continuous that the cultivation of ordinary agricultural crops is prevented.

WATERCOURSE. A lake, river, creek, stream, wash, channel or other topographic feature on or over which waters flow at least periodically. Watercourse includes specifically designated areas in which substantial flood damage may occur.

WATER DETENTION AREA (WDA). A manmade or natural facility which collects surface or subsurface water and which impedes its flow and releases the same gradually at a rate not greater than that prior to the development of the property, into natural or manmade outlets.

WATER FRONTAGE OR WATER FRONT. That side of a lot, parcel or tract abutting on a water body and which may be considered as the front for setback requirements.

WATER METER. That device, with all appurtenances, which registers water flow to a customer.

WATER RETENTION AREA (WRA). A manmade or natural facility which collects and retains surface water and allows gradual ground infiltration.

WATER SERVICE CONNECTION. The point of connection to the public potable water system (metered or non-metered) where the Utility loses jurisdiction and sanitary control over the potable water delivered to that point. Included within this definition are connections for fire hydrants and other temporary or emergency water service. For metered connections, the point of connection is the downstream end of the water meter.

WATER SERVICE LATERAL. The pipe from the water main to the point of connection.

WATER SURFACE ELEVATION. The height, in relation to an accepted vertical datum, of floods of various magnitudes and frequencies in the flood plains of coastal or riverine areas.

WATER SYSTEM. A water supply distribution system consisting of all water mains, valves, service laterals, fire hydrants, meter boxes, etc. used to deliver water from the WTP to the consumer.

WATER TREATMENT PLANT (WTP). Includes all wells, pumps, tanks, valves, piping, treatment and disinfection facilities required to withdraw, treat, and disinfect water suitable for public consumption.

WETLANDS. Those land areas featuring unique environmental and/or hydrogeologic characteristics which qualifies as wetlands pursuant to § 373.019(25) FS and § 62-340.200 FACas determined and delineated by the appropriate jurisdictional agency

WETTEST SEASON. As defined in § 64E-6.002 FAC, that period of time each year in which the ground water table elevation can normally be expected to be at its highest elevation.

WILDLAND URBAN INTERFACE/INTERMIX ZONES: Locations which the Marion County Fire Rescue (MCFR) determines that topographical features, vegetation fuel types, local weather conditions, and prevailing winds may result in the potential for ignition of the structures from flames and firebrands of a wildland fire. A wildfire hazard severity analysis shall be provided for review and approval by MCFR.

Division 3 Acronyms.

AASHTO. American Association of State Highway and Transportation Officials
ACLF. Adult Congregate Living Facility
ADF. Average Daily Flow
ANSI. American National Standards Institute
API. American Petroleum Institute
ASME. American Society of Mechanical Engineers
ASTM. American Society for Testing Materials
AWWA. American Water Works Association
BMP. Best Management Practice(s)
C&D. Construction and Demolition
CCR. Covenants, Conditions, and Restrictions
CDD. Community Development District
CESQG Conditionally Exempt Small Quantity Generators
CFR. Code of Federal Regulations
CPAA. Comprehensive Plan Amendment Application
CWS. Community Water System
DADF. Designed Average Daily Flow, in gallons.
DBH. Diameter at Breast Height
DEM. Florida Division of Emergency Management or equivalent
DEO. Florida Department of Economic Opportunity
DIP. Ductile Iron Pipe
DIPRA. Ductile Iron Pipe Research Association
DOH. Florida Department of Health, local, regional or state, as applicable
EALS. Environmental Assessment for Listed Species

EALS-ER. Environmental Assessment for Listed Species Exemption Request
ECSD. Equine Commercial Support District
EPA. United States Environmental Protection Agency
ERC. Equivalent Residential Connection
FAA. Federal Aviation Administration
FAC. Florida Administrative Code
FAR. Floor Area Ratio
FBC. Florida Building Code
FCC. Federal Communications Commission
FDC. Fire Department Connection
FDEP. Florida Department of Environmental Protection
FDOF. Florida Division of Forestry
FDOT. Florida Department of Transportation
FEMA. Federal Emergency Management Agency
FFL. Florida Friendly Landscaping
FFPC. Florida Fire Prevention Code
FGCC. Federal Geodetic Control Committee
FHBM. Flood Hazard Base Map
FIRM. Flood Insurance Rate Map
FIS. Flood Insurance Study
FLUCCS. Land Use, Cover and Forms Classification System: A Technical Manual, State of Florida Department of Transportation
FNAI. Florida Natural Areas Inventory
FPS. Feet Per Second
FS. Florida Statute
FWC. Florida Fish and Wildlife Conservation Commission
GFA. Gross Floor Area
GLA. Gross Leasable Area
GPD. Gallons Per Day
GPM. Gallons Per Minute
GRPA. Groundwater Recharge Preservation Area
HOA. Home Owners Association
HUD. Housing and Urban Development
IES. Illuminating Engineering Society
IOS. Improved Open Space
ITE. Institute of Transportation Engineers
LBR. Limerock Bearing Ratio
LDC. Land Development Code
LDRC. Land Development Regulation Commission
LID. Low Impact Development
LOS. Level of Service
LOSS. Level of Service Standard
LPA. Local Planning Agency
LPDS. Low Pressure Dosing System
MCAVA. Marion County Aquifer Vulnerability Assessment
MCFR. Marion County Fire Rescue
MCHD. Marion County Health Department
MCOR. Marion County Official Records
MCUD. Marion County Utility Department
MFLA. Marion Friendly Landscaping Area

MGD. Million Gallons per Day
MTS. Minimum Technical Standards
MUTCD. Manual on Uniform Traffic Control Devices
NAVD. North American Vertical Datum
NEC. National Electric Code
NFPA. National Fire Protection Association
NGVD. National Geodetic Vertical Datum
NEMA. National Electrical Manufacturers Association
NPDES. National Pollutant Discharge Elimination System
NRCS. Natural Resources Conservation Service
NSF. National Sanitation Laboratory Foundation
OHWL. Ordinary High Water Line
OSHA. The Federal Occupational Safety and Health Administration
OSTDS. On-site Sewage Treatment and Disposal System
P&Z. Planning and Zoning Commission
PAR. Public Access Reuse
PBTS. Performance Based Treatment System
PSC. Florida Public Service Commission
PUD. Planned Unit Development
QNA. Qualified Natural Area
RIB. Rapid Infiltration Basin
RPZ. Reduced Pressure Zone
RRLA. Rapid Rate Land Application System
RV. Recreational Vehicle
RVD. Rural Village District
SFHA. Special Flood Hazard Area
SIC. Standard Industrial Classification
SJRWMD. St Johns River Water Management District
SPZ. Springs Protection Zone
SRLA. Slow Rate Land Application System
SUP. Special Use Permit
SWFWMD. Southwest Florida Water Management District
TDC. Transferrable Development Credit
TDCA. Transfer of Development Credits Application
TDR. Transferrable Development Rights
TN. Total Nitrogen
TPO. Transportation Planning Organization
TRP. Transfer of Rights Program
TVR. Transfer of Vested Rights
UF/IFAS. University of Florida, Institute of Food and Agriculture Science
UND. Urban Neighborhood District
USDA. United States Department of Agriculture
USDA-NRSC. United States Department of Agriculture-Natural Resources Conservation Service
USDOT. United Stated Department of Transportation
USFS. United States Forest Service
USFWS. United States Fish and Wildlife Service
UGB. Urban Growth Boundary
USGS. United States Geological Survey
V/C. Volume to Capacity Ratio
WBSL. Water Boundary Setback Line

WTP. Water Treatment Plant
WWTF. Wastewater Treatment Facility

Division 4 Planning and Zoning Commission (P&Z) and the Land Development Regulation Commission (LDRC)

Sec. 1.4.1 General Provisions. The following shall apply to the P&Z, SRAC, and LDRC. For the purposes of this division, the term "commission" shall respectively represent each commission generally or as specifically referenced.

A. Membership, appointment, removal, terms, officers, and vacancies.

(1) Each commission shall be composed of seven members to be appointed by the Board. Two alternate members may be appointed by the Board. All members shall be residents of Marion County. No member shall be an employee of the County. Employees of other governmental entities are eligible to be members provided they are not elected officials, in positions to establish policy for their employer, or department heads or higher.

(2) Ex-officio members shall be:

(a) Representative of the Marion County School Board,

(b) Representative of the US Military Operating Area,

(c) Department of Heath,

(d) Fire Rescue.

(3) Members may be compensated as determined by the Board.

(4) All members shall serve a term of four years, except that three members of each commission shall be appointed for an initial term of two years. No member shall serve more than three consecutive terms. Each member shall hold office until a successor is appointed.

(5) The members of each commission shall elect one of their members as chair and one as vice-chair. Each year thereafter, new elections shall be held. In the absence of the chair, the vice-chair shall act as chair and shall have all powers of the chair. No member shall serve as chair for more than two consecutive years.

(6) The presiding chair of any commission meeting may administer oaths, shall be in charge of all proceedings, and shall take such action as necessary to preserve order and the integrity of all proceedings.

B. Members may be removed by the Board, with or without cause, upon ten days written notice of intent to remove. Vacancies due to resignation, removal, or death shall be filled by Board appointment for the unexpired term.

C. Meetings and procedures.

(1) Meetings may be held to conduct workshops, regular business, or public hearings.

(2) All meetings shall be open to the public, and advertised consistent with Board or Florida Statutes requirements, as applicable.

(3) Regular meetings of the commission shall be held at least once per calendar year. All regular meetings shall be held after 5:00 p.m.

(4) Special meetings may be called by the Chair of the Board, a majority of the members of the Board, the Chair of the Commission, or a majority of the members of the commission. Special meetings may be held at any time.

(5) Quorum and necessary vote. No meeting of any commission shall be called to order, nor shall any business be transacted, without a quorum, except to reschedule a meeting. A quorum shall consist of four members and/or alternates. The chair shall be considered and counted as a member. Action shall be taken by a majority vote of those members present and constituting a

quorum.

D. General commission duties.

(1) To make its special knowledge and expertise available, upon reasonable written request and authorization of the Board, to any Official, Department, Board, Commission, or Agency of the County, State, or Federal Government.

(2) To adopt rules of procedure, consistent with law and this Code, for the administration and governance of its proceedings.

(3) To perform such other functions, duties and responsibilities as may be assigned to it by the Board or by general or special law.

E. Staff Support.

(1) The Growth Services Director or designee is hereby appointed as staff liaison to each commission.

(2) The Growth Services Director shall appoint a recording secretary to serve each commission. The secretary shall keep minutes of all proceedings, which minutes shall be a summary of all proceedings before the commission, attested to by the secretary, and which shall include the vote of each member upon every question. The secretary shall notify all members and interested parties of the meetings. The minutes shall be approved by a majority of the members of the commission.

Sec. 1.4.2 Planning and Zoning Commission (P&Z).

A. The P&Z is hereby established pursuant to Ch. 125 FS and §163.3161 FS, as amended, to act as an advisory commission to the Board regarding comprehensive planning and zoning matters as set forth in this Section.

B. Comprehensive Plan related duties.

(1) To serve as the Local Planning Agency (LPA) pursuant to §163.3161 FS, as amended.

(2) To review and consider the recommendations of the Growth Services staff on all elements of the Comprehensive Plan and any proposed amendments thereto, consistent with Articles 2 and 3.

(3) To hold duly noticed public hearings regarding amendments.

(4) To make recommendations to the Board regarding all elements of the Comprehensive Plan and any proposed amendments thereto, consistent with Articles 2 and 3.

(5) To monitor and oversee the effectiveness and status of the Comprehensive Plan and recommend to the Board such changes as may, from time to time, be required.

(6) To assist the Growth Services Department in preparing periodic reports required by §163.3191 FS to assess and evaluate the Comprehensive Plan, or any element or portion thereof, which shall contain appropriate statements (using words, maps, illustrations or other forms) related to:

(a) The major problems of development, physical deterioration, and the location of land uses and the social and economic effects of such uses in the area.

(b) The condition of each element in the Comprehensive Plan at the date of adoption and at the date of report.

(c) The Comprehensive Plan objectives as compared with actual results at the date of report.

(d) The extent to which unanticipated and unforeseen problems and opportunities occurred between the date of adoption and the date of report.

(e) Suggested changes needed to update the Comprehensive Plan, elements, or portions thereof, including reformulated objectives, policies, and standards.

C. Zoning related duties.

(1) To review and consider the recommendations of the Growth Services staff on Zoning Change and Special Use Permit Applications, consistent with Articles 2 and 4.

(2) To hold public hearings regarding Zoning Change and Special Use Permit applications as required by law and this Code.

(3) To make recommendations to the Board regarding Zoning Change and Special Use Permit applications, consistent with Articles 2 and 4.

Sec. 1.4.3 Land Development Regulation Commission (LDRC).

A. The Land Development Regulation Commission is established pursuant to Ch. 125 FS and § 163.3161 FS, as amended, to act as an advisory commission to the Board in regards to the following:

(1) The Marion County Land Development Code and its land development regulations as set forth in this Section;

(2) The Marion County's Scenic Roads Program as set forth in this Section and Section 5.6.

B. Land Development Code Duties.

(1) To review, revise, and consider the recommendations of the county staff with regard to proposed land development regulations and amendments thereto, consistent with Article 2.

(2) To hold duly noticed public hearings regarding land development regulations and amendments thereto, as required by law and this Code.

(3) To make recommendations to the Board regarding consistency of proposed land development regulations or amendments with the County's approved and adopted Comprehensive Plan.

(4) To make recommendations to the Board regarding proposed land development regulations or amendments thereto, consistent with Article 2.

C. Scenic Roads Duties

(1) To review and consider the recommendations of the Growth Services staff in regards to the Scenic Roads Master Plan (SRMP) and amendments thereto, and Scenic Road Amendment Applications (SRAAs), consistent with Articles 2 and 5.

(2) To hold duly noticed public hearings regarding the SRMP and amendments thereto, as required by law and this Code.

(3) To make recommendations to the Board regarding proposed SRMP amendments and SRAAs, consistent with Articles 2 and 5.

(4) To monitor and oversee the effectiveness and status of the SRMP and recommend to the Board such changes in the SRMP as may be required.

(5) To recommend and/or prepare nominations for Board consideration designating Scenic Routes for the State and Federal Scenic Byways Programs.

Division 5 Board of Adjustment

Sec. 1.5.1 A Board of Adjustment is established with the following powers and duties:

A. To authorize such variances from the terms of these regulations as will not be contrary to the public interest where, owing to special conditions, a literal enforcement of the provisions of these regulations would result in unnecessary and undue hardship. A variance from the terms of these regulations shall not be granted by the Board of Adjustment unless a written petition for a variance is submitted demonstrating that:

(1) Special conditions and circumstances exist which are peculiar to the land, structure or building involved and which are not applicable to other lands, structures or buildings with the same zoning classification and land use area.

(2) The special conditions and circumstances did not result from the actions of the applicant.

(3) Literal interpretation of the provisions of applicable regulations would deprive the applicant of rights commonly enjoyed by other properties with the same zoning classification and land use area under the terms of said regulations and would work unnecessary and undue hardship on the applicant.

(4) The variance, if granted, is the minimum variance that will allow the reasonable use of the land, building or structure.

(5) Granting the variance requested will not confer on the applicant any special privilege that is denied by these regulations to other lands, buildings or structures in the same zoning classification and land use area.

(6) The granting of the variance will not be injurious to the neighborhood or otherwise detrimental to the public welfare.

B. Notice of public hearing. Due public notice as defined in Section 2.2 shall be given prior to public hearings held by the Board of Adjustment. Said notices shall also inform the recipient that actions of the Board of Adjustment are final.

C. Public hearing. The public hearing shall be held by the Board of Adjustment and any party may appear in person, by authorized agent, or by an attorney.

D. Findings. The Board of Adjustment shall make findings that the requirements of this section have or have not been demonstrated by the applicant for a variance.

E. Conditions and safeguards. In granting any variance, the Board of Adjustment may prescribe appropriate conditions and safeguards in conformity with these regulations, including, but not limited to, reasonable time limits within which the action for said variance is required to begin or be completed, or both. Violation of such conditions and safeguards, when made a part of the terms under which the variance is granted, shall be deemed a violation of the Code.

F. The Board of Adjustment shall have the authority to revoke a variance previously granted upon the submission of facts supporting noncompliance with conditions and safeguards presented by the Board of Adjustment in granting the variance. The Growth Services Director or designee shall provide written notice by “registered” mail to the property owner at least 15 days prior to consideration of revocation by the Board of Adjustment, and such written notice shall specify the time, date and meeting place of the Board of Adjustment and the reasons supporting revocation. The Board of Adjustment shall conduct an informal hearing on such revocation and shall adopt findings of fact supporting such revocation. Appeals of revocation ordered by the Board of Adjustment shall be to the Circuit Court by Writ of Certiorari.

G. Limitation on power to grant variances. Under no circumstances shall the Board of Adjustment grant a variance to permit a use not permitted under the terms of these regulations in the zoning classification involved, or any use expressly or by implication prohibited by the terms of these regulations in the said zoning classification. No non-conforming use of neighboring lands, structures or buildings in the same zoning classification and no permitted use of lands, structures or buildings in any other classification shall be considered grounds for the granting of a variance. No Special Use Permits shall be granted by the Board of Adjustment.

H. Limitation of variances. When the Board of Adjustment has denied an application for a variance, no applicant shall submit an application for the same variance for a period of 12 months from the date of denial.

I. Request for continuance. At the request of an applicant and for good cause shown, the Board of Adjustment may continue the public hearing on an application for a variance. The applicant shall be required to pay an additional application fee to cover the cost of re-advertising and re-notifying the adjacent property owners. The Board of Adjustment shall not grant an applicant's request for continuance when the application is the result of a notice of code violation and the variance is

necessary to cure such violation. The applicant will not be required to pay an additional application fee if the continuance is granted by the Board of Adjustment on their own initiative.

J. Staff liaison. The Growth Services Director or designee is hereby appointed as staff liaison to the Board of Adjustment.

Sec. 1.5.2 Membership, appointment, removal, terms, officers, and vacancies.

A. The Board of Adjustment shall be composed of seven members to be appointed by the Board of County Commissioners, each for a term of three years, and two alternate members, designated as such, each for a term of three years. Such alternate members may act in the temporary absence or disability of any regular member or may act when a regular member is otherwise disqualified in a particular case that may be presented to the Board of Adjustment.

B. Qualifications. No member or alternate shall hold any other public position or office in any municipality or County government in Marion County. Members or alternates of the Board of Adjustment shall be residents of the County.

C. Removal. Members or alternates may be removed by the Board of County Commissioners with or without cause upon ten days written notice of intent to remove.

D. Vacancies. Vacancies due to resignation, removal or death shall be filled by Board of County Commissioners' appointment for the unexpired term.

E. Compensation. Members may be compensated as determined by the Board.

F. Procedures.

(1) The Board of Adjustment shall select a chair and vice-chair from among its members. All regular members of the Board of Adjustment and alternates sitting on the Board of Adjustment shall be entitled to vote on matters before the Board of Adjustment.

(2) The Board of Adjustment shall adopt rules for transaction of its business and shall keep a record of its resolutions, transactions, findings and determinations which record shall be a public record.

(3) Meetings shall be held at least once every quarter and at such other times as the Board of Adjustment may determine.

(4) The Board of Adjustment shall keep minutes of its proceedings showing the vote of each member or alternate (including the chair and vice-chair) or if absent or failing to vote, indicating such fact. A quorum for the transaction of business shall consist of four members or alternates.

(5) If any member or alternate of the Board of Adjustment has a voting conflict as defined by §112.3143 FS, he shall disqualify himself from all participation in that case.

(6) The Board of County Commissioners may appropriate funds for expenses necessary in the conduct of the work of the Board of Adjustment. The Board of Adjustment may expend all sums so appropriated for the purposes and activities authorized by this Code.

Sec. 1.5.3 Appeals.

A. Appeals to the Board of Adjustment concerning interpretation of the zoning requirements of this Code by the Planning/Zoning Manager may be taken by any aggrieved party or by any officer, agency or department of Marion County affected by such decision, determination or requirement. Such appeals shall be taken within 30 days from the date of the written determination by filing with the Growth Services Department a Notice of Appeal, specifying the ground therefore. The Growth Services Director or designee shall forthwith transmit to the Board of Adjustment all papers constituting the record upon which the action appealed from was taken. The Board of Adjustment shall fix a reasonable time for the hearing on the appeal and shall give notice to all parties of the date, time and place of said appeal hearing. At the hearing, any party may appear in person, by

authorized agent, or by an attorney.

B. All appeals shall be approved or denied by a majority vote of the Board of Adjustment members present and voting at the meeting where the appeal is heard. If the vote of the Board of Adjustment results in a tie vote, the tie vote shall operate as a deferral of the appeal to the next meeting of the Board of Adjustment. Appeal of a Board of Adjustment's final written order on an appeal shall conform to Section 4.11.

C. Decision on appeal. The Board of Adjustment may reverse or affirm, wholly or partly, or may modify the order, requirement, decision or determination appealed from and may make such order, requirement, decision or determination as it deems just and proper.

Division 6 Development Review Committee

Sec. 1.6.1 A Development Review Committee is hereby established pursuant to Ch. 163 FS and amendments thereto.

Sec. 1.6.2 Membership. The Development Review Committee is hereby established and shall consist of five voting members. The following County employees shall constitute the committee: Growth Services Director, County Engineer, Utilities Director, Fire Marshal, and Planning/Zoning Manager. Any committee member's alternate shall be approved by the chair of the DRC.

Sec. 1.6.3 Purpose. The purpose of the Development Review Committee is to review, comment, make recommendations and/or approve development applications and plans. This committee will perform other duties conferred on it by the Board.

Sec. 1.6.4 Rules of Procedures.

A. Rules. The Development Review Committee shall adopt rules for transaction of its business.

B. Records and minutes. The committee shall keep minutes of its transactions, findings and determinations.

C. Meetings. Meetings shall be held at least every other week and at such other times as the committee may determine necessary. Variations in the meeting schedule are permissible to accommodate holidays and other circumstances.

D. Quorum. A quorum for the transaction of business shall consist of three members.

E. Chairmanship structure. A chair and vice chair shall be appointed by the County Administrator.

Sec. 1.6.5 Appeal. In case of disagreement between the applicant and the Development Review Committee, the decision of the Development Review Committee may be appealed to the Board of County Commissioners or other authority as established by this Code.

Division 7 Vested Rights.

Sec. 1.7.1 Intent and purpose. This division establishes the administrative procedures and standards by which a property owner may demonstrate that private property rights have been vested from the provisions of the adopted Comprehensive Plan. Said administrative procedures shall provide determinations if a development is vested from the requirements of the adopted Comprehensive Plan and to what extent. The Marion County Comprehensive Plan provides objectives and policies relating to vesting and exceptions from density requirement for the unincorporated area of Marion County.

Sec. 1.7.2 Vested development rights.

A. A property owner shall have vested rights to complete any development where:

(1) the development has been authorized as a Development of Regional Impact pursuant to Ch. 380

FS; or

(2) the development has been authorized as a Florida Quality Development pursuant to Ch. 380 FS, or

(3) the development has been issued a final local development order by Marion County and development has commenced and is continuing in good faith; or

(4) the property owner or developer has requested and secured a vested rights determination consistent with the provisions of this Division.

B. The property owner may qualify for an exception to the densities required in the Comprehensive Plan for construction of one residential unit.

Sec. 1.7.3 Presumptive, statutory, and common law vesting.

A. Presumptive Vesting. The following categories shall be presumptively vested for the purposes of consistency with the Comprehensive Plan as specified in the Comprehensive Plan and shall not be required to file an application to preserve their vested rights status:

(1) All active and valid building permits issued prior to June 11, 1992 where development has commenced and is continuing in good faith before expiration of such permits.

(2) Any structure on which construction has been completed and a certificate of occupancy issued if a certificate of occupancy was required at time of permitting.

B. Presumptive Exceptions to Densities. Recorded and unrecorded subdivisions that may be allowed density exceptions or that may be required to aggregate contiguous lots are as follows:

Parcels within a phase of a recorded or unrecorded subdivision which have met the applicable conditions set forth below prior to January 1, 1992 shall be permitted to develop at the density established for that subdivision, provided that all § 10D-6 FAC requirements and all other requirements of the Comprehensive Plan are met. Those recorded or unrecorded subdivisions not meeting the requirements listed below will be required to aggregate parcels to meet the density requirements of this Comprehensive Plan as provided herein.

(1) Subdivisions that have direct access to a County paved road and in which all parcels front on a continually maintained, paved, or stabilized road that meets the standards established by Marion County; and

(2) Parcels within subdivisions in which all parcels are served by a stormwater management system that functions at the standards established by Marion County; and

(3) Parcels within subdivisions in which the sale of individual lots to persons by the original subdivider has occurred at the following rates prior to August 11, 1993:

(a) At least 85 percent of the total number of lots are sold if the subdivision was created in 1982 or before; or

(b) At least 60 percent of the total number of lots are sold if the subdivision was created from 1983 to 1987 inclusive; or

(c) For subdivisions created after 1987 the following conditions apply in order for no aggregation requirements to be placed upon contiguous lots within the subdivision:

1. At least 50 percent of the total number of lots are sold by 1993 if the subdivision was created in 1988; or

2. At least 50 percent of the total number of lots are sold by 1994 if the subdivision was created in 1989; or

3. At least 50 percent of the total number of lots are sold by 1995 if the subdivision was created in 1990; or

4. At least 50 percent of the total number of lots are sold by 1996 if the subdivision was

created in 1991; or

5. At least 50 percent of the total number of lots are sold by 1997 if the subdivision was created in 1992.

The percentage of lots sold is meant to reflect the sale of individual lots to many individuals and not the transfer of large number of contiguous lots to investors. The County shall deny this exception if the sale of lots as indicated above does not reflect this intent.

C. The Growth Services Director or designee shall notify developers or owners, upon their request, of recorded and unrecorded subdivisions, in writing, of parcels in the subdivision subject to aggregation under this section. A developer or owner may appeal the determination of the Growth Services Director to the Development Review Committee provided such an appeal is filed within 90 days of the issuance of the determination. Failure of the developer or owner to submit an appeal within the 90 day period shall constitute a waiver of any right to appeal. The written determination of the Growth Services Director or designee that contiguous lots are subject to aggregation shall control the issuance of building permits on such lots. A decision on appeal may be appealed to a Hearing Officer in accordance with this division.

D. Statutory Vesting. The following categories will be statutorily vested for the purposes of consistency with the Comprehensive Plan and shall not be required to file an application to preserve their vested rights status. The Growth Services Department shall maintain a listing of such developments.

(1) Development Orders issued prior to the effective date of this Division authorizing a Development of Regional Impact (DRI) or a Florida Quality Development (FQD) pursuant to Ch. 380 FS or any successor statute to said Chapter to the extent such development order specifically addresses vested rights to complete such development.

(a) Developments shall be vested to the extent that vested development rights are set forth in a valid, unexpired binding letter and any subsequent binding letter of modification pursuant to §§ 380.06(4) and 380.06(20) FS or any successor statute to said Sections.

(2) Developments failing to comply with this Division shall be required to apply for a determination of vested development rights and possible requirements for consistency with the adopted Comprehensive Plan prior to commencement or continuation of development. The right to develop or to continue the development of the property shall be found to exist if a valid and unexpired final local development order was issued by the County prior to the effective date of this Division and development has commenced and is continuing in good faith.

E. Common Law Vesting.

(1) An application for a vested rights determination shall be approved if the applicant has demonstrated all of the following or otherwise been accorded vested rights status by a court of competent jurisdiction after the applicant has complied with the administrative appeal rights set forth in this Division.

(a) There was a valid, unexpired act of an agency or authority of Marion County which the applicant reasonably relied upon in good faith; and

(b) The applicant, in reliance upon the valid, unexpired act of Marion County, has made a substantial change in position or has incurred extensive obligations or expenses; and

(c) It would be inequitable, unjust or fundamentally unfair to deny the development rights acquired by the applicant. In making this determination, Marion County shall consider a number of factors including but not limited to:

1. Whether construction or other development activity has commenced and is continuing in good faith.

2. Whether the expenses or obligations incurred have been substantially utilized for a development permitted by the Marion County Comprehensive Plan and Land

Development Regulations in effect at the time of the expenditure.

(2) The following are not considered development expenditures or obligations in and of themselves:

(a) Expenditures for legal and other professional services that are not related to the design or construction of improvements;

(b) Taxes paid;

(c) Expenditure for acquisition or the financing costs of the land.

(3) The mere existence of zoning, standing alone, which may be contrary to the Future Land Use Element, or any other element of the Comprehensive Plan shall not be determinative of vested rights.

F. Time Limitations.

(1) The owner shall request a determination of vested rights pursuant to this Division by filing a technically complete, sworn application and the application fee with the Growth Services Department, on or before the dates set forth below.

(a) Application for Vested Right Determination from the Policies of the Comprehensive Plan adopted January 29, 1992 shall be filed on or before December 31, 1992.

(b) Application for Vested Right Determination from the Remedial Amendments to the Comprehensive Plan adopted August 11, 1993 shall be filed on or before June 10, 1994.

(c) Application for Vested Right Determination from future amendments to the Comprehensive Plan shall be filed within 180 days of the adoption date of such future amendments to the Comprehensive Plan.

Sec. 1.7.4 Application procedures.

A. Application for vested rights determination pursuant to this Division shall be submitted to the Marion County Growth Services Department and shall include the following information:

(1) The name and address of the applicant, who is the owner(s) or a person authorized in writing to apply on behalf of the owner(s). If the property is owned by more than one person, any owner or an authorized agent of the owner(s) may apply;

(2) A legal description and survey of the property which is the subject of the application;

(3) The name and address of each owner of the property;

(4) A site or development plan or plat for the property;

(5) Identification by specific reference to any ordinance, resolution, or other action of the County, or failure to act by the County upon which the applicant relied and which the applicant believes supports the owner's vested rights claim notwithstanding an apparent conflict with the adopted Comprehensive Plan;

(6) Such other relevant information that staff may request.

B. Failure to timely file an application requesting a determination within the prescribed time limits shall constitute a waiver of any vested rights claim by the owner of the property.

C. The Board shall establish an application fee by resolution and said application fee shall be included with the application for a determination of vested rights.

D. At any time during or after the application period, the Board may waive the maximum response time set forth in this Division to a date certain. Said waiver may be applicable to any step in the vested rights determination procedure upon the determination by the Board that the volume of applications received exceeds the capacity of the staff to process those applications within the stated time limits or upon the applicant's reasonable request.

E. Review for completeness. The Growth Services Director or designee shall review the submitted application within ten working days after receipt to determine if the request is technically complete.

If not technically complete, it will be returned to the applicant immediately with written notification of deficient items as required by this Division. Within 20 additional working days from the date the application was returned to the applicant, the applicant shall correct the deficient items and resubmit the application. If the applicant does not resubmit in this time period, the application will become void unless granted an extension by the Development Review Committee (DRC) based on applicant's request. Extension shall be for one time only and shall not exceed 45 calendar days.

F. Vesting determination. After an application is determined technically complete by the Growth Services Director, it shall be reviewed by staff for recommendations and scheduled for DRC's consideration. Final status determination shall be provided within 40 working days. The staff recommendation report and the application shall be presented as part of the DRC agenda. The applicant shall be notified in writing of the date and time of the DRC meeting a minimum of five working days prior to the meeting date.

G. DRC shall provide the applicant with written notification of the determination of vested status including findings of fact supporting such determination, within ten working days after making said determination.

H. Upon receipt of the written notification, an applicant may appeal DRC's determination to a Hearing Officer. A request to appeal shall be submitted in writing to the Growth Services Director with the appropriate fees. Once the request to appeal is received and determined valid, the Growth Services Director shall notify the Hearing Officer who will set a date, time, and place for the hearing. A report based on the information considered and discussed by DRC will be prepared by staff and presented to the Hearing Officer. A copy of this report will be made available to the applicant prior to the hearing.

Sec. 1.7.5 Appeals to the Hearing Officer.

A. Purpose. It is the purpose of this section to provide an administrative process for appealing decisions rendered by DRC prior to any available recourse in a court of law. In particular, it is intended that such administrative relief be provided in the most professional, objective, and equitable manner possible through the appointment of a Hearing Officer to adjudicate matters as provided herein. No party shall be deemed to have exhausted his or her administrative remedies for the purpose of seeking judicial review unless the party first obtains review of DRC's decision by the Hearing Officer as provided herein.

B. Hearing. The Hearing Officer shall conduct a de novo administrative hearing in order to render a vested rights determination consistent with the provisions of this chapter.

C. Appeal. After a DRC vesting determination, the Hearing Officer "appeal" process provided in this section is designed to allow for an appeal of DRC action after a full and complete hearing. This "appeal" is not intended to mean an appeal in the traditional sense, that is, only a review of the DRC record of their determination. The Hearing Officer "appeal" shall be construed in its broadest, nontechnical sense, which is merely an application to a higher authority for a review of the DRC action taken.

D. Record on Appeal. If the DRC record of their determination is full and complete, the Hearing Officer may determine that the record is the only evidence that is necessary. However, the Hearing Officer may determine that additional evidence and oral or written testimony, including cross-examination, is necessary to properly evaluate DRC's action. The Hearing Officer shall have the authority to determine the need for additional evidence and/or testimony.

E. Applicability. The property owner may appeal to the Hearing Officer a decision rendered by DRC on an application for a vesting determination.

F. Filing for appeal. The procedure for filing an appeal shall be as follows:

(1) Appeals shall be commenced by filing a notice of appeal with the Growth Services Department

within 30 calendar days of the date the decision of DRC is rendered.

(2) The notice of appeal shall set forth in detail the basis of the appeal.

(3) The County shall accurately and completely preserve all testimony in the proceeding and, on the request of any party, it shall make a full or partial transcript or existing hearing record available at no more than actual cost.

(4) In any case where a notice of appeal has been filed, the decision of DRC shall be stayed pending the final decision of the Hearing Officer.

(5) Following the hearing, the Hearing Officer shall prepare the written findings and decision. Copies of the findings and decision shall be mailed by the Hearing Officer to each party to the appeal and to the Growth Services Department, with a copy provided to DRC.

G. Conduct of the hearing. Conduct of the hearing before the Hearing Officer shall be as follows:

(1) The Hearing Officer shall set forth at the outset of the hearing the order of the proceedings and the rules under which the hearing will be conducted.

(2) The order of presumption at the hearing shall be as follows:

(a) Receipt of the transcript, minutes and exhibits from DRC, if any.

(b) Opening statements by the parties.

(c) Appellant’s case.

(d) Respondent’s case.

(e) Rebuttal by appellant.

(f) Summation by respondent.

(g) Summation by appellant.

(h) Conclusion of the hearing by the Hearing Officer.

(3) The record of DRC's hearing and decision, including all exhibits, shall be received and constitute a part of the record.

(4) The Hearing Officer shall have the authority to determine the applicability and relevance of all materials, exhibits, and testimony and to exclude irrelevant, immaterial, or repetitious matter.

(5) The Hearing Officer is authorized to administer oaths to witnesses.

(6) A reasonable amount of cross-examination of witnesses shall be permitted at the discretion of the Hearing Officer.

(7) The time for presentation of a case shall be determined by the Hearing Officer.

(8) The Hearing Officer may allow the parties to submit proposed written findings of fact and conclusions of law following the hearing, and shall advise the parties of the timetable for so doing if allowed.

H. Decision. The decision of the Hearing Officer shall be based upon the following criteria and rendered as follows:

(1) The Hearing Officer shall review the record and testimony presented at the hearing before DRC. Although additional evidence may be brought before the Hearing Officer, the record before DRC shall be incorporated into the record before the Hearing Officer, supplemented by such additional evidence as may be brought before the Hearing Officer.

(2) The Hearing Officer shall be guided by the previously adopted Comprehensive Plan, the currently adopted Comprehensive Plan, the Land Development Regulations, this Division, and established case law.

(3) The burden shall be upon the property owner to show that the decision of DRC is not supported by a preponderance of the evidence or the DRC decision departs from the essential

requirements of law.

(4) The Hearing Officer's determination shall include appropriate findings of fact, conclusions of law, and decision in the matter of the appeal. The Hearing Officer may affirm, affirm with conditions, or reverse the decision of DRC.

(5) The Hearing Officer shall file his written determination on each appeal with the Growth Services Director within 30 calendar days of the date of the appeal hearing and a copy shall be provided to DRC and the applicant.

(6) The decision of the Hearing Officer shall be final, subject to judicial review.

I. Judicial Review. Judicial review of the Hearing Officer's decision is available to the property owner and the County and shall be by common-law certiorari to the Circuit Court subject to the Florida Rules of Appellate Procedure. A notice of appeal must be filed within 30 days of rendition of the Hearing Officer's decision. In any case where judicial review is sought, the decision of the Hearing Officer shall be stayed pending the final determination by the Circuit Court.

Sec. 1.7.6 Appointment and qualifications of Hearing Officer.

A. The Board shall provide a Hearing Officer to conduct hearings and shall pay all costs of the Hearing Officer.

B. A person appointed as Hearing Officer shall possess the requisite knowledge of Florida land use practices and relevant land use, vesting, statutory and case law.

C. No Hearing Officer shall act as agent or attorney or be otherwise involved with any associated land development matter which may come before the Hearing Officer on appeal. The Hearing Officer shall refuse to handle or shall excuse himself from all appeals which involve a conflict of interest. Further, no Hearing Officer shall initiate or consider ex parte or other communication with any party of interest to the hearing concerning the substance of any proceeding to be heard by the Hearing Officer except such expert advice as the Hearing Officer may determine appropriate and solicit.

Sec. 1.7.7 Limitations on determinations of vested rights.

A. Presumptive vested rights determinations do not have an expiration date unless specified in other ordinances, building permits, statutory limitations and limitations contained within approved development orders.

B. Common law vested rights determinations shall remain valid for a period up to five years from the date the determination was made unless otherwise specified by the vesting authority. An extension may be requested and granted by the Board. The request for an extension must be made no less than 90 days prior to the expiration of the determination.

C. All development subject to a vested rights determination must be consistent with the terms of the development approval upon which the determination was based. Any substantial deviation from a prior approval, except as required by governmental action, shall cause the development involved to be subject to the policies, regulations and implementing decisions set forth in the Comprehensive Plan for such deviation only. Vested projects wishing to amend or change their Master Development Plans and schedules shall request consideration by DRC which shall make a recommendation to the Board if the proposed amendment or change constitutes a substantial deviation from the vested project. DRC shall make recommendations to the Board concerning requirements necessary to mitigate the deviation.

Changes in a vested development that do not create additional impact by the development will not be considered a substantial deviation from the vesting order.

D. A vested rights determination shall apply to the land and is therefore transferable from owner to owner.

E. If the development order expires prior to development and extensions permitted in this Code are

not pursued, the vesting status of the property will become null and void.

F. Development orders issued after May 1, 1992, will be required to be in full compliance with the Comprehensive Plan and the Land Development Code.

G. Persons or entities granted a county development order vested under the provisions of this Code shall be vested to complete their development in accordance with the terms of their development order as approved in writing or shown on accompanying plans.

Sec. 1.7.8 Nothing in this division or in any final vested rights determination made pursuant to this division shall impair the authority of the County to defer exercise of development rights in circumstances where such deferral is necessary to the public health, safety and welfare and is otherwise authorized by law.

Division 8 Concurrency Management

Sec. 1.8.1 Purpose and contents.

A. This division establishes the County's "Concurrency Management System" to evaluate level of service impacts to ensure public facilities will not be degraded below their respective level of service standard as adopted in the Marion County Comprehensive Plan and/or the Inter-Local Agreement between the Board and the Marion County School Board, consistent with the provisions of § 163.3180 FS.

B. No final development order shall be approved, except for development identified as exempt or vested by this division, unless it is determined that the necessary public facilities will be available concurrent with the impacts of the proposed development consistent with the provisions of this division, the Marion County Comprehensive Plan, and § 163.3180 FS. The burden of meeting concurrency requirements is on the applicant requesting a final development order, consistent with the provisions of this division.

Sec. 1.8.2 Applicability.

A. The following facilities are subject to concurrency review and approval, consistent with § 163.3180 FS:

(1) Potable water,

(2) Sanitary Sewer,

(3) Solid Waste,

(4) Stormwater,

(5) Schools, and

(6) Roadway transportation facilities.

B. The following facilities are not subject to concurrency review and approval:

(1) Parks and recreation, and

(2) Mass transit.

C. The following development applications shall be classified as a final development order subject to facility concurrency review and approval consistent with the provisions of this division and Article 2; however items (2) through (8) shall be eligible to elect concurrency deferral as provided in Section 1.8.2.D:

(1) Development of Regional Impact/Florida Quality Development,

(2) Rezoning,

(3) Master Plan,

(4) Preliminary Plat,

(5) Improvement Plan,

(6) Final Plat,

(7) Major Site Plan,

(8) Minor Site Plan, and

(9) Building Permit which will result in enabling or conducting a use which is new and/or an increase in intensity of a previously existing/operating use.

D. The following development applications shall be classified as a preliminary development order subject only to facility concurrency review. However, concurrency approval is not required as a part or function of the development application's review consistent with Article 2:

(1) Comprehensive Plan Amendment,

(2) Land Development Code Amendment,

(3) Special Use Permit, and

(4) Conceptual Plan.

E. Applications for development orders or permits meeting the following shall be exempt from this Division:

(1) Vested development.

(a) The following vested development types, except as noted or consistent with Item (b):

1. Vested rights. A project granted vested status and issued a Vesting Order consistent with the provisions of Division 1.7 unless a reference(s) to meeting concurrency is specified in the vested project's vesting determination.

2. Vested development order. A DRI or FQD subject to a Development Order issued prior to June 18, 1992, unless a reference(s) to meeting concurrency is specified in the DRI or FQD's Development Order.

3. Vested building permits. Building permits issued prior to June 18, 1992.

(b) Vested development proposed to be modified shall be subject to concurrency review if the modification creates additional development units, density, and/or intensity. However, only the net increase or expansion shall be subject to concurrency review and approval.

(2) The following development types and related development orders or permits which are not creating or increasing density or intensity of use are exempt from this Section:

(a) Existing buildings to be modified, altered, repaired or replaced unless the modification will increase the number of units in a residential building or increase and/or change the square footage and/or intensity of the use for a non-residential building. Where such modifications will increase the number of dwelling units or increase and/or change square footage and/or intensity of the use for non-residential projects, only the net increase or expansion shall be subject to concurrency review and approval.

(b) Accessory buildings and structures for residential uses which do not include any living units or allow for new and/or additional non-residential site uses, such as barns, sheds, garages, towers, storage tanks, and swimming pools.

(c) Development applications in Article 2 that do not authorize increases in density or intensity.

(d) Fire stations, utility plants (potable water, sanitary sewer) not including office space.

(e) A building permit for one individual single family residence shall be exempt from concurrency review and approval, subject to compliance with this Code.

F. Concurrency Deferral

An owner may elect to defer required concurrency review and approval for a development application identified in Section 1.8.2.A to a subsequent development application review stage

by executing the following "Concurrency Deferral Statement" on the development application plan, or in a separate sworn and notarized affidavit, a copy of which shall be provided to Growth Services and the original shall be recorded in Marion County's Public Records, as applicable:

"This project has not been granted concurrency approval and/or granted and/or reserved any public facility capacities. Future rights to develop the resulting property(ies) are subject to a deferred concurrency determination, and final approval to develop the property has not been obtained. The completion of concurrency review and/or approval has been deferred to later development review stages, such as, but not limited to, [list subsequent applications expected pursuant to Section 1.8.2.C as applicable]."

Sec. 1.8.3 Level of Service Standards (LOSS).

The level of service standards herein shall be used to evaluate development demand for concurrency review, evaluation, and/or approval, consistent with the Comprehensive Plan, Ch. 163 FS, and the following provisions:

A. Potable water.

(1) Residential land uses - 150 gallons per person per day.

(2) Non-residential land uses – 2,750 gallons per acre.

B. Sanitary sewer.

(1) Residential land uses - 110 gallons per person per day.

(2) Non-residential land uses - 2,000 gallons per acre per day.

C. Solid waste.

(1) Residential land uses - 6.2 pounds of solid waste generation per person per day.

(2) Non-residential land uses - non-residential uses are exempt from solid waste concurrency review and approval, subject to compliance with applicable local, regional, state, and federal hazardous waste management and other applicable solid waste removal requirements and regulations.

D. Stormwater.

(1) Closed basin stormwater systems shall be designed for a minimum 100-year frequency, 24-hour duration design storm.

(2) Open basin stormwater systems shall be designed for a minimum 25-year frequency, 24-hour duration design storm.

(3) Other best available data may be presented for review and approval consideration subject to approval by the County Engineer, or designee.

E. Schools.

(1) LOSS shall be based on school type and its respective design capacity as follows:

(a) Elementary – 105 percent of the school's design capacity.

(b) Middle – 105 percent of the school's design capacity.

(c) High – 100 percent of the school's design capacity.

(2) The final demand and capacity determination shall be made by the Growth Services Director in consultation with the Marion County School Board. The appeal of any such determination shall be made to DRC which may consider input provided by the Marion County School Board.

F. Traffic/roads LOSS shall comply with the following:

(1) State Roadways Not Exceeding Capacity: LOSS shall comply with FDOT Procedure No. 525-000-006, Level of Service Standards and Highway Capacity Analysis for the State Highway System, as amended,

(2) State Roadways Exceeding Capacity: LOSS shall comply with FDOT Procedure No. 525-000-006 and the LOSS provided in Table 1.8.3-1: State Roads Exceeding Capacity, until such time FDOT and/or Marion County can secure committed funding for the creation of additional roadway capacity.

(3) Marion County Specific Roadways: LOSS shall comply with Table 1.8.3-2: Minimum Peak Hour LOSS for Specific Functionally Classified County Roads.

(4) Marion County Non-specified Roadways: LOSS shall comply with Table 1.8.3-3: Minimum Peak Hour LOSS for Non-Specified Functionally Classified County Roads NOT specified in Table 1.8.3-2.

Table 1.8.3-1 State Roads Exceeding Capacity

Road	From	To	Roadway Class	LOSS
SR 40	NE 64th Avenue	SR 326	Rural Principal Arterial	D
SR 40	SR 326	CR 314	Rural Principal Arterial	D

Table 1.8.3-2 Minimum Peak Hour LOSS for Specific Functionally Classified County Roads

Road Segment	From	To	LOSS
CR 320	Levy C.L.	I-75	B
CR 320	I-75	US 441	B
CR 318	Levy C.L.	CR 225	B
CR 318	CR 225	US 441	D
CR 318	US 441	US 301	C
CR 316	Levy C.L.	I-75	B
CR 316	I-75	CR 200 A	C
CR 326	Levy C.L.	CR 225 A	C
CR 326	CR 225 A	NW 44th AVE	D
CR 464 B	Levy C.L.	US 27	C
CR 329	Alachua C.L.	CR 320	B
CR 329	CR 320	CR 316	B
CR 329	CR 316	I-75	C
CR 329	I-75	US 441	C
CR 329	US 441	CR 200 A	C
NW 110th Ave	US 27	SR 40	C
CR 225 A	CR 329	CR 326	C
CR 225 A	CR 326	US 27	D
CR 225	CR 318	CR 326	B
CR 225	CR 326	US 27	B
CR 25 A	US 441	CR 329	D
CR 25 A	CR 329	CR 326	D
CR 328	US 41	SR 40	D
SW 66th St	CR 475 A	CR 475	C
SE 80th St	CR 475 A	US 441	C
SE 80th St	US 441	SE 41st Ct	C
CR 475 A	CR 475 B	CR 484	C
CR 475 A	CR 484	CR 475	C
CR 475 A	CR 475	US 301	C
CR 475	SE 52nd St	SE 80th St	C
CR 475	SE 80th St	CR 484	C
W Anthony Rd	SR 326	North Terminus	C
NE 58th Ave	SR 326	NE 97th St Rd	C
NE 97th St Rd	NE 36th Ave	NE 90th St Rd	C
NE 90th St Rd	NE 97th St Rd	CR 315	C

Table 1.8.3-3. Minimum Peak Hour LOSS for all Non-specific Functionally Classified County Roads NOT specified in Table 1.8.4-2

Roadway Type	Urban	Rural
Freeways	D	C
Principle Arterial	D	C
Minor Arterial	E	D
Major Collector	E	D
Minor Collector	E	D

(5) Measures such as access control, intersection improvements, improvements to alternative routes, and other transportation system management and transportation demand management strategies shall be implemented as a part of the strategy to "maintain and improve" the existing operating level of service.

G. Parks and recreation.

(1) Residential land uses – Two acres land per 1,000 population. For use in development review, 0.002 acres per person shall be used.

(2) Non-residential – non-residential uses are exempt.

Sec. 1.8.4 Concurrency applications and requirements.

A. Applications types:

(1) The submission of a development application, as provided in Section 1.8.2(c) and Article 2, shall be deemed an application for concurrency review and approval.

(2) No application for concurrency review and approval, as a request to reserve public facility capacity, may be submitted.

B. Application requirements.

(1) The development application serving as the concurrency application shall comply with the submission requirements of that application type and include a complete listing of all public facility improvements, both on-site and off-site, to be provided by the applicant.

(2) Utility Certification - If potable water or sanitary sewer is to be provided by an entity other than Marion County Utilities, the development application serving as the concurrency application shall be accompanied by a certificate from that entity that adequate capacity is available and reserved to satisfy the LOS Standard for water and/or sanitary sewer, consistent with the provisions of Section 1.8.3, as applicable.

C. All applications shall be reviewed for completeness. If adequate information to evaluate the application is not included, the applicant will be notified of the details of the incompleteness within the same time frame as specified by the corresponding development application.

D. Concurrency review shall follow the same development review process and time frames as the corresponding development application, based on the date the application was deemed complete.

E. All concurrency applications will be evaluated in the order in which they are deemed complete.

Sec. 1.8.5 Concurrency Evaluation.

A. Concurrency evaluation determines if there is adequate available capacity of each public facility types in Section 1.8.3.A through F to serve a proposed development project.

B. The demand for facility impacts shall be calculated as follows:

(1) For residential land uses, demand shall be based on the number of persons per dwelling unit type based on the most recent United States Decennial Census data as published by the United States Commerce Department, Bureau of the Census. A development application may recommend alternative person per unit densities based on actual conditions of specific area supported by data and analysis, subject to approval by the Growth Services Director in consultation with the Director for the related public facility; appeal of such a determination shall be made to DRC.

(2) For non-residential land uses, demand shall be based on acreage or other capacity standards where/when they are identified for specific land-uses in this Code (e.g., equivalent residential unit conversions, etc.). A development application may recommend alternative capacity standards for use, subject to approval by the Growth Services Director in consultation with the Director for the related public facility; appeal of such a determination shall be made to DRC.

C. The concurrency requirements for each of the facility types in Section 1.8.3.A through F. shall be considered to be met if one of the following is satisfied for that facility type:

(1) The necessary facility is in place at the time a final development order is issued; or,

(2) The necessary facility is under construction at the time a final development order is issued and will be in place at the time the impacts of the development occur; or

(3) A final development order is issued subject to a development order condition that the necessary facility will be in place at the time the impacts of the development occur;

(4) The necessary facility is fully funded in the County's Five Year Capital Improvements Plan as approved by the Board consistent Ch. 163 FS, or,

(5) Provision of the necessary facility is guaranteed in an enforceable development agreement. An enforceable development agreement may include, but is not limited to, development agreements pursuant to § 163.3220 FS, or an agreement or development order issued pursuant to Ch. 380 FS. The agreement must guarantee that the necessary facility will be in place at the time impacts of the development occur.

D. The concurrency requirements for transportation shall be considered to be met if one of the provisions in C(1) through (3) above is applicable. Also, the concurrency requirement for transportation may be satisfied by assuring that one of the following provisions is met:

(1) The construction of necessary road improvements to provide the capacity necessary to maintain the adopted level of service standard have been included in the first three years of the applicable Florida Department of Transportation Five Year Work Program for State roads; or

(2) The construction of necessary road improvements to provide the capacity necessary to maintain the adopted level of service standard have been included in the first three years of the County's Five Year Capital Improvements Program.

E. In determining the availability of services or facilities, a developer may propose and the County may approve developments in stages or phases so that the facilities and services needed for each phase will be available in accordance with the standards required by Sections 1.8.5.A and B above.

F. Intergovernmental coordination. The concurrency evaluation and minimum requirements shall only apply to those facilities within the unincorporated area of or under the jurisdiction of Marion County. If part of the applicable service area or Traffic Impact Area lies within an adjacent County or a local government within Marion County, the adopted level of service standard for those facilities lying within the adjacent County or local government shall be those adopted by such County or local government. A certification from the adjacent County or local government that the issuance of the final development order will not cause a reduction in the level of service standards for those facilities lying within the adjacent County or local government shall be required prior to granting a final development order approval and/or affirmative concurrency approval.

Sec. 1.8.6 Concurrency determination.

A. The concurrency determination cumulatively applies changes in demand (development) and supply (facility improvement) to the current available capacity of public facility, consistent with § 163.3180 FS,as follows:

(1) Identify and determine each applicable facility and its available facility capacity;

(2) Determine development units (e.g., residential dwelling units, non-residential use square feet/acreage) by land use type from the development application;

(3) Apply/multiply development units by the demand multiplier provided in Item (B) below to determine the development application demand; and

(4) Subtract application demand from available facility capacity to determine if adequate facility capacity exists for proposed development.

(5) Result of the procedure is as follows:

Capacity - Demand = Surplus = Adequate Capacity Determination (Approval)

or

Capacity - Demand = Deficit = Inadequate Capacity Determination (Denial)

B. Demand multiplier for each public facility for evaluation of impacts:

(1) Potable water. The multiplier shall be the applicable LOSS standard provided in Section 1.8.3.A. If a non-Marion County potable water system will be serving a proposed development, the applicant shall submit a certification from that entity that adequate capacity is available and reserved to satisfy the level of service standard for potable water. A proposed development authorized to use an individual on-site potable water source to be permitted by the DOH shall be deemed to have adequate facility capacity.

(2) Sanitary sewer. The multiplier shall be the applicable LOSS standard provided in Section 1.8.3.B. If a non-Marion County sanitary sewer system will be serving a proposed development, the applicant shall submit a certification from that entity that adequate capacity is available and reserved to satisfy the level of service standard for sanitary sewer. A proposed development authorized to use individual OSTDS or non-centralized system to be permitted by the DOH and/or DEP shall be deemed to have an adequate facility capacity.

(3) Solid waste. The multiplier shall be the applicable LOSS standard provided in Section 1.8.3.C. If the Solid Waste Department has stated in the Annual Facility Capacity Statement that adequate facility capacity exists for all projected needs for the following year then this statement will serve as a finding of concurrency for all development orders issued through the year.

(4) Drainage. Concurrency evaluation for drainage is done on a site specific basis. The level of service standard is applied directly to the proposed development site. The evaluation is done in accordance with the Marion County Land Development Code and the applicable Water Management District requirements.

(5) Traffic - roads.

(a) Trip generation shall be based on the Marion County Traffic Impact Fee data and analysis, as amended; however; if the land use impact fee types are not applicable to the development then the following may be proposed by the applicant, subject to Growth Services Director and County Engineer approval, with appeal to DRC:

1. Rates from the latest available Institute of Transportation Engineers (ITE) Trip Generation Manual, or

2. Locally derived trip generation rates based on studies performed, or approved and verified by the County.

(b) Trip distribution analysis shall be provided by the applicant to determine the amount of traffic added to impacted roads segments. For projects generating less than 100 average daily trips, trips may be assigned by County staff.

(c) Impacted roads shall be determined by using the average trip length as specified in the Marion County Traffic Impact Fee data and analysis, as amended plus those road segments operating at LOS A, B, C or D which the development application would add five percent or more of the LOS D service volume to the peak hour; or, those road segments operating at LOS E or F which the development application would add two percent or more of the LOS D service volume to the peak hour, peak direction.

(d) The amount of traffic added to each impacted road segment will be subtracted from that road segment's available capacity to determine concurrency.

C. Adequate capacity determination. When there is adequate capacity in all public facilities for a final development order, the following shall apply:

(1) The appropriate capacity reservation fees shall be paid by the owner within 15 working days following DRC approval of the development application.

(a) In the event the owner fails to provide the required capacity reservation fees, the DRC's development application approval is void.

(b) The concurrency approval granted in conjunction with a development application, based upon the details of the application, shall run with the land and be valid for the time period of the corresponding development application. A reservation of capacity provided by the concurrency approval shall expire with the corresponding development application. In the event that a time extension is granted for a development application, then the concurrency approval shall be automatically renewed for the length of the time extension.

(c) Any modifications made to the development application may require another concurrency review and approval. In the case of a staged or phased project where only a portion of a prior or preceding plan is submitted for final development order approval, the concurrency approval applies only to that part of the project which is attaining final approval with the concurrent development application.

(d) Concurrency approval is specifically limited to the details of the corresponding development application and its final development order and any development conditions, including phasing. In these cases, the final development application shall be reviewed to ensure compliance with any applicable previously granted concurrency approval.

(e) If the land use, density, or intensity of the development project changes, another concurrency review and approval will be required.

(2) The reserving of capacity shall occur on a first-come, first-serve basis. However, a functional concurrency review application, either development application or independent application, can supersede an application ahead of it, only if sufficient capacity is available to serve the current and prior applications.

(3) If applicable, any final concurrency approval will specify any improvements to be made and include a scheduled for their completion. For concurrency approval related to a development application, such improvements may be specified on the development application. For an independent concurrency application approval, such improvements may be specified in a developer agreement pursuant to county Code.

(4) Concurrency approval does not relieve an owner and/or applicant from complying with all requirements necessary to obtain a final development order and does not vest an owner and/or applicant with the right to obtain subsequent development orders for the same development project.

(5) The capacity reservation fee, or portion thereof, can be refunded if the development application does not proceed only if the County and any other provider of capacity has note expended or obligated the money for pre-construction costs or construction of public facilities. A refunding of the capacity reservation fee will result in withdrawal of concurrency approval for the development application or independent concurrency application; however an owner/applicant is not precluded from applying for a new/updated concurrency review and approval.

D. Inadequate capacity determination. When the concurrency evaluation system determines there is not adequate available capacity in one or more of the public facilities, the following shall apply:

(1) The applicant will be notified as part of the DRC development application review process, or receive specific comments in response to a submitted independent concurrency application.

(2) The applicant shall elect one of the following actions in regards to the inadequate facility:

(a) Mitigate the deficiency by:

1. Altering the design or size of the development in order that all capacities will be adequate;
2. Break the project into several smaller projects or phases and obtain approvals for each as a separate project;
3. Propose that the applicant enter into a development agreement with the appropriate party responsible for each deficient public facility, wherein the Agreement specifies the methods to provide the development's proportionate share of additional capacity via proportionate share payment and/or improvements which eliminate and/or mitigate the development's proportionate share of deficiencies prior to the development project's impact, consistent with Ch. 163 FS. In the case of road segment deficiencies, the use of access control, intersection improvements, and improvements to alternative routes and other transportation system management and transportation demand management strategies may be accepted by the County as methods to increase facility capacity.
4. Submit alternate data demonstrating greater capacity or less impact than has been calculated by the County or other entity responsible for the public facility, using a methodology acceptable to the County and/or responsible entity. In the case of road segment deficiencies, the applicant may prepare a more detailed capacity analysis using methods acceptable to the County; or

(b) Delay the project until capacity is available; or

(c) Accept denial and withdraw the development application.

(3) The applicant has 10 working days to submit one of the above options in response to a deficiency determination. The pending demand status of either application type may be extended an additional 30 calendar days to complete a mitigation alternative. In the case of mitigation, the mitigation plan shall be forwarded to DRC for review and recommendation either along with the accompanying development application or as an independent application, and then on to the Board or applicable public facility controlling entity.

(4) Development Agreement. Development agreements shall follow the procedures and requirements of the county Code, as applicable.

E. Capacity Reservation Fee

(1) Capacity reservation fees shall be calculated in the same manner as provided in the corresponding Marion County fee ordinances as follows:

(a) Transportation – Marion County Impact Fee Ordinance for Transportation Facilities;

(b) Utilities – Marion County Utilities Capital Charges, or if for a non-Marion County provider of the facility, as set forth in that provider's capital charge standards;

(c) Schools – Marion County Impact Fee Ordinance for Education Facilities.

(2) The form of payment shall be established by the Board, or the non-Marion County provider as applicable. Improvements or contributions made for off-site improvements, particularly road improvements, shall be credited to capacity reservation fees.

(3) The timing of payment shall be divided into two (2) stages which, at a minimum, comply with the following schedule:

(a) Fifty percent (50%) at concurrency approval.

(b) Fifty percent (50%) at issuance of Certificate of Occupancy, or equivalent.

(4) Capacity reservation fees provided to obtain concurrency approval shall be credited to their respective facility impact fee and/or capacity charge, unless said fees were refunded to the applicant as provided in this Section.

Sec. 1.8.7 Off-site improvements.

A. The purpose of this section is to insure that new development contributes its pro-rata share allocation of the costs for off-site improvements. As a condition of approval for a development application or an independent concurrency application, the County may require an applicant to pay a proportionate share of the cost of providing reasonable and necessary public facilities, including land and easements, located off-site of the property limits of the development, but necessitated or required by the development. Necessary improvements are those clearly and substantially related to the development in question. The County shall provide in its approval, the basis of the required improvements. The capacity and design of the proposed improvements shall be based upon the level of service standards adopted in the Comprehensive Plan. The proportionate amount of the cost of such facilities within a related or common area shall be based on the criteria in Section B below.

B. Cost allocation.

(1) Full Allocation. In cases where off-site improvements are necessitated by the proposed development, and where no other property owner receives a benefit thereby, the applicant may be required at his sole expense and as a condition of approval, to provide and install such improvements.

(2) Proportionate Allocation. Where it is determined through the use of design criteria specified in Article 6 that properties outside the proposed development will also be benefitted by the off-site improvement(s), the following criteria shall be utilized in determining the proportionate share of the cost of such improvements to be borne by the developer:

(a) Roads. The applicant's proportionate share of street improvements, widening, alignment, channelization, barriers, new or improved traffic signalization, signs, curbs, sidewalks, utility improvements not covered elsewhere, the construction or reconstruction of new or existing streets, and other associated street or traffic improvements shall be as follows:

1. The County shall provide the applicant with the existing and reasonably anticipated future peak hour traffic flows for the off-site improvements.

2. If the existing system does not have adequate capacity as defined above, the pro-rata share shall be computed as follows: Developer's Cost = Total Cost of Improvement x Development Peak Hour Traffic to be accommodated by Improvement ÷ Peak Hour Capacity of Improvement.

(b) Sanitary Sewer. The applicant's proportionate share of collection facilities including the installation, relocation, or replacement of collector, trunk and interceptor sewers, treatment and disposal facilities and associated appurtenances, shall be computed as follows:

1. The capacity and the design of the sanitary sewer system shall be based on the standards specified in Article 6 of this Code.

2. For a Marion County facility, the County Utilities Director shall provide the applicant with the existing and reasonably anticipated peak hour flows as well as capacity limits of the affected sanitary sewer system. For a non-Marion County facility, the utility provider shall provide the applicant with the existing and reasonably anticipated peak hour flows as well as capacity limits of the affected sanitary sewer system.
3. If the existing sanitary sewer system does not have adequate capacity to accommodate the applicant's flow given existing and reasonably anticipated peak hour flows, the pro-rata share shall be computed as follows: Developer's Cost = Total Cost of Improvement x Development Generated GPD to be accommodated by improvement ÷ Capacity of Improvement (GPD).

(c) Water Supply. The applicant's proportionate share of water supply and distribution facilities including the drilling of wells, installation of pumps, construction of storage tanks, the installation, relocation or replacement of water mains, fire hydrants, valves and associated appurtenances shall be computed as follows:

1. The capacity and the design of the water supply system shall be based on the standards specified in Article 6 of this Code.
2. For a Marion County facility, the County Utilities Director, shall provide the applicant with the existing and reasonably anticipated capacity limits of the affected water supply system in terms of average demand, peak demand, and fire demand. For a non-Marion County facility, the utility provider shall provide the applicant with the existing and reasonably anticipated capacity limits of the affected water supply system in terms of average demand, peak demand, and fire demand.
3. If the existing water system does not have adequate capacity as defined above to accommodate the applicant's needs, the pro-rata share shall be computed as follows: Developer's Cost = Total Cost of Improvement x Development Generated GPD to be accommodated by Improvement ÷ Capacity of Improvement (GPD)

(d) Drainage Improvements. The applicant's proportionate share of storm water and drainage improvements including the installation, relocation, or replacement of storm drains, culverts, catch basins, manholes, riprap, improved drainage ditches and appurtenances, and relocation or replacement of other storm drainage facilities, or appurtenances shall be determined as follows:

1. The capacity and the design of the drainage system to accommodate storm water runoff shall be based on the standards specified in Article 6 of this Code, computed by the developer's engineer and approved by the County Engineer.
2. The capacity of the enlarged, extended, or improved system required for the subdivision and areas outside of the developer's tributary to the drainage system shall be determined by the developer's engineer subject to approval of the County Engineer. The plans for the improved system shall be prepared by the developer's engineer and the estimated cost of the enlarged system calculated by the County Engineer. The pro-rata share for the proposed improvement shall be computed as follows: Developer's Cost = Total Cost of Improvement x Development Generated Peak Rate of runoff expressed in cubic feet per second to be accommodated by the Improvement ÷ Capacity of Improvement (Capacity expressed in cubic feet per second).

(e) Other Improvements. The applicant's proportionate share of other capital improvements shall be computed as follows:

1. Developer's Cost = Total Cost of Improvement x Development Share of Improvement ÷ Capacity of Improvement.

C. Escrow accounts. Where the proposed off-site improvement is to be undertaken at some future date, the monies required for the improvement shall be deposited in a separate interest-bearing account to the credit of the County until such time as the improvement is constructed.

Article 2 Application Type and Standard Requirements

Division 1 General Provisions

Sec. 2.1.1 Purpose.

The purpose of this article is to establish the standard requirements and procedures for development applications described in this article including Comprehensive Plan and Code amendments. These procedures are intended to provide orderly and expeditious processing of such applications.

Sec. 2.1.2 Concurrent review procedures.

Applications shall, at the request of the applicant, be allowed to be reviewed concurrently. Documents shall be submitted in accordance with the provisions of the applicable sections of this article.

Sec. 2.1.3 Order of plan approval.

Plans may be reviewed concurrently, but must be approved in the order as listed below, when applicable and when the proper land use and zoning are in place:

A. Master Plan.

B. Preliminary Plat.

C. Improvement Plan.

D. Final Plat.

E. Major Site Plan. However, a Major Site Plan can be substituted for the Improvement Plan and can be approved before approval of the Final Plat in cases when the infrastructure improvements supporting the plat are proposed as part of the Major Site Plan application.

Sec. 2.1.4 Application content.

A. An application for development shall include the items specified in the applicable section of this article, and all other articles and shall be complete prior to starting the review process. For technical and design sufficiency, an application shall, as applicable, comply with the requirements of related articles and/or divisions of these Codes.

B. Any application which fails to provide the items listed within shall be deemed incomplete. An incomplete application shall not proceed through the review process and shall be returned to the applicant and any fees paid shall be refunded or returned as applicable.

Sec. 2.1.5 Change of project's name, surveyor, or design professional.

A. Change of a project's name may be requested at any time prior to final approval. The request must be by written notice from the developer, project surveyor, or design professional to the Office of the County Engineer, with a copy to the Growth Services Department.

B. Change of the project surveyor or design professional at any time after the submission of a development application shall require written notification to the Office of the County Engineer from the developer.

Sec. 2.1.6 Resubmittals.

A. Resubmittals necessitated by the applicant's revisions or errors shall be accompanied by a resubmittal fee as established by the Board. The fee schedule is available at the Office of the County Engineer.

B. The applicant may replace individual sheets in lieu of submitting full plan sets.

C. The applicant may redline the plans for minor changes as allowed by staff.

Sec. 2.1.7 Revisions to previously approved plans.

A. All revisions shall be accompanied by a resubmittal fee as established by the Board. The fee schedule is available at the Office of the County Engineer.

B. Revisions may be a full plan submittal or specific sheets on which changes were made.

C. The appropriate number of plans for the type of plan being revised shall be submitted for a full staff review.

D. The applicant shall identify what changes were made from the original approved plans.

Sec. 2.1.8 Withdrawal of application. At the written request of the applicant or as a verbal request on record, an application shall be withdrawn. The fee paid shall not be refunded.

Division 2 Pre-Application Meeting

Sec. 2.2.1 Applicability.

For the purpose of expediting application approval and reducing the cost of development, applicants are encouraged to request a pre-application meeting with County staff to review the feasibility of the project and to obtain information and guidance from the County.

Sec. 2.2.2 Submittal requirements.

A. Pre-application meeting requests, by letter or email, shall be submitted to the Office of the County Engineer.

B. There shall be no fee required for the pre-application meeting.

C. The applicant should submit the following:

(1) The parcel number.

(2) A location map depicting the site.

(3) A Conceptual Plan, which is encouraged but not required.

Sec. 2.2.3 Review and approval procedures.

The pre-application meeting is optional and is intended to assist the applicant with future submittals.

Sec. 2.2.4 Completion and close out.

The applicant, at his option, may submit to the Development Review Committee (DRC) a brief written summary of the pre-application meeting minutes within 10 working days after the meeting and request that the summary be scheduled for discussion at the next available DRC meeting.

Division 3 Comprehensive Plan Amendment

Sec. 2.3.1 Applicability.

A. Proposals to amend, modify, or change a component of the adopted Marion County Comprehensive Plan as described in Article 3, Division 1, shall be considered and initiated by the filing of the appropriate Comprehensive Plan Amendment Application (CPAA).

B. The Growth Services Department shall provide for the processing of CPAA types, consistent with the provisions of Ch. 163 FS, as follows:

(1) Small Scale Future Land Use Map Amendment – to be filed for the purpose of amending the Future Land Use Designation(s) of real property as depicted on the Marion County Comprehensive Plan Future Land Use Map Series Map 1 in regards to a parcel, part of a parcel, or series of parcels wherein the land use amendment area does not exceed a total of 10 gross acres in size as established by Ch. 163 FS;

(2) Large Scale Map Amendment – to be filed for the purpose of amending the Future Land Use Designation(s) of real property as depicted on the Marion County Comprehensive Plan Future Land Use Map Series Map 1 in regards to a parcel, part of a parcel, or series of parcels without regard to the gross acreage of the land use amendment area consistent with the provisions of Ch. 163 FS;

(3) Large Scale Text Amendment - to be filed for the purpose of amending the text or other reference maps and materials which are part of the adopted Marion County Comprehensive Plan;

(4) Small Scale Text Amendment – to be filed for the purpose of amending the text or other reference maps and materials which are part of the adopted Marion County Comprehensive Plan wherein the proposed amendment is specifically related to a concurrent amendment to the Marion County Comprehensive Plan Future Land Use Map Series Map 1; and

(5) The Growth Services Department may opt to provide a multi-purpose CPAA which accommodates the submission for any of the CPAA types listed in items (1) – (4).

Sec. 2.3.2 Submittal requirements.

A. All CPAAs shall be obtained from and submitted to the Growth Services Department.

B. A fee in the amount established by resolution of the Board shall accompany the CPAA. The fee schedule is available from the Growth Services Department.

C. The Growth Services Department shall review each application for adequacy and completeness. The application will not be considered complete until the following items have been submitted:

(1) A completed CPAA, including all necessary supporting documentation as set forth in the CPAA.

(2) All material and information necessary to demonstrate that the granting of the amendment is consistent with the Marion County Comprehensive Plan, and Ch. 163 FS.

(3) For a CPAA affecting specific real property, the following shall be provided at a minimum:

a. Signed/executed owners authorization statement(s) naming each individual having legal or equitable ownership of the subject property;

b. Notarized letter of authorization form for each owner authorizing the indicated applicant to act on the owner's behalf if the applicant is other than the owner(s);

c. Most recent warranty deed;

d. Signed and sealed boundary survey of property which also shows the surrounding and adjacent land uses within three hundred (300) feet of property. The surrounding land uses do not need to be surveyed, rather the land use designations shall be recorded on the survey;

e. Proposed/Requested Future Land Use Designation(s) for the real property;

f. Existing Zoning Classification(s) and Land Use Designation(s) for the real property and all property abutting the real property;

g. A Traffic Impact Analysis shall be provided which is based on the maximum estimated traffic generation of the proposed Future Land Use Designation(s). The study level of the analysis shall comply with the County Traffic Impact Analysis Guidelines available at the Office of the County Engineer; and

h. Any additional information determined to be necessary to analyze the CPAA to address consistency and compliance with the Marion County Comprehensive Plan, Marion County Land Development Code, and/or Ch. 163 FS.

Sec. 2.3.3 Review and approval procedures.

A. The timing for the submission and general processing of all CPAA types shall be established by the

Board, consistent with the provisions of Ch. 163 FS, as applicable.

B. A CPAA shall be reviewed for compliance and consistency with the Marion County Comprehensive Plan and Ch. 163 FS, pursuant to the provisions of this Division and Article 3, Div #.

C. The Amendment shall be enacted by adopted ordinance consistent with the provisions of Article 1, Division 3, and Article 3, Division #, and Ch. 163 FS.

D. The Amendment shall not be deemed to be effective unless and until an affirmative "Notice of Intent," or its equivalent, has been issued and the effective date of the adopting ordinance has been satisfied.

Sec. 2.3.4 Completion and close out.

A. The Growth Services Department shall publish a revision to the Marion County Comprehensive Plan incorporating the Amendment.

B. At the applicant's request, the Growth Services Department shall issue a written notice confirming the completed status of the Amendment.

Division 4 Land Development Code Amendment

Sec. 2.4.1 Applicability.

Proposals to amend, modify, or change a component of the adopted Marion County Land Development Code (LDC) shall be considered and initiated by the filing of an application or shall be initiated by the Board. Ordinances initiated by the Board which do not actually change the zoning classification applicable to a piece of property but do affect the use of land, including amendments to this Land Development Code, regardless of percentage of the total land area of the County actually affected, shall be enacted or amended under this division.

Sec. 2.4.2 Submittal Requirements.

A. All proposals to amend the LDC shall be submitted to the Growth Services Department.

B. A fee in the amount established by resolution of the Board shall accompany the application. The fee schedule is available at the Growth Services Department and the Office of the County Engineer.

Sec. 2.4.3 Review and approval procedures.

A. The proposed amendment language shall be reviewed by staff and shall be placed on the agenda of the Land Development Regulation Commission (LDRC) for review and consideration.

B. Public hearing.

(1) The LDRC shall hold a public hearing after due public notice as defined in Section 2.2, to consider proposed amendments to the LDC.

(2) In making a recommendation for approval to the Board, the LDRC shall make a written finding that the proposed amendment is consistent with the Marion County Comprehensive Plan.

(3) If the LDRC recommends denial of the proposed amendment, it shall state in writing its findings of fact and reasons for denial.

Sec. 2.4.4 Completion and close out.

A. The Board shall hold public hearings to consider recommendations from the LDRC for approval or denial of proposed LDC amendments. The Board shall provide for public notice and hearings as follows:

(1) The Board shall hold two advertised public hearings on the proposed ordinance. At least one hearing shall be held after 5:00 p.m. on a weekday, unless the Board, by a majority plus one vote elects to conduct that hearing at another time of day. The first public hearing shall be

held at least seven days after the day that the first advertisement is published. The second hearing shall be held at least ten days after the first hearing and shall be advertised at least five days prior to the public hearing.

(2) The required advertisements shall be no less than two columns wide by ten inches long in a standard size newspaper and the headline in the advertisement shall be in a type no smaller than 18 point and shall comply with the provisions of § 125.66(4) FS.

B. Board decisions, appeals. All recommendations for a LDC amendment shall be approved or denied by a majority vote of the Board members present and voting at the public hearing of the Board. If the vote of the Board results in a tie vote, the tie vote may operate as a deferral to the next Board public hearing or date otherwise designated by the Board and the Board may defer the Amendment until a full Board is present. Appeal of any decision of the Board granting or denying a LDC amendment shall be made by filing a Petition for Writ of Certiorari with the Circuit Court in Marion County within 30 days of rendition of the decision to be reviewed.

Division 5 Scenic Roads Amendment Application (SRAA)

Sec. 2.5.1 Applicability.

A. Proposals to amend the list of designated facilities in Section 5.6.3, or obtain an authorized improvement exemption for a designated facility as provided in Section 5.6.5, shall be considered and initiated by the filing of a SRAA, consistent with the provisions of this Division and Section 5.6.6.

B. A SRAA may be initiated by an individual applicant, or a representing agent of the Board when related to a Marion County project; however all SRAAs shall be considered consistent with the applicable provisions of this Division and Section 5.6.6.

Sec. 2.5.2 Submittal requirements.

A. Timing.

(1) SRAAs to amend the list of designated facilities in Section 5.6.3 shall be accepted one-time per calendar year, or as established by the Board.

(2) SRAAs to obtain authorization for improvement exemptions as provided in Section 5.6.5 shall be accepted monthly, or as may be established by the Board.

B. A SRAA may be obtained from the Growth Services Department.

C. A SRAA shall include all material and information required on the SRAA, including that information necessary to demonstrate the request is consistent with the intent and purpose of the Scenic Roads Area provided in Division 5.6 and the Scenic Roads Master Plan, as applicable.

D. A fee in the amount established by resolution of the Board of County Commissioners shall accompany the application. The fee schedule is available at the Growth Services Department and the Office of the County Engineer.

Sec. 2.5.3 Review and approval procedures.

A. A SRAA shall be reviewed by staff for compliance with the submittal requirements; once deemed complete, the review process established herein and in Section 5.6.6 shall apply.

B. A SRAA shall be reviewed by staff for consistency with the intent and purpose of the Scenic Roads Area provided in Division 5.6 and the Scenic Roads Master Plan, as applicable. A staff recommendation regarding the SRAA shall be prepared, followed by a two public hearing(s) to consider the SRAA: the first before the Land Development Regulation Commission (LDRC), with the second and final before the Board, consistent with the provisions of Section 5.6.6.

C. A SRAA, if approved, shall be enacted by the Board, consistent with Ch. 125 FS and Section 5.6.6, and appropriately published by the County as directed by Division 5.6.

Sec. 2.5.4 Completion and close out.

A. The Growth Services Department shall publish an approved update and/or revision to the County's Scenic Roads Program and, ultimately, the Land Development Code and/or list of improvement exemptions consistent with Division 5.6.

B. At the applicant's request, the Growth Services Department shall issue a written notice confirming the completed status of the SRAA.

Division 6 Transfer of Rights Programs (TRPs) Applications

Sec. 2.6.1 Applicability.

A Transferrable Development Credit Application (TDCA) is required in order to obtain, transfer, or acquire and use Transferrable Development Credits (TDCs) under one of the Transfer of Rights Programs (TRPs). The TDCAs consist of the following types:

(1) Application to Participate in Transfer of Development Rights Program – filed to apply for the issuance of TDCs under the Transfer of Development Rights Program (TDR) in relation to a proposed Sending Area site.

(2) Application to Participate in Transfer of Vested Rights Program – filed to apply for the issuance of TDCs under the Transfer of Vested Rights Program (TVR) in relation to a proposed Sending Area site.

(3) The transfer/exchange of TDCs between parties requires concurrent filing the following two TDCAs:

(a) Assignment of Development Credits by Holder – to be filed by the party (grantor) who holds the TDCs, whether the grantor is the original party receiving the initial issuance of the TDCs or a subsequent party who received the TDCs and is transferring them to a subsequent grantee.

(b) Statement of Utilization of Transferable Development Credits – to be filed by the party (grantee) receiving the TDCs.

(4) An option to provide a multi-purpose TDCA which accommodates the submission for any of the TDCA types listed in items (1)-(3) may be allowed at the County's discretion.

Sec. 2.6.2 Submittal requirements.

A. All TDCAs shall be obtained from and submitted to the Growth Services Department.

B. A fee in the amount established by resolution of the Board shall accompany the application. The fee schedule is available at the Office of the County Engineer.

C. The Growth Services Department shall review each TDCA for adequacy and completeness. The TDCA will not be considered complete until the following items have been submitted for each respective application type:

(1) For an Application to Participate in TDR/TVR Program, as appropriate:

(a) An appropriate completed TDCA, including all necessary supporting documentation as set forth in the TDCA.

(b) All material and information necessary to demonstrate the subject property qualifies as a Sending Area and is eligible for participation within the corresponding TDR/TVR Program.

(c) A signed and executed Petition to Participate in TDR/TVR Program, as appropriate, from each property owner holding title to the subject property of the corresponding TDCA.

(2) For a request to transfer/exchange TDCs from Grantor to Grantee:

(a) An appropriate completed Assignment of Development Credits by Holder from each party holding (Grantor) the TDCs, including all necessary supporting documentation as set forth in

the TDCA.

(b) An appropriate signed and executed Statement of Utilization of Transferable Development Credits from each property owner (Grantee) holding title to the subject property identified as the receiving site for the corresponding TDCA.

(c) All material and information necessary to demonstrate the subject property qualifies as a Receiving Area and is eligible for participation within the corresponding TDR/TVR Program.

D. A TDCA which fails to provide the items listed in this Section shall be deemed incomplete. An incomplete TDCA shall not be proceed through the review process and shall be returned to the applicant.

Sec. 2.6.3 Review and approval procedures.

A. TDCAs may be submitted at any time.

B. A complete TDCA shall be reviewed by the Growth Services Department for consistency with the Marion County Comprehensive Plan and the provisions of Article 3, which shall then complete a written staff report listing the Department's analysis and recommendation regarding the TDCA within 20 working days of determination the TDCA is complete.

C. The Growth Services Department's completed staff report and recommendation shall be scheduled for presentation to and consideration by the Board at its next available regularly scheduled meeting.

D. The Board shall consider the Growth Services Department's review and recommendation and applicant presented information and determine the consistency of the TDCA with the Marion County Comprehensive Plan and Article 3, Division 5.

E. The Board may act to:

(1) Approve the TDCA as recommended,

(2) Approve the TDCA with modification as specified by the Board,

(3) Deny the TDCA, or

(4) Continue or table consideration of the TDCA with direction to staff and/or the applicant to provide additional information as specified by the Board.

F. When the Board has approved creating and granting new TDCs, the Chair shall execute the two following TDCA documents in regards to the subject property for which the TDCs are issued:

(1) Conservation Easement

(2) Statement of Issuance for Transferrable Development Credits.

G. When the Board has approved a transfer of TDCs between parties, the Chair shall execute the two following TDCA documents in regards to the subject property for which the TDCs are issued:

(1) Assignment of Development Credits

(2) Statement of Utilization of Transferable Development Credits.

H. When the Board has denied creating and granting new TDCs to a subject property, a new TDCA to create and grant TDCs to any or all of the subject property may not be submitted for a period of 180 days from the date of denial.

I. When the Board has denied a transfer of TDCs to a subject property, a new TDCA to transfer TDCs to any or all of the subject property may not be submitted for a period of 180 days from the date of denial.

Sec. 2.6.4 Completion and close out.

A. Upon approval or modified approval, the executed TDC documents identified in Sections 3.5.3(F) or (G), as appropriate, shall be executed by the Board Chair and returned to the Growth Services Department within 7 working days of the date of approval.

B. The Growth Services Department shall transmit the executed TDC documents to the applicant within 14 working days of the date of approval.

C. The applicant shall be responsible for recording the executed TDC documents in the Marion County Public Records within 20 working days of the date of approval.

D. The applicant shall be responsible for providing one (1) certified copy of the recorded TDC documents to the Growth Services Department within 10 working days of the date of recording.

E. Upon receipt of the certified TDC document copies, the TDCA shall be deemed complete, and the Growth Services Department shall update the Transfer of Rights Program information available to the public at the next available opportunity.

Division 7 Zoning Change

Sec. 2.7.1 Applicability.

A. An application for the rezoning of a parcel of land may be obtained from the Growth Services Department. The application shall include all material and information, including proposed densities and intensities, necessary to demonstrate that the granting of the rezoning request will be consistent with the adopted Comprehensive Plan and any amendments thereto; and will be compatible with the surrounding area.

B. Rezoning of property initiated by the Board without application by the property owner shall be enacted pursuant to the following procedures:

(1) In cases in which the proposed ordinance changes the actual zoning map designation for a parcel or parcels of land involving less than ten contiguous acres the Board shall provide due public notice and shall notify by registered mail each real property owner whose land the Board proposes to redesignate. The notice shall state the substance of the proposed ordinance as it affects that property owner and shall set a time and place for a public hearing. Such notice shall be given at least 30 days prior to the date set for the public hearing before the Board, and a copy of such notice shall be kept available for public inspection during the regular business hours at the office of the Planning/Zoning Manager.

(2) In cases in which the proposed ordinance changes the actual list of permitted, conditional, or prohibited uses within a zoning category, or changes the actual zoning map designation of a parcel or parcels of land involving ten contiguous acres or more, the Board shall provide for public notice and hearings as follows:

(a) The Board shall hold two advertised public hearings on the proposed ordinance. At least one hearing shall be held after 5:00 p.m. on a weekday, unless the Board, by a majority plus one vote elects to conduct that hearing at another time of day. The first public hearing shall be held at least seven days after the day that the first advertisement is published. The second hearing shall be held at least ten days after the first hearing and shall be advertised at least five days prior to the public hearing.

(b) The required advertisements shall be no less than two columns wide by ten inches long in a standard size newspaper and the headline in the advertisement shall be in a type no smaller than 18 point and shall comply with the provisions of § 125.66(4) FS.

Sec. 2.7.2 Submittal Requirements.

A. A formal application for the rezoning of a parcel of land may be obtained from the Growth Services Department. The rezoning application shall include a deed, legal description and all material and information, including proposed densities and intensities, necessary to demonstrate that the granting of the rezoning request will be consistent with the adopted Comprehensive Plan and any amendments thereto; and will be compatible with the surrounding area. For application requirements to rezone to PUD, see Section 2.11 Conceptual Plan.

B. A fee in the amount established by resolution of the Board shall accompany the application. The fee schedule is available at the Growth Services Department and the Office of the County Engineer.

Sec. 2.7.3 Review and approval procedures.

A. Public hearings related to this application request are set for the calendar year and the schedule is available from the Growth Services Department. A normal Zoning Change application cycle will take 90± days to complete.

B. A public notice shall be posted on the property giving the particulars of the proposed rezoning and the date, time and place of the required public hearings.

C. All property owners within 300 feet of the boundaries of the property subject to rezoning shall be notified by mail of the proposed rezoning with said notice giving the particulars of the proposed rezoning; the date, time and place of the required public hearings; and a phone number which may be called for additional information. The latest data from the County Property Appraiser's Office obtained within the 30 day period preceding the public hearing, giving the name and address of adjacent property owners within 300 feet of the boundaries of the property subject to rezoning shall be used for mailing the written notifications of the proposed rezoning.

D. A visit to the site will be made by a representative of the Growth Services Department staff who will prepare a written recommendation as to the proposed rezoning consistency with the current Comprehensive Plan. This recommendation will be given to the applicant and made available to the public prior to the public hearings.

E. Public hearing – Planning and Zoning (P&Z) Commission.

(1) The P&Z shall hold a public hearing after due public notice as defined in Section 1.2.2, herein to consider applications for the rezoning of property as set forth in Section 1.3.7.

(2) In making a recommendation to the Board, the P&Z shall make a written finding that granting the rezoning will not adversely affect the public interest, that the proposed zoning change is consistent with the current Comprehensive Plan, and that it is compatible with land uses in the surrounding area.

(3) If the P&Z recommends denial of the proposed rezoning, it shall state in writing its findings of fact and reasons for denial.

Sec. 2.7.4 Completion and close out.

A. Public hearing. The Board shall hold a public hearing after each P&Z public hearing with due public notice as defined in Section 1.2.2 herein, to consider recommendations from the P&Z for approval or denial of proposed rezoning.

B. When the Board has denied an application for a rezoning, no applicant shall submit an application for a rezoning for any part or all of the same property for the same zoning classification for a period of 12 months from the date of denial unless the property is incorporated, annexed or there is a Comprehensive Plan amendment which would affect the area.

C. Applicant's request for withdrawal. At the request of the applicant, the P&Z or the Board shall permit withdrawal of an application. The fee paid shall not be refunded.

D. Applicant's request for continuance. At the request of an applicant and for good cause shown, the P&Z or the Board may continue the public hearing on an application for rezoning. The applicant shall be required to pay an additional application fee to cover the cost of re-advertising and re-notifying the adjacent property owners. The P&Z or the Board shall not grant an applicant's request for continuance when the application is the result of a notice of zoning code violation and the rezoning is necessary to cure such violation. The applicant will not be required to pay an additional application fee if the continuance is granted by the P&Z or the Board, on their own initiative, when deemed necessary or desirable.

E. Board decisions, appeals. All applications requesting a rezoning shall be approved or denied by a majority vote of the Board members present and voting at the public hearing of the Board to consider the application. If a vote of the Board results in a tie vote, the tie vote shall operate as a deferral to the next zoning public hearing or date otherwise designated by the Board. Appeal of any decision of the Board granting or denying a rezoning application shall be made by filing a Petition for Writ of Certiorari with the Circuit Court in Marion County within 30 days of rendition of the decision to be reviewed.

Division 8 Special Use Permit

Sec. 2.8.1 Applicability.

Uses not specifically permitted by this Code in any zoning classification may be permissible and shall require a Special Use Permit (SUP). The listing of permitted uses in a zoning classification is not meant to be all inclusive.

Sec. 2.8.2 Submittal requirements.

A. A formal written application for a SUP on a form provided by the Growth Services Department is submitted to the Planning/Zoning Manager indicating the section of this Code under which the SUP is sought and stating the grounds on which it is requested.

B. A fee in the amount established by resolution of the Board shall accompany the application. The fee schedule is available at the Growth Services Department.

C. A Conceptual Plan prepared in accordance with the provisions of Article 6 and at an appropriate scale showing proposed placement of structures on the property, provisions for ingress and egress, off-street parking and off-street loading areas, refuse and service areas, and required yards and other open spaces.

(1) Plans for screening and buffering with reference as to type, dimensions and character. Where additional requirements on the preparation of conceptual plan is required to demonstrate the General Findings below, those requirements shall be met.

(2) Proposed locations for utilities including water and sewer.

D. The application shall include a description of the following findings. The P&Z may make further written findings that the specific requirements, if any, governing the individual SUP, excluding towers, have been made concerning the following matters, where applicable:

(1) Provision for ingress and egress to property and proposed structures thereon with particular reference to automotive and pedestrian safety and convenience, traffic flow and control and access in case of fire or catastrophe.

(2) Provision for off-street parking and loading areas, where required, with particular attention to the items in (1) above and the economic, noise, glare, or odor effects of the SUP on adjoining properties and properties generally in the surrounding area.

(3) Provisions for refuse and service area, with particular reference to the items in (1) and (2) above.

(4) Provision for utilities, with reference to locations, availability and compatibility.

(5) Provision for screening and buffering of dissimilar uses and of adjacent properties where necessary.

(6) Provision for signs, if any, and exterior lighting with consideration given to glare, traffic safety, economic effects and compatibility and harmony with properties in the surrounding area.

(7) Provision for required yards and other green space.

(8) Provision for general compatibility with adjacent properties and other property in the surrounding area.

(9) Provision for meeting any special requirements required by the site analysis for the particular

use involved.

E. Applications for Telecommunication Towers shall include a description of the following findings. The P&Z may make further written findings that the specific requirements contained in Sections 4.xx + governing a SUP for telecommunication towers has been made concerning the following matters, where applicable:

(1) Setbacks from Parent Property Lines

(2) Certified fall radius

(3) Locational Requirements Relative to Offsite Uses and Zoning

(4) Provisions for Collocation

(5) Tower Clustering

(6) Landscaping, Screening and Buffers

(7) Lighting of Tower

(8) Color of Tower

(9) Building design and blending of tower facilities to the natural setting and built environment

(10) Antenna Compatibility

(11) Signage

(12) Security Fencing

(13) Inventory of Existing Sites

(14) Compliance with current standards and regulations of the FAA, the FCC and any other Federal governmental agency with the authority to regulate towers and antennas

(15) Building Codes and Standards

(16) Provision of parking spaces and provisions for removal of refuse

(17) Provision for utilities

(18) Provisions for general compatibility with adjacent properties and other property in the surrounding area

F. Findings and submittal requirements for Mining applications as specified in Article 4.

These findings and recommendations shall be forwarded to the Board for review and approval.

Sec. 2.8.3 Review and approval procedures.

A. Public hearings related to this application request are set for the calendar year and the schedule is available from the Growth Services Department. A normal SUP application cycle will take 90± days to complete.

B. The Growth Services Department shall review the application for a SUP and shall make recommendations to the P&Z respecting the applications' consistency with the Comprehensive Plan.

C. If the Growth Services Department fails to make a written recommendation to the P&Z by the date the P&Z has set to officially act on the request, the Growth Services Department shall be deemed to have recommended approval of the application and consistency with the Comprehensive Plan.

D. Public hearings. The P&Z shall hold public hearings to consider applications for SUPs in the manner set forth in Subsection 3.1.2.b.

E. P&Z Hearing.

(1) Conditions and safeguards. In recommending any SUP, the P&Z may prescribe appropriate conditions and safeguards in conformity with this Code.

(2) Time limit. The P&Z may recommend a reasonable time limit within which the use for which the SUP is required to be started or completed.

(3) Denial. If the P&Z recommends denial of a SUP, it shall state fully in writing its reasons for denial. Reasons may include the lack of provisions stated in Section 2.6.2.D above.

Sec. 2.8.4 Completion and close out.

A. The Board shall hold a public hearing after each P&Z public hearing with due public notice as defined in Section 2.2 herein to consider recommendations from the P&Z for approval or denial of SUPs. The decision of the Board shall be final.

B. Applicant's request for withdrawal. At the request of the applicant the P&Z or the Board shall permit withdrawal of an application. The fee shall not be refunded.

C. Applicant's request for continuance. At the request of an applicant and for good cause shown, the P&Z or the Board may continue the public hearing on an application for a SUP. The applicant shall be required to pay an additional application fee to cover the cost of re-advertising and re-notifying the adjacent property owners. The P&Z or the Board shall not grant an applicant's request for continuance when the application is the result of a notice of zoning code violation and the SUP is necessary to cure such violation. The applicant will not be required to pay an additional application fee if the continuance is granted by the P&Z or the Board, on their own initiative, when deemed necessary or desirable.

D. Limitation on SUPs. When the Board has denied an application for a SUP, no applicant shall submit an application for a SUP for any part or all of the same property for the same use for a period of 12 months from the date of denial unless the property is incorporated, annexed or there is a Comprehensive Plan Amendment which would affect the area.

E. Board decisions, appeals. All applications requesting a SUP shall be approved or denied by a majority vote of the Board members present and voting at the public hearing of the Board to consider the application. If the vote of the Board results in a tie vote, the tie vote may operate as a deferral to the next zoning public hearing or date otherwise designated by the Board and the Board may defer the application until a full Board is present. Appeal of any decision of the Board granting or denying a SUP application shall be by filing a Petition for Writ of Certiorari with the Circuit Court in Marion County within 30 days of rendition of the decision to be reviewed.

Division 9 Variance

Sec. 2.9.1 Applicability.

A variance is required when zoning requirements cannot be met.

Sec. 2.9.2 Submittal requirements.

A. A formal application for a variance on a form provided by the Growth Services Department is submitted to the Planning/Zoning Manager.

B. A fee in the amount established by resolution of the Board shall accompany the application. The fee schedule is available at the Growth Services Department and the Office of the County Engineer.

C. A variance from the terms of these regulations shall not be granted by the Board of Adjustment unless the written petition for a variance submitted demonstrates that:

(1) Special conditions and circumstances exist which are peculiar to the land, structure or building involved and which are not applicable to other lands, structures or buildings with the same zoning classification and land use area.

(2) The special conditions and circumstances do not result from the actions of the applicant.

(3) Literal interpretation of the provisions of applicable regulations would deprive the applicant of rights commonly enjoyed by other properties with the same zoning classification and land use area under the terms of said regulations and would work unnecessary and undue hardship on the applicant.

(4) The variance, if granted, is the minimum variance that will allow the reasonable use of the land, building or structure.

(5) Granting the variance requested will not confer on the applicant any special privilege that is denied by these regulations to other lands, buildings or structures in the same zoning classification and land use area.

(6) The granting of the variance will not be injurious to the neighborhood or otherwise detrimental to the public welfare.

Sec. 2.9.3 Review and approval procedures.

A. Public hearings related to this application request are set for the calendar year and the schedule is available from the Growth Services Department. A normal variance application cycle will take 60± days to complete.

B. A site visit by the Growth Services Department will be conducted, pictures taken and report prepared for the Board of Adjustments.

C. Notice of public hearing. Due public notice as defined in Section 2.2 shall be given prior to public hearings held by the Board of Adjustment. Said notices shall also inform the recipient that actions of the Board of Adjustment are final.

D. To authorize such variances from the terms of these regulations as will not be contrary to the public interest where, owing to special conditions, a literal enforcement of the provisions of these regulations would result in unnecessary and undue hardship.

Sec. 2.9.4 Completion and close out.

A. Public hearing. The public hearing shall be held by the Board of Adjustment and any party may appear in person, by authorized agent, or by an attorney.

B. Findings. The Board of Adjustment shall make findings that the requirements of this section have or have not been demonstrated by the applicant for a variance.

C. Conditions and safeguards. In granting any variance, the Board of Adjustment may prescribe appropriate conditions and safeguards in conformity with these regulations, including, but not limited to, reasonable time limits within which the action for said variance is required to begin or be completed, or both. Violation of such conditions and safeguards, when made a part of the terms under which the variance is granted, shall be deemed a violation of these regulations.

D. Limitation on power to grant variances. Under no circumstances shall the Board of Adjustment grant a variance to permit a use not permitted under the terms of these regulations in the zoning classification involved, or any use expressly or by implication prohibited by the terms of these regulations in the said zoning classification. No non-conforming use of neighboring lands, structures or buildings in the same zoning classification and no permitted use of lands, structures or buildings in any other classification shall be considered grounds for the granting of a variance. No SUPs shall be granted by the Board of Adjustment.

E. Limitation of variances. When the Board of Adjustment has denied an application for a variance, no applicant shall submit an application for the same variance for a period of 12 months from the date of denial.

F. Request for continuance. At the request of an applicant and for good cause shown, the Board of Adjustment may continue the public hearing on an application for a variance. The applicant shall be required to pay an additional application fee to cover the cost of re-advertising and re-notifying the adjacent property owners. The Board of Adjustment shall not grant an applicant's request for continuance when the application is the result of a notice of zoning code violation and the variance is necessary to cure such violation. The applicant will not be required to pay an additional application fee if the continuance is granted by the Board of Adjustment on their own initiative, when deemed

necessary or desirable.

G. The Board of Adjustment shall have the authority to revoke a variance previously granted upon the submission of facts supporting noncompliance with conditions and safeguards presented by the Board of Adjustment in granting the variance. The Planning/Zoning Manager shall provide written notice by registered mail to the property owner at least 15 days prior to consideration of revocation by the Board of Adjustment, and such written notice shall specify the time, date and meeting place of the Board of Adjustment and the reasons supporting revocation. The Board of Adjustment shall conduct an informal hearing on such revocation and shall adopt findings of fact supporting such revocation.

H. Appeal of any decision of the Board of Adjustment shall be by filing a Petition for Writ of Certiorari with the Circuit Court in Marion County within 30 days of rendition of the decision to be reviewed.

Division 10 Waiver Request

Sec. 2.10.1 Applicability.

The Development Review Committee (DRC) may waive certain code requirements when not applicable to the proposed type of development or where alternative standards may promote flexibility, economy and environmental soundness in layout and design.

Sec. 2.10.2 Varying design standards.

DRC, in reviewing development plans, may waive certain design and improvement standards herein, where a developer can demonstrate the following:

(1) The alternative standards promotes flexibility, economy and environmental soundness in layout and design; and

(2) The proposed new standards are appropriate to the proposed type of development.

Sec. 2.10.3 Submittal requirements.

A. Waiver request application forms shall be submitted to the Office of the County Engineer.

B. A fee in the amount established by resolution of the Board shall accompany the application. The fee schedule is available at the Office of the County Engineer.

C. The applicant shall submit the following:

(1) The waiver request form including citing the section of the Land Development Code and stating the reason, hardship, and justification for each waiver requested.

(2) A Conceptual Plan, at minimum, depicting what currently exists and what is being proposed on the property.

(3) A color aerial photo with the property contemplated for development outlined.

Sec. 2.10.4 Review and approval procedures.

DRC shall review this application with staff comments and approve, approve with conditions, or provide further direction to the applicant.

Sec. 2.10.5 Completion and close out.

Waivers shall be listed on the cover sheet of the applicable plans with approval dates and conditions, if any. Approved waivers are valid only for the application submitted, the type of development being proposed, and related applications.

Division 11 Application Requirements

Sec. 2.11.1 Application Requirements. Table 2.11.1 -1, Application Requirements, provides a reference of the minimal requirements needed for:

- A comparable review, and/or
- Information that may be required to move the application efficiently through the approval process.

Requirements in this table may be cumulative to and/or dependent on other aspects of the application.

Application Technical Standards and Requirements are provided in Article 6 of this Code.

Table 2.11.1-1 Application Requirements

			Application Types							
	Application Requirements	**Reference**	**Concept**	**Master Plan**	**Mass Grading Plan**	**Preliminary Plat**	**Improvement Plan**	**Final Plat**	**Minor Site Plan**	**Major Site Plan**
General	Applicant, Owner, Manager Information	2.12.1	X	X	X	X	X	X	X	X
	Electronic plan submittal	2.12.2	X	X	X	X	X	X	X	X
	Title block	2.12.3		X	X	X	X		X	X
	Front page requirements	2.12.4		X	X	X	X			X
	Concurrency	2.12.5		X		X	X	X	X	X
	DOH Information	2.12.6		X		X	X		X	X
	Digital file	2.12.7	X	X	X	X	X	X		X
Existing	Boundary and Topographic Survey	2.12.8		X	X	X	X			X
	Streets and rights-of-ways	2.12.9	X	X	X	X	X	X	X	X
	Easements	2.12.10	X	X	X	X	X	X	X	X
	Location map	2.12.4.G	X	X	X	X	X	X		X
	Aerial map	2.12.11	X	X	X	X	X			X
	FIRM or FIRMette	2.12.12	X	X	X	X	X			X
	NRCS Soil Survey	2.12.13		X	X	X	X			X

	Application Requirements	Reference	Concept	Master Plan	Mass Grading Plan	Preliminary Plat	Improvement Plan	Final Plat	Minor Site Plan	Major Site Plan
Existing	USGS Quad	2.12.14		X	X	X	X			X
	National Wetland Inventory	2.12.15		X	X	X	X			X
	Environmental Assessment	2.12.16		X	X	X	X		X	X
	Karst and Geologic Assessment	2.12.17		X	X	X	X		X	X
	Trees	2.12.18	X	X	X	X	X		X	X
	Existing site improvements	2.12.19	X	X	X	X	X		X	X
Proposed	Proposed site improvements	2.12.19	X	X	X	X	X		X	X
	Phases of development	2.12.20	X	X	X	X	X			X
	Proposed Land Uses	2.12.21		X	X	X	X	X	X	X
	Streets and rights-of-ways	2.12.9	X	X	X	X	X	X	X	X
	Proposed lot/tract/ parcel	2.12.22				X	X	X	X	X
	Lot typicals	2.12.23		X		X	X		X	X
	Buffers	2.12.24	X	X	X	X	X	X	X	X
	MFLA	2.12.25		X	X		X	X		X
	Landscaping	2.12.26					X		X	X
	Outside storage areas	2.12.27	X	X			X		X	X
	Road identification	2.12.28	X	X	X	X	X	X	X	X
	Traffic Impact Analysis	2.12.29		X		X			X	X
	Route plan	2.12.30		X	X		X		X	X
	Erosion control	2.12.31			X		X		X	X

Proposed	Application Requirements	Reference	Concept	Master Plan	Mass Grading Plan	Preliminary Plat	Improvement Plan	Final Plat	Minor Site Plan	Major Site Plan
	Drainage analysis and natural features	2.12.32		X	X	X	X		X	X
	Stormwater Calculations and Geotechnical Data	2.12.33			X		X			X
	Water/sewer capacity	2.12.34		X		X	X		X	X
	Water/sewer services	2.12.35		X		X	X	X	X	X
	Water/sewer system locations	2.12.36		X		X	X		X	X
	Water/sewer hydraulic modeling	2.12.37					X			X
	Maintenance/ Management Statement	2.12.38		X	X	X	X	X		X
	BMP Documents	2.12.39			X		X			X

Division 12 Application reference. The following requirements are referenced as applicable in Table 2.11.1-1 above.

Sec. 2.12.1 Applicant information shall be provided on application forms found at the Office of the County Engineer.

Sec. 2.12.2 Digital submission of plans (optional) shall be coordinated through the Office of the County Engineer and available through www.marioncountyfl.org/eplans.

Sec. 2.12.3 Title block shall be shown on all sheets denoting type of application; project name, location, county, and state; and date of original and all revisions.

Sec. 2.12.4 Front page of the plan shall minimally include:

A. Type of application;

B. Project name centered at top of page;

C. Name, address, phone number, and signature of the owner and applicant (these signatures are not required until the final submittal);

D. Signed certification by the owner as follows: I hereby certify that I, my successors, and assigns shall perpetually maintain the improvements as shown on this plan (this signature is not required until the final submittal);

E. Name, address, and phone number of the licensed professional;

F. Each licensed professional is responsible for information shown within their particular field of practice and shall sign and seal, as applicable, as follows:

(1) Licensed Design Professional Certification: I hereby certify that these plans and calculations were completed in accordance with all applicable requirements of the Marion County Land Development Code (LDC), except as waived;

(2) Surveyor and Mapper Certification: I hereby certify that the survey represented hereon is in accordance with all applicable requirements of the LDC and meets the minimum technical standards as set forth by the Florida Board of Professional Surveyors and Mappers;

G. A key location or vicinity map, with north arrow, at a scale suitable to show the location of the development with reference to surrounding properties, streets, municipal boundaries, sections, range, and township;

H. A portrait oriented minimal 3 inches x 5 inches space, located 2-3/4 inches from the right edge of paper and 3/4 inches from the top edge of paper, shall remain blank to allow for a County approval stamp;

I. Index of sheets;

J. List of utility providers;

K. List of approved waivers, their conditions, and the date of approval;

L. Data block. The items below are required and shall be listed in order as shown. If an item does not apply, it shall be clearly indicated as not applicable.

(1) Parcel identification number;

(2) Land use designation;

(3) List of Development Agreements including Marion County Official Record Book and Page;

(4) Zoning information:

(a) Zoning classification.

(b) List of approved variances, their conditions, and the date of approval.

(c) Special Use Permit case number and resolution.

(d) Zoning requirements including lot area, width, setbacks, and building height.

(5) Overlay zones;

(6) Gross site acreage of all initial and anticipated parcels, and if different, the acreage of the development area, to the nearest hundredth of an acre;

(7) Existing and proposed uses;

(8) Existing and proposed building height;

(9) Listing of site coverage (in square footage, acreage and percentage):

(a) Existing and proposed building coverage by intended use with gross floor area and leasable/interior area;

(b) Existing and proposed gross impervious area;

(c) Proposed gross non-residential floor area ratio or residential density;

(d) Existing and proposed natural open space, improved open space, open water, and wetlands;

(e) Existing and proposed preserved natural areas;

(10) Number of required and provided parking spaces;

(11) Projected daily trip generation and a.m./p.m. peak hour traffic volume; and

(12) Proposed miles of road, number of lots, blocks and tracts, as applicable.

Sec. 2.12.5 Project Concurrency information shall be provided per Article 1.8.

Sec. 2.12.6 Provide location of septic systems and wells for Department of Health review.

Sec. 2.12.7 A digital version of the plan in a format pre-approved by the Office of the County Engineer.

Sec. 2.12.8 Current boundary and topographic survey (one foot contour intervals extending 100 feet beyond the project boundary) based upon accepted vertical datum. Surveys will be less than 12 months old and accurately reflect current site conditions, meeting standards set forth in FAC 5J-17. Alternate topographic data may be accepted if pre-approved by the Marion County Land Surveyor.

Sec. 2.12.9 Provide location and dimensions of any existing, proposed, and adjacent streets, including all rights-of-way serving the project.

Sec. 2.12.10 Show any known existing or proposed easement or land reservation.

Sec. 2.12.11 An aerial map of the site with a layout of the development.

Sec. 2.12.12 A copy of the FIRM or FIRMette with project boundary outlined.

Sec. 2.12.13 A copy of the NRCS Soil Survey with project boundary outlined, and a summary description of the associated soils.

Sec. 2.12.14 A copy of the USGS Quadrangle map showing the contributing watershed and with project boundary outlined.

Sec. 2.12.15 A copy of a National Wetland Inventory map with project boundary outlined.

Sec. 2.12.16 An Environmental Assessment for listed species and vegetative communities.

Sec. 2.12.17 Karst feature and geologic assessment, including any other pertinent characteristics, on the project site and offsite within 200 feet of the project boundary.

Sec. 2.12.18 All trees 10 inches DBH and larger and groups of trees. Location of smaller diameter trees may be required depending on habitat and species.

Sec. 2.12.19 Provide dimensions and location of all existing site improvements; dimensions and location for all proposed site improvements with all setbacks dimensioned; and location and size of existing cross drains.

Sec. 2.12.20 Show all phases of development. Improvements must be in place to support each phase of development at time of phase completion.

Sec. 2.12.21 Listing of land uses giving general purpose of and character of the proposed development, acreage, of open space, Marion Friendly Landscape Areas, parks, recreation areas and natural areas to be retained.

Sec. 2.12.22 Show all proposed lot, tract and/or parcel lines with dimensions and area in square feet.

Sec. 2.12.23 Show building lot typicals including setback requirements for all proposed improvements and accessory uses i.e. screen rooms, pools, screen cages, patios, decks, etc.

Sec. 2.12.24 Show location and dimensions of required land use buffering.

Sec. 2.12.25 Indicate the locations of all required Marion Friendly Landscape Areas (MFLA). For Master Plan, a statement which acknowledges that MFLA will be included in future submittals may satisfy this requirement.

Sec. 2.12.26 Show all required landscaping.

Sec. 2.12.27 Show common outside storage areas.

Sec. 2.12.28 All roads shall be identified by quadrant number as assigned by Marion County 911

Management.

Sec. 2.12.29 A Traffic Impact Analysis shall be provided which is based on the estimated trip generation of the proposed development. The study level of the analysis shall comply with the County Traffic Impact Analysis Guidelines available at the Office of the County Engineer.

Sec. 2.12.30 Show construction entrance and provide a route plan.

Sec. 2.12.31 Demonstrate erosion and sedimentation control.

Sec. 2.12.32 Provide site analysis map depicting existing and proposed drainage basins and drainage features including the existing one percent (100-year) flood plain as shown on FEMA maps with zone elevation and vertical datum noted; water line of lakes, wetlands, rivers, streams and canals; and other manmade or natural features. A note shall be provided detailing source and survey field methods used to obtain and verify data field methods of delineation of all lines shown.

Sec. 2.12.33 Stormwater calculations and supporting documentation including geotechnical reports/studies.

Sec. 2.12.34 Evidence that adequate capacity is available in the water and sewer systems that will be servicing the project.

Sec. 2.12.35 A statement shall be on the plan indicating how water, sewer, and fire flow services shall be provided to all lots.

Sec. 2.12.36 Location of water supply system and sewage collection, treatment, and disposal system.

Sec. 2.12.37 Hydraulic modeling of the pertinent portions of the water and sewer systems that will be servicing the project.

Sec. 2.12.38 Statement identifying legal body responsible for maintenance and management of common areas and improvements.

Sec. 2.12.39 Best Management Practices documents.

Division 13 Conceptual Plan

Sec. 2.13.1 Applicability.

A. Conceptual Plans are required for PUD rezoning and SUP applications. Should applicant elect to submit a Master Plan for a PUD rezoning application, then a Conceptual Plan submittal is not required.

B. Conceptual Plans may be used to support pre-application meetings and other development applications.

Sec. 2.13.2 Submittal requirements.

A. Conceptual Plans for PUD rezoning or other development applications shall be submitted to the Office of the County Engineer. Conceptual Plans for SUPs shall be submitted to the Growth Services Department.

B. A fee in the amount established by resolution of the Board shall accompany the application. The fee schedule is available at the Office of the County Engineer.

C. A conceptual layout of the project.

D. Any special details for which the applicant is seeking input from the County.

E. If a Conceptual Plan is required for PUD rezoning and SUP applications, refer to those applications for additional submittal requirements, such as setbacks and other zoning details.

F. Technical requirements for Conceptual Plan submittals are found in Article 6.2.

Sec. 2.13.3 Review and approval procedures.

A. Conceptual Plans required for PUD rezoning applications shall be reviewed by the Development Review Committee (DRC) for the details shown including access, setbacks, layout, density, public infrastructure and available services or further direction shall be provided, including direction to resubmit. Prior to commencing the PUD rezoning process, DRC's review of the Conceptual Plan shall be completed with a recommendation of approval, approval with conditions, or denial forwarded to the Planning and Zoning Commission (P&Z)and the Board. Final approval by DRC shall be held pending the outcome of the PUD rezoning application. The Board will approve or deny these Conceptual Plans and any amendments determined to be significant by DRC.

B. Conceptual Plans required for SUP applications shall adhere to the SUP review and approval process found in Article 2.X.

C. All other Conceptual Plans shall be reviewed by DRC for the details shown including access, setbacks, layout, density, public infrastructure and available services. These Conceptual Plans shall be reviewed by staff and a decision rendered by DRC within 10 working days from the submittal deadline.

Sec. 2.13.4 Completion and close out.

A. Conceptual Plans for PUD rezoning and SUP applications shall be valid consistent with their approvals by the Board.

B. Conceptual Plans used to support pre-application meetings and other development applications shall be valid for five years.

Division 14 Master Plan

Sec. 2.14.1 Applicability.

A. Master Plans shall be submitted for multi-phase development projects unless specified otherwise herein.

B. Preliminary Plats that show the phasing for a development project can be used in lieu of a Master Plan.

C. Master Plans submitted in lieu of Conceptual Plans for PUD rezoning applications, shall follow the procedures outlined under Conceptual Plans.

Sec. 2.14.2 Submittal requirements.

A. Master Plan applications shall be submitted to the Office of the County Engineer.

B. A fee in the amount established by resolution of the Board shall accompany the application. The fee schedule is available at the Office of the County Engineer.

C. Digital submission of plans shall be coordinated through the Office of the County Engineer and available through www.marioncountyfl.org/eplans.

D. For paper submissions, the number of copies submitted shall be established by resolution.

E. Development Review Plan Application available at the Office of the County Engineer.

F. General Application Requirements shall be as shown on Table 2.9-1 General Application Requirements.

G. Temporary construction roads may be exempted from the traffic study with approval by the Traffic Engineer.

Sec. 2.14.3 Review and approval procedures.

A. DRC shall review Master Plans, other than those submitted for PUD rezoning applications, with staff

comments and approve, approve with conditions, or provide further direction to the applicant.

B. Master Plans submitted in lieu of Conceptual Plans for PUD rezoning applications shall be reviewed by DRC and a recommendation of approval, approval with conditions, or denial forwarded to the P&Z and the Board. Final approval by DRC shall be held pending the outcome of the PUD rezoning application. The Board will approve or deny these Master Plans and any amendments determined to be significant by DRC.

C. One approved plan shall be returned to the applicant.

Sec. 2.14.4 Completion and close out.

Master Plans shall be valid for five years with a one-time extension of two years if requested by the applicant in writing and approved by DRC.

Division 15 Mass Grading Plan

Sec. 2.15.1 Applicability.

Mass Grading Plans are not required, but may be submitted for review and approval at the option of the applicant prior to the submittal and approval of a Major Site Plan or Improvement Plan when clearing, earth moving, excavation or grading the site or portions of the site are intended, including temporary or permanent construction of the stormwater ponds, swales, ditches or piping, prior to the construction of other improvements. When submitting a Mass Grading Plan, the applicant shall adhere to the minimum standards and submittal requirements of the intended future Major Site Plan or Improvement Plan application.

Sec. 2.15.2 Submittal requirements.

A. Mass Grading Plan applications shall be submitted to the Office of the County Engineer.

B. A fee in the amount established by resolution of the Board shall accompany the application. The fee schedule is available at the Office of the County Engineer.

C. Digital submission of plans shall be coordinated through the Office of the County Engineer and available through www.marioncountyfl.org/eplans.

D. For paper submissions, the number of copies submitted shall be established by resolution.

E. Development Review Plan Application available at the Office of the County Engineer.

F. General Application Requirements shall be as shown on Table 2.9-1 General Application Requirements.

Sec. 2.15.3 Review and approval procedures.

A. DRC shall review this application with staff comments and approve, approve with conditions, or provide further direction to the applicant.

B. One approved plan shall be returned to the applicant.

C. Permitting by other agencies. Any waivers, exemptions or partial exemptions granted by Marion County do not exempt the applicant from obtaining the appropriate permits from other agencies as applicable.

Sec. 2.15.4 Construction, completion, and close out.

A. Mass Grading Plans shall be valid for two years with a one-time extension of one year if requested by the applicant in writing and approved by DRC. Should activities associated with the Mass Grading Plan cease for 30 days, the applicant shall immediately stabilize the site and ensure that adjacent offsite properties are not adversely impacted.

B. Applicant shall notify Office of the County Engineer for onsite improvement work 72 hours prior to commencing construction.

C. All work shall be in accordance with approved plans.

D. As-Builts/Record Survey meeting standards set forth in FAC 5J-17 shall be submitted with the engineer's certification for final inspection. After all work is completed, inspected, and accepted by the County, a letter of completion will be issued to the applicant. As-Builts shall adhere to the requirements of the Major Site Plan or Improvement Plan which the Mass Grading Plan supports.

Division 16 Division of Land

Sec. 2.16.1 Applicability.

A. General. All divisions of land into three or more lots, parcels, tracts, tiers, blocks, sites, units, or any other division of land shall be platted in accordance with applicable provisions of Ch. 177 FS and Divisions 13 and 15 of this Article, unless otherwise identified as an exception in Section 2.16.1.B below.

B. Excepted Divisions of Land:

(1) A parent tract may be subdivided one time only into one additional tract, provided that the tract created and the remaining parent tract are in compliance with all applicable dimensional requirements and meet driveway spacing. Minimum access onto a road or street shall be 40 feet wide, meet driveway spacing requirements and may be provided by recorded deed or recorded exclusive easement. Any further division of the resulting parcels shall be platted in accordance with Ch. 177 FS and this Code, as of the adoption date.

(2) Creation of equal or larger parcels or lots of record:

(a) The combination of all or a portion of previously created parcels of record where the newly created or residual parcels are consistent with the Comprehensive Plan and comply with all applicable zoning district dimensional criteria or, where applicable, the regulations governing non-conformities.

(b) The combination of all or a portion of previously platted parcels of record are exempt where none of the newly created or residual parcels contain less area than the original parcels of record being combined and no streets of any kind or public right-of-way easements are created, changed or extinguished. The minimum lot dimensional criteria of the zoning code must be met.

(3) Boundary adjustments. Any conveyance between adjoining landowners if:

(a) The purpose of the conveyance is to adjust or settle the common boundary line between adjoining landowners; and

(b) The deed of conveyance or other legal instrument is recorded in the official records of Marion County; and

(c) The resulting parcel(s) conform to the applicable zoning district dimensional criteria and are consistent with the Marion County Comprehensive Plan.

(4) Conveyance to government. Any division of land for the purpose of conveying land to any federal, state or local government entity or agency or public utility, provided such conveyance is accepted by the grantee by an instrument recorded in the public records of Marion County.

(5) Division by order of court. Any division of land by order of a court of competent jurisdiction. Implementation of the division shall require compliance with the procedures of this section. Any action which would circumvent or otherwise avoid the purposes or provisions of this section, i.e. the subdivision regulations will not be considered conforming unless a waiver from these provisions is granted.

(6) Corrective instrument. Any conveyance for the purpose of correcting an error made in the language used in an original conveyance.

(7) Platting of a portion of a tract. Platting of a portion of a parcel or tract under the terms and procedures of this section shall not constitute a division of that parcel or tract.

(8) Agricultural lot splits outside of the Urban Growth Boundary:

(a) Number of lots created under this section is limited to ten.

(b) Each proposed lot shall be a minimum of 10 acres with at least one acre of contiguous land wholly above the one percent (100-year) flood plain or wetland.

(c) Each proposed lot shall have a rural agricultural zoning.

(d) Any lot abutting a publicly maintained and/or dedicated road that does not conform to the right-of-way width necessary to meet the minimum design standards shall dedicate necessary right-of-way or easement based upon criteria set forth in Article 6.

(e) Each lot shall front on a paved private road or an easement and shall meet the minimum driveway spacing requirements established in this Code.

(f) If an easement is utilized the following requirements shall apply:

1. Easements created under this subsection shall not exceed 2,640 feet in total length.
2. The easement shall be a private, non-exclusive easement for ingress and egress, allowing public use for emergency, utility and drainage purposes.
3. Connect to a publicly maintained road meeting driveway spacing requirements. The easement shall be paved a minimum of 20 feet beyond the public right-of-way.
4. Have a minimum width of 60 feet.
5. Not obligate the County to maintain the easement.
6. Have road name and other traffic signs installed in accordance with applicable County regulations.
7. Flag lots are prohibited.
8. Stabilized turnarounds shall be provided at a maximum spacing of 1,500 feet and at any termination.

(g) A County MSBU shall be established for the maintenance of the improvements created by this division prior to final approval and recordation. A waiver to this provision may only be granted by the Board upon review and recommendation by the DRC.

(9) Ten acre tracts in the Rural Lands. Any division of land where all parcels resulting from the division contain ten acres of land or more, all parcels have 660 feet of frontage on a paved road maintained by a public entity that is not designated as an arterial roadway, shall meet minimum driveway spacing requirements and no public easements or streets are created.

(10) Family Division. A parcel of record as of January 1, 1992 that is located in the Rural Land may be subdivided for use of immediate family members for their primary residences, provided that the tract divided and the remaining parent tract are at least one acre in size. In the Urban Area only parcels of record as of January 1, 1992 which are low density residential property exceeding two acres in size may be divided for the use of immediate family members for their primary residences up to the maximum density of one dwelling unit per gross acre. Immediate family is defined as grandparent, parent, step-parent, adopted parent, sibling, child, step-child, adopted child, or grandchild. A parcel of record shall not be allowed to be divided more than three times as a family division. Minimum access onto a road or street shall be 40 feet in width and shall be provided by recorded deed or by recorded non-exclusive easement. No subdivision to the same family member more than once every five years shall be permitted. Any subdividing of a parcel of record for the purpose of family division shall follow the waiver request process.

Sec. 2.16.2 Submittal requirements.

A. Applicants requesting approval of division of land excepted from platting requirements above, with the exception of family divisions and agricultural lot splits, shall submit a request to the Planning/Zoning Manager along with a sketch depicting the division.

B. Applicants requesting an agricultural lot split shall submit a DRC waiver request form including a sketch demonstrating that the proposed division meets all the requirements above.

C. Applicants requesting a family division shall request from the Planning/Zoning Manager, on a DRC Waiver Request form provided by the Growth Services Department, an eligibility determination for such division and shall demonstrate that the proposed division is for a qualified family member. A DRC waiver request form including the affirmative eligibility determination and other submittal requirements of Sec 2.8.2 shall be submitted to the Office of the County Engineer for DRC review.

Sec. 2.16.3 Review and approval procedures.

A. Applications seeking approval of division of land excepted from platting requirements above, with the exception of family divisions and agricultural lot splits, shall be reviewed by the Growth Services Department for compliance with this section.

B. Family divisions and agricultural lot splits shall be reviewed through the DRC review process.

Sec. 2.16.4 Completion and closeout.

A. For applications seeking approval of division of land excepted from platting requirements above, with the exception of family divisions and agricultural lot splits, the Planning/Zoning Manager shall issue a letter of approval or denial along with a reason for such denial. An approval letter will include authorization for the division of land and the land may then be conveyed and/or improved.

B. Parcels created through agricultural lot splits, ten acre tracts in rural lands, or family divisions shall be monumented and shown on the required boundary survey along with the individual legal descriptions.

C. Agricultural lot splits. Prior to DRC approval, in addition to other requirements, the following shall be required:

(1) Legal descriptions, acreage and square footage of the original and proposed lots together with the legal description of any existing or proposed easements shall be shown on a boundary survey prepared by a professional surveyor and mapper registered in the State of Florida. The survey must show all structures, easements, surface water bodies, the one percent (100-year) flood plain with base elevation, wetland and amount of acreage inside and outside of the flood plain and/or wetland.

(2) Title opinion of an attorney licensed in Florida or a certificate by a licensed title company dated through the date of final approval, showing all persons or entities with an interest of record in the property, including but not limited to, the record fee owners, easement holders, and mortgage and lien holders. The report shall include the tax identification number(s) for the property and copies of all documents such as vesting deeds, existing mortgages and any other documents evidencing an interest in the property which are referenced in the title opinion.

(3) Upon approval of the agricultural lot split, at the applicant's expense, the applicant shall record the maps and documents, in the public records of Marion County, Florida and provide appropriate copies to the Office of the County Engineer.

D. Family divisions.

(1) If approved, the family members shall complete a Family Division Affidavit confirming the intent of the division for an immediate family members' primary residence. The Family Division Affidavit form is available from the Growth Services Department. The affidavit must be signed and notarized by all involved parties.

(2) The Family Division Affidavit, boundary survey including location of interior improvements and

copy of recorded deed transferring ownership of the property shall be provided to the Growth Services Department. The Family Division will expire two years after DRC approval unless execution of the Family Division Affidavit and property transfer has occurred.

Division 17 Preliminary Plat

Sec. 2.17.1 Applicability.

Preliminary Plats shall be submitted for each development where platting is required in this Code or by Florida Statute.

Sec. 2.17.2 Submittal requirements.

A. Preliminary Plat applications shall be submitted to the Office of the County Engineer.

B. A fee in the amount established by resolution of the Board shall accompany the application. The fee schedule is available at the Office of the County Engineer.

C. Digital submission of plans shall be coordinated through the Office of the County Engineer and available through www.marioncountyfl.org/eplans.

D. For paper submissions, the number of copies submitted shall be established by resolution.

E. Development Review Plan Application available at the Office of the County Engineer.

F. General Application Requirements shall be as shown on Table 2.9-1 General Application Requirements.

G. Verification that a copy of the Preliminary Plat was provided to each municipality within one mile of the project.

H. Verification that a copy of the Preliminary Plat was provided to each utility servicing the project for the purpose of determining the location, size, and configuration of utility easements needed for installation and maintenance. All utility easement requirements shall be resolved before approval of Improvement Plans.

I. Show bearings, distances, curve data, length of tangents, radii, arcs, chords and central angles for all rights-of-way, and centerline curves on streets. .

Sec. 2.17.3 Review and approval procedures.

A. The DRC shall review this application with staff comments and approve, approve with conditions, or provide further direction to the applicant.

B. One approved plan shall be returned to the applicant.

Sec. 2.17.4 Completion and close out.

Preliminary Plats shall be valid for five years with a one-time extension of one year if requested by the applicant in writing and approved by DRC.

Division 18 Improvement Plan

Sec. 2.18.1 Applicability.

Improvement Plans shall be submitted for construction, including but not limited to public or private roads, road modifications, traffic signal installations/modifications, offsite road improvements, and other offsite linear type construction such as utility and stormwater installations. All public or private road improvements shall comply with this Code. Offsite improvements and traffic signal installations/modifications shall be submitted as a separate application.

Sec. 2.18.2 Submittal requirements.

A. Improvement Plan applications shall be submitted to the Office of the County Engineer.

B. A fee in the amount established by resolution of the Board shall accompany the application. The fee schedule is available at the Office of the County Engineer.

C. Digital submission of plans shall be coordinated through the Office of the County Engineer and available through www.marioncountyfl.org/eplans.

D. For paper submissions, the number of copies submitted shall be established by resolution.

E. Development Review Plan Application available at the Office of the County Engineer.

F. General Application Requirements shall be as shown on Table 2.9 – 1 General Application Requirements.

G. Easement requirements of each utility shall be indicated by the utility on a copy of the Preliminary Plat or by letter.

H. A copy of the vertical and horizontal control notes shall be submitted to the Office of the County Engineer for review.

I. Show connections to other phases.

J. Show buffering and landscaping.

K. The improvement plans shall show all required improvements proposed to be constructed including all public and private utilities.

L. The data block on the front page of the plan shall also include the design speed, functional classification, and roads status whether private or public.

Sec. 2.18.3 Review and approval procedures.

A. An inspection fee based on the miles of roadway to be inspected shall be paid prior to plan approval. The fee shall be the amount established by resolution of the Board. The fee schedule is available at the Office of the County Engineer.

B. The County Engineer shall review this application with staff comments and approve, approve with conditions, or provide further direction to the applicant.

C. For public road subdivisions, notice of compliance or exemption from the water management district regulations must be received prior to commencement of construction.

D. Permitting by other agencies. Any waivers, exemptions or partial exemptions granted by Marion County do not exempt the applicant from obtaining the appropriate permits from other agencies as applicable.

E. A construction permit shall be issued by the Office of the County Engineer at the time of plan approval or prior to commencing construction in the case of offsite improvements.

F. One approved plan shall be returned to the applicant.

Sec. 2.18.4 Construction, completion, and close out.

A. Improvement Plans shall be valid for five years with a one-time extension of two years if requested by the applicant in writing and approved by DRC.

B. Pre-Construction Conference.

(1) A pre-construction conference shall be scheduled by the Office of the County Engineer for offsite improvements.

(2) Maintenance of Traffic plans for offsite improvements and signal installation shall be submitted at the pre-construction conference to be approved by the County Engineer.

(3) Applicant shall notify the Office of the County Engineer of onsite improvement work 72 hours prior to commencing construction.

C. All subdivision improvements shall be constructed in accordance with approved plans and shall conform to regulations and specifications in effect on the date of approval of the improvement

plans.

D. If improvements are not completed, an Improvement Agreement containing the estimate of cost of remaining subdivision improvements as shown on the approved Improvement Plans shall be provided. The Improvement Agreement form is available at the Office of the County Engineer. A security, limited to an irrevocable letter of credit or bond only, shall be provided in the amount of 120 percent of the estimated cost of remaining improvements as well as a partial As-Built/Record Survey. The Improvement Agreement shall be approved by the Board.

E. If an applicant desires to construct a limited number of model homes, or similar type features, prior to the Final Plat being recorded, an indemnification agreement shall be provided subject to:

(1) Approval of the Preliminary Plat and Improvement Plans;

(2) The development being served by a central sewer and central water system;

(3) The Final Plat has been submitted for review including cost estimate with appropriate assurance for subdivision improvements if incomplete;

(4) No more than 10 percent of the total number of building lots, not to exceed 50 building permits; and

(5) Approval by the BCC.

F. As-Built Submittal.

(1) Two sets of As-Built/Record Survey signed and sealed by a Florida Licensed Professional Surveyor and Mapper meeting standards set forth in FAC 5J-17 shall be submitted prior to final inspection along with a digital version of the survey in a format pre-approved by the Office of the County Engineer.

(2) Inspection and material testing of all improvements shall be submitted in one report with the As-Built/Record Survey.

(3) Certification of Final Completion. When all required improvements have been constructed, the applicant shall so advise the Office of the County Engineer and submit a request for final inspection with a certification of final completion. The certification form is available at the Office of the County Engineer. After all work is completed, inspected, and accepted by the County, a letter of completion will be issued to the applicant.

G. For public road subdivisions, the applicant is required to provide for the inspection of the surface water management system by a Florida Registered Professional Engineer to assure that the system is properly constructed and maintained. The inspection shall occur within 30 days of project completion. The County shall be copied on all inspection reports required by the governing Water Management District permit for operation and maintenance.

H. For public road subdivisions, a maintenance agreement with a security limited to an irrevocable letter of credit or bond only in the amount of twenty percent of the original construction cost of subdivision improvements shown on the approved Improvement Plans. The maintenance agreement form is available at the Office of the County Engineer. Subdivision improvements shall be maintained by the Developer for a minimum period of two years from the date of construction completion acknowledged by the Office of the County Engineer and 60 percent occupancy. The letter of credit or bond shall be released upon acceptance of the constructed improvements for maintenance by the County.

I. For public road subdivisions, the applicant shall complete the transfer of ownership documentation with the governing Water Management District including payment of any required Water Management District fees, upon review and approval by the County.

J. For private road subdivisions, documentation shall be submitted as to maintenance responsibilities and the name of the entity responsible for such maintenance with the appropriate legal documents.

Division 19 Final Plat

Sec. 2.19.1 Applicability.

The Final Plat shall be submitted for approval and recording in the public records of Marion County for each development where platting is required by this Code and shall comply with Ch. 177 FS. All subdivision improvements shall be dedicated private unless otherwise approved by DRC or required by this Code.

Sec. 2.19.2 Submittal requirements.

A. Final Plat applications shall be submitted to the Office of the County Engineer.

B. A fee in the amount established by resolution of the Board shall accompany the application. The fee schedule is available at the Office of the County Engineer.

C. Digital submission of plans shall be coordinated through the Office of the County Engineer and available through www.marioncountyfl.org/eplans.

D. For paper submissions, the number of copies submitted shall be established by resolution.

E. Development Review Plan Application available at the Office of the County Engineer.

F. General Application Requirements shall be as shown on Table 2.9-1 General Application Requirements.

G. Title Certification. All Final Plats submitted to Marion County shall be accompanied by a title opinion, no more than 30 days old, of an attorney, licensed in Florida, or a certification by an abstractor or title company certifying the record title owner of the lands as described and shown on the plat.

H. Legal documents such as Declaration of Covenants and Restrictions, By-Laws, Articles of Incorporation, ordinances, resolutions, etc.

I. Copy of control field notes and/or GPS observation and reduction information in a digital version in a format pre-approved by the Office of the County Engineer or hard copy form with closure report showing adjustment to Florida State Plane Coordinate System.

J. A signed and sealed letter of intent, by the platting surveyor, will be submitted to the Office of the County Engineer prior to the final approval of the plat. This letter of intent will detail the setting of the PCPs and lot corners after recording and/or indicate that the setting of the monumentation has been guaranteed by bond/surety in accordance with § 177.091 FS.

K. Copies of the current Certified Corner Record as submitted to the State of Florida by the signing surveyor and mapper, referencing any section corner shown or referenced by the plat shall be submitted to the County Surveyor prior to plat approval.

Sec. 2.19.3 Review and approval procedures.

A. An executed mylar (24 inches × 36 inches, 2 mil. thickness) and digital version of the plat, in a format pre-approved by the Office of the County Engineer, shall be submitted for use during review and approval by the Development Review Committee.

B. If there are internal roads within the development, an additional digital version of the plat shall be provided in a format pre-approved by 9-1-1 Management for the purpose of maintaining the street centerline file.

C. Upon approval by review staff, the executed mylar shall be signed by the County Surveyor and the Development Review Committee.

D. DRC's approval shall be presented to the Board for final action. The Board's approval shall expire 90 calendar days from the date such approval was granted, unless within such period the plat is duly recorded in the public records of Marion County. The Board may extend this date.

E. Upon approval by the Board, the signed plat shall be returned to the Office of the County Engineer

for recording.

Sec. 2.19.4 Completion and close out.

A. The Final Plat cannot be approved and recorded until all improvements are completed and accepted, or an improvement agreement has been approved by the Board.

B. The Final Plat cannot be recorded until the appropriate fees for recording of the plat and all accompanying documents have been submitted to the Office of the County Engineer.

C. No Final Plat shall be accepted for filing by the Clerk of the Circuit Court until it has been approved by the Board as indicated on the plat by the signatures of the Chair and Clerk, and a Municipal Service Benefit Unit (MSBU), Community Development District (CDD), or other special district for the purposes of maintaining the improvements for this plat has been established.

D. After the Final Plat has been recorded, the Clerk of the Circuit Court will release the original plat to a printing company of the Developer's choice. The printing company shall, at the Developer's expense, furnish and deliver two mylar (2 mil. thickness) prints and five paper prints (to include two 24 inches × 36 inches and three 11 inches × 17 inches) and one electronic file in 400dpi TIF Group 4 format on CD to the Clerk of the Circuit Court. All prints shall be of acceptable, recordable quality.

Division 20 Minor Site Plan

Sec. 2.20.1 Applicability.

A. When any of the Minor Site Plan thresholds are exceeded, a Major Site Plan is required.

B. A Minor Site Plan shall be submitted for review and approval prior to the issuance of a Building Permit or prior to the construction of site improvements when proposed improvements are in compliance with all of the following thresholds:

(1) Collectively, all existing and proposed impervious ground coverage does not exceed 35 percent of the gross site area or 9,000 square feet, whichever is less.

(2) The combined driveway trip generation is less than 50 peak hour vehicle trips.

(3) The project is not in the ESOZ or FPOZ and subject to the site plan requirements of Article 5.

(4) The site improvement does not increase flooding of adjacent property, or the concentration of stormwater discharge onto adjacent property.

C. The following do not require a Minor Site Plan submittal and shall proceed through the Building Permit process only, subject to a determination by MCUD, and shall not be subject to Article 8.2.5, except the parallel access requirement which will be determined on a case by case basis based on practicality by the Planning/Zoning Manager, 8.2.9, and 8.2.10 except tree preservation requirements which shall be adhered to:

(1) The development of interior alterations to an existing structure which does not result in additional paved parking or other impervious area to be provided.

(2) The development of or exterior alterations to a single-family residence, when existing and proposed improvements remains less than 35 percent of the gross site area or 9,000 square feet, whichever is less, or the design criteria of the approved and permitted subdivision.

(3) The development of exterior alterations to an existing, conforming improved site, with existing approved apron and driveway connection, other than a single-family residence which results in an increase in total impervious area which remains less than 35 percent of the gross site area or 9,000 square feet, whichever is less.

(4) For change of use or occupancy of a structure other than residential where the previous use and proposed use is a conforming uses.

(5) Special Event Permits, Temporary Use Permits and Home Occupation Permit.

(6) For development on agricultural lands, when collectively all existing and proposed impervious ground coverage does not exceed 35 percent of the gross site area or 9,000 square feet, whichever is less.

(7) Improvements related to bona fide agricultural uses that meet all of the following:

(a) Are on a parcel greater than or equal to ten acres.

(b) Are a minimum of 200 feet from all property lines.

(c) If collectively all existing and proposed surfaces are less than three percent of the gross site area and do not exceed 30,000 square feet of impervious ground coverage.

(d) Do not increase any offsite drainage.

(e) Do not contribute offsite drainage to a County documented drainage problem.

(8) For the construction of a sign.

Sec. 2.20.2 Submittal requirements.

A. Minor Site Plan applications shall be submitted to the Growth Services Department.

B. A fee in the amount established by resolution of the Board shall accompany the application. The fee schedule is available at the Office of the County Engineer.

C. Digital submission of plans shall be coordinated through the Office of the County Engineer and available through www.marioncountyfl.org/eplans.

D. For paper submissions, the number of copies submitted shall be established by resolution.

E. Development Review Plan Application available at the Office of the County Engineer.

F. General Application Requirements shall be as shown on Table 2.9-1 General Application Requirements.

Sec. 2.20.3 Review and approval procedures.

A. When Minor Site Plans are found to conform to the requirements of Article 6, Minimum Plan Requirements, the Minor Site Plan will be processed by the Growth Services Department.

B. The Office of the County Engineer shall route Minor Site Plans to the applicable County review staff.

C. The Planning/Zoning Manager shall review this application with staff comments and approve, approve with conditions, or provide further direction to the applicant.

D. Three sets of approved project plans shall be returned to the applicant.

E. Permitting by other agencies. Any waivers, exemptions or partial exemptions granted by Marion County do not exempt the applicant from obtaining the appropriate permits from other agencies as applicable.

Sec. 2.20.4 Completion and close out.

A. Building permit issuance, subsequent final inspection and Certificate of Occupancy, if applicable, shall constitute the completion of the Minor Site Plan and Building Permit Site Plan process.

B. The approval of the Minor Site Plan shall expire in two years or the duration of an unexpired building permit obtained within that time period

Division 21 Major Site Plan

Sec. 2.21.1 Applicability.

A. A Major Site Plan shall be submitted for review and approval prior to the issuance of a Building Permit or prior to the construction of site improvements when proposed improvements exceed any of the following thresholds:

(1) Collectively, all existing and proposed impervious ground coverage equals or exceeds 35 percent of the gross site area or 9,000 square feet.

(2) The combined driveway trip generation meets or exceeds 50 peak hour vehicle trips.

(3) A 24 inch diameter pipe, its equivalent, or larger is utilized to discharge stormwater runoff from the project area.

B. Offsite improvements related to a Major Site Plan shall be submitted as a separate Improvement Plan application.

C. Improvements which do not require a Major Site Plan but do result in an increase in flooding of adjacent property or concentration of stormwater discharge onto adjacent property shall only be subject to stormwater compliance as follows:

(1) Demonstrate to the Office of the County Engineer that proposed and existing development will not adversely affect public property and will not generate stormwater runoff in excess of pre-development runoff. Demonstration can be provided through sketches, pictures, site maps, etc. and can be confirmed through a scheduled and coordinated site visit.

(2) Provide erosion control. Temporary erosion control shall be provided as needed throughout construction and permanent erosion control shall be established prior to the project being considered successfully closed and completed by the County, including but not limited to the issuance of any Certificate of Occupancy associated with the property.

(3) Submit two copies of a finalized sketch which shows the existing improvements in the immediate vicinity, proposed improvements, stormwater controls and a statement that the owner understands and complies with required stormwater controls. Both copies shall bear the owner's original signature and date. Upon review and approval, one approved sketch shall be returned to the applicant.

D. Large parcels of property such as, but not limited to, farms, woodlands, commercial nurseries, or sod farms where existing and proposed impervious ground coverage equals or exceeds 35 percent of the gross site area or 9,000 square feet shall not be subject to submittal of a complete Major Site Plan but instead shall be subject to stormwater compliance as follows:

(1) Demonstrate to the Office of the County Engineer that proposed and existing development will not adversely affect adjacent property and will not generate stormwater runoff in excess of pre-development runoff. Demonstration can be provided through sketches, pictures, site maps, etc. and can be confirmed through a scheduled and coordinated site visit. Stormwater controls can be provided through a combination of natural retention areas with excess capacity and/or constructed stormwater systems.

(2) Provide erosion control. Temporary erosion control shall be provided as needed throughout construction and permanent erosion control shall be established prior to the project being considered successfully closed and completed by the County, including but not limited to the issuance of any Certificate of Occupancy associated with the property.

(3) Submit two copies of a finalized sketch which shows the existing improvements in the immediate vicinity, proposed improvements, stormwater controls and a statement that the owner understands and complies with required stormwater controls. Both copies shall bear the owner's original signature and date. Upon review and approval, one approved sketch shall be returned to

the applicant.

E. Improvements related to bona fide agricultural uses that meet all of the following conditions are exempt from the requirements of a Major Site Plan:

(1) Are on a parcel greater than or equal to ten acres.

(2) Are a minimum of 200 feet from all property lines.

(3) If collectively all existing and proposed surfaces are less than three percent of the gross site area and do not exceed 30,000 square feet of impervious ground coverage.

(4) Do not increase any offsite drainage.

(5) Do not contribute offsite drainage to a County documented drainage problem.

F. Exemptions or partial exemptions from a Major Site Plan do not make the applicant exempt from any other sections of this Code.

Sec. 2.21.2 Submittal requirements.

A. Major Site Plan applications shall be submitted to the Office of the County Engineer. Multi-phase Major Site Plans may include a separate sheet showing independent, stand alone phasing and shall not be subject to a separate Master Plan application.

B. A fee in the amount established by resolution of the Board shall accompany the application. The fee schedule is available at the Office of the County Engineer.

C. Digital submission of plans shall be coordinated through the Office of the County Engineer and available through www.marioncountyfl.org/eplans.

D. For paper submissions, the number of copies submitted shall be established by resolution.

E. Development Review Plan Application available at the Office of the County Engineer.

F. General Application Requirements shall be as shown on Table 2.9-1 General Application Requirements.

G. A copy of the vertical and horizontal control notes shall be submitted to the Office of the County Engineer for review.

Sec. 2.21.3 Review and approval procedures.

A. DRC shall review this application with staff comments and approve, approve with conditions, or provide further direction to the applicant.

B. One approved plan shall be returned to the applicant.

C. Upon approval by DRC, a Building Permit may be issued and such approval is authority for applicant to proceed with the site improvements shown on the approved Major Site Plan.

D. Permitting by other agencies. Any waivers, exemptions or partial exemptions granted by Marion County do not exempt the applicant from obtaining the appropriate permits from other agencies as applicable.

Sec. 2.21.4 Construction, completion, and close out.

A. Major Site Plans shall be valid for two years with a one-time extension of one year if requested in writing by the applicant and approved by DRC.

B. If connection to any stormwater facility which is public or will become public is proposed, the applicant is required to provide for the inspection of the surface water management system by a appropriately licensed design professional to assure that the system is properly constructed and maintained. The inspection shall occur within 30 days of project completion. The County shall be copied on all inspection reports required by the governing Water Management District permit for operation and maintenance.

C. The development of any improvements made pursuant to an approved Major Site Plan shall be inspected and approved by the Office of the County Engineer prior to the issuance of a Certificate of Occupancy.

D. The applicant shall notify the Office of the County Engineer for onsite improvement work 72 hours prior to commencing construction.

E. All improvements shall be constructed in accordance with approved plans.

F. As-Built Submittal.

(1) Two sets of As-Built/Record Survey signed and sealed by a Professional Surveyor and Mapper meeting standards set forth in FAC 5J-17 shall be submitted prior to final inspection along with a digital version of the survey in a format pre-approved by the Office of the County Engineer.

(2) Inspection and material testing of all improvements shall be submitted in one report with the As-Built/Record Survey.

G. Certification of Final Completion. When all required improvements have been constructed, the applicant shall so advise the Office of the County Engineer and submit a request for final inspection with a certification of final completion. The certification form is available at the Office of the County Engineer. After all work is completed, inspected, and accepted by the County, a letter of completion will be issued to the applicant.

H. Execute utility easement agreements prior to certification of final completion.

Division 22 Stand Alone Permits

Marion County Departments may implement an application for specific activities not covered elsewhere in this Code related to a development, implementation, or operation process addressing specific requirements of the Marion County Land Development Code, or to manage Marion County's participation in other state and regional agency procedures or operations. An application shall be obtained from the administering department.

Sec. 2.22.1 Right-of-Way Utilization.

A. Applicability.

(1) A Right-of-Way Utilization Permit is required for all construction, herbicide/pesticide spraying, tree clearing, and all temporary private use of public right-of-way.

(2) Exemptions. Permits are not required for routine maintenance, or minor alterations such as changes in communication cables, transformer capacity, wire size at secondary and primary circuits or adding wires to an existing circuit of a one mile segment or less of an existing permitted utility system without impacting traffic flow.

B. Submittal requirements.

(1) A permit application shall be submitted to the Office of the County Engineer before construction begins. The application can be obtained at the Office of the County Engineer.

(2) A fee in the amount established by resolution of the Board shall accompany the application. The fee schedule is available at the Office of the County Engineer.

(3) Two sets of project plans or a digital copy of the plan shall be submitted with the permit application.

C. Review and approval procedures.

(1) Once the plans have been approved and accepted and all required submittals have been obtained and processed, a Right-of-Way Utilization Permit will be issued.

(2) After the permit has been issued, a site inspection shall be scheduled by the applicant prior to the project start date.

D. Construction, completion, and close out.

(1) A notification of completion shall be submitted to the Office of the County Engineer so that a final inspection can be scheduled. At final completion, the right-of-way shall be restored to its original condition.

(2) An As-Built/Record Survey may be required as determined by the County Engineer.

Sec. 2.22.2 Driveway Connection.

A. Applicability.

A Driveway Connection Permit is required for any development or construction activity accessing County right-of-way. If the applicant is submitting through the Building Permit process, a separate application is not required.

B. Submittal requirements.

(1) A permit application shall be approved by the Office of the County Engineer before construction begins. The application can be obtained at the Office of the County Engineer.

(2) A fee in the amount established by resolution of the Board shall accompany the application. The fee schedule is available at the Office of the County Engineer.

(3) A driveway location and construction plan shall be submitted with the permit application. Included on the plan shall be the driveway width, radius, location in relation to the property lines, road name, right-of-way line, north arrow and distance of the proposed driveway from other existing driveways and adjacent roads.

C. Review and approval procedures.

(1) Once the required submittal items are obtained, a site inspection shall be performed to verify that the location of the driveway is acceptable.

(2) A permit shall be issued once all items are reviewed and approved.

(3) A driveway form-up inspection shall be scheduled when notified by the applicant.

D. Construction, completion, and close out.

(1) A notification of completion shall be submitted to the Office of the County Engineer so that a final inspection can be scheduled. At final completion, the right-of-way shall be restored to its original condition or better and the constructed driveway shall meet all requirements per the approved permit.

(2) Driveways must be found satisfactory before a Certificate of Occupancy can be issued.

(3) It is the property owner's responsibility to maintain the driveway for safety and proper drainage.

Sec. 2.22.3 Stormwater Connection.

A. Applicability.

(1) An application is required for any connection to or expansion of a County stormwater facility, including but not limited to drainage retention areas or conveyance systems, not previously designed or permitted to include the applicant's improvements.

(2) The County has the right to refuse an application based on use, potential use, inadequacy, or potential inadequacy of a County stormwater facility at the discretion of the County Engineer.

B. Submittal requirements, review and approval.

(1) Stormwater Connection applications shall be submitted to and reviewed by the Office of the County Engineer.

(2) All applicants desiring to use a County stormwater facility shall:

(a) Be responsible for providing all documentation supporting their request. Documentation

shall include calculations and improvement plans based on the Marion County Land Development Code in effect at the time of the applicant's project submittal. The calculations shall be reviewed and approved following the development review procedures in the Marion County Land Development Code. Applicant may also be responsible for providing historical records supporting any values, calculations and assumptions.

(b) Pay a pro rata share of the cost of the County stormwater facility which the applicant seeks to use. The pro rata share shall be based on the cubic foot volume required by the applicant as compared to the cubic foot design volume of the County stormwater facility. Payment shall be as follows:

1. Payment for Land Acquisition. Applicant shall pay a onetime fee based on actual historical cost paid by the County or other public agency at time of acquisition of the stormwater facility. Should such cost not be readily available, the value shall be based on comparable land value for like properties following standard property appraiser practices.

2. Payment for Construction and Maintenance. Applicant shall pay a onetime fee of $0.18 per cubic foot for the cost of stormwater facility's initial construction and routine maintenance, consistent with County practices as periodically amended.

(c) Demonstrate that the County stormwater facility has adequate capacity to store the applicant's stormwater runoff and stormwater runoff from the entire watershed contributing to the stormwater facility. The applicant shall provide calculations and improvement plans documenting that the stormwater facility has the stated capacity. The calculations shall assume that all residential property in the contributing area is fully developed; shall include the volume of runoff from all non-residential property which is developed and does not have a dedicated stormwater facility; and shall include any applicable pre-development runoff from developed property that may have been permitted to discharge pre-development runoff.

(3) In the event that the County stormwater facility does not have adequate capacity to receive the applicant's stormwater runoff and the stormwater runoff from the entire watershed contributing stormwater runoff to the stormwater facility, the County may allow the applicant to enlarge or expand the stormwater facility within boundaries of property owned by the County. The applicant shall be credited the value of the applicant's construction cost to the fees charged by the County for use of the County stormwater facility. Where enlargement or expansion is required and additional stormwater volume is being created in the County stormwater facility in excess of the required volume, the County may also choose to credit a portion of the applicant's construction cost to the fees charged by the County for use of the County stormwater facility. Any credit to the fees shall not exceed the proposed payment to the County for construction and maintenance.

(4) A fee in the amount established by resolution of the Board shall be paid prior to project approval. The fee schedule is available at the Office of the County Engineer. Should the fees, as identified above, be in excess of twenty-five thousand dollars ($25,000.00), the applicant may request a payment option to be approved by the Board allowing full and final payment to occur over a time period not to exceed five (5) years upon such conditions the Board may deem appropriate.

(5) The applicant shall enter into an appropriate agreement with the County. The standard form of the agreement is available at the Office of the County Engineer. Said agreement shall bind the applicant, heirs, successors or assigns in interest to the property to be and remain financially responsible for payment of all fees; any hazardous materials or sewage effluent they have caused or allowed to enter the stormwater facility; and, to assume a pro rata share of the cost of

major maintenance of the stormwater facility, including that resulting from a natural disaster such as a sinkhole or other catastrophic occurrence. The agreement shall be recorded in the Official Records of Marion County, Florida.

(6) Permitting by other agencies. Any waivers, exemptions or partial exemptions granted by Marion County do not exempt the applicant from obtaining the appropriate permits from other agencies as applicable.

C. Completion and closeout.

Completion and close out shall be per the improvement application that the Stormwater Connection supports and per the terms of the agreement referenced above.

Sec. 2.22.4 Tree Removal Permit.

A. Purpose and intent.

(1) The purpose of this division is to regulate the protection, removal, replacement, and maintenance of trees from or in public and private property. Tree protection and replacement shall work cooperatively with landscaping requirements to preserve and enhance the aesthetic quality of Marion County, complementing the natural and built environments, while providing shade and habitat through:

(a) Preservation of existing trees and native plant communities;

(b) Replacement of trees that are removed;

(c) Maintenance of trees and

(d) Prevention of tree abuse; and

(e) Enforcement.

B. The preservation and replacement of trees and protected plant species shall apply to all development with the following exceptions:

(1) The removal of trees for purposes of conducting bona fide agricultural uses such as field crops, landscape nursery, citrus nursery, forest crops, animal husbandry, greenhouses, aquaculture, silviculture and the like, on lands with an agricultural zoning classification.

(2) Property used for bona fide agricultural use, as listed above, zoned other than agriculture and possessing an agriculture classification from the County Property Appraiser per § 193.461 FS. Lands with an urban land use designation may not use this exemption.

(3) On lands where either of the two exemptions above has enabled tree removal without a permit, no applications for any land use changes shall be made within one year of the tree removal date unless:

(a) The applicant provides tree replacement at 100 inches DBH of native trees per acre, or lower based on the pre-clearing density of existing trees, or

(b) The applicant/owner provides payment into a Tree Mitigation fund in the equivalent amount of planting 100 inches DBH of native trees per acre or lower, based on the pre-clearing density of existing trees.

(4) The removal of trees which have a DBH of less than 10 inches, except those trees which have been designated replacement and conservation trees pursuant to Sec. 6.8.10 F.

(5) The removal of trees on an individual parcel of record used or to be used for single-family dwellings.

(6) The removal of trees associated with the County's construction, rehabilitation, or routine maintenance of roads and drainage systems within public rights-of-way or easements.

(7) The removal of trees associated with the rehabilitation or routine maintenance of roads and drainage systems within private rights-of-way or easements.

(8) Tree removal or trimming for the construction of firebreaks, firelines, and surveying.

(9) The removal of trees which pose an immediate and direct threat to persons or property, and the removal of trees that are dead or dying due to natural causes.

(10) Transplanting of any size tree.

(11) Removal of trees required by a development plan which has been fully approved by the County.

(12) Removal of exotic tree or nuisance tree species as listed by the UF/IFAS Assessment of Non-native Plants, "Prohibited" or "Invasive – Not Recommended" tables, as updated.

C. Submittal requirements.

(1) Tree Removal Permit application can be obtained from (insert location).

(2) A fee in the amount established by resolution of the Board shall accompany the application. The fee schedule is available at the Office of the County Engineer.

(3) The application shall include either a site plan or recent aerial photograph of the location where the trees are to be removed and the proposed locations of replacement trees.

D. Review and approval procedures.

(1) The review time frame for each submittal for this application is five days.

(2) The County Landscape Architect shall review this application and approve, approve with conditions, or provide further direction.

(3) Conditions that may result in denial of the permit include, but are not limited to, the following:

(a) The tree's location, age, size, rarity, uniqueness, historic value, status as a specimen tree, or other outstanding quality as further defined in this Code.

(b) The proposed method of removal and the effect on surrounding protected trees or existing vegetation.

E. Completion and closeout.

Stand alone Tree Removal Permits shall expire one year from date of issuance. Trees authorized to be removed may not be removed after the permit expires unless a new permit is obtained pursuant to this subsection.

Sec. 2.22.5 Other applications from Marion County may include, but are not limited to, the following:

A. 4-H/FFA Animal Exemption;

B. Agricultural Building Permit Exemption;

C. Electric Substation Preemption;

D. Home Occupation Permit;

E. Mining;

F. Property Division Authorization;

G. Special Event Permit;

H. Temporary Sign Permit; and

I. Temporary Use Permit.

Article 3 Comprehensive Plan

Division 1 Purpose and intent.

A. Marion County shall maintain an adopted Comprehensive Plan, as required by the provisions of FS 163, to provide principles, guidelines, standards, and strategies, for the orderly and balanced future economic, social, physical, environmental, and fiscal development of the county that reflects community commitments to implement the Comprehensive Plan and its elements.

B. The Marion County Comprehensive Plan shall be produced and published by the Growth Services Department. The provisions of this Article are provided for reference and guidance for the implementation, maintenance, and amendment of the Comprehensive Plan pursuant to the provisions of FS 163.

C. The Marion County Comprehensive Plan shall be produced in two forms:

(1) The adopted Comprehensive Plan consists of the required and optional plan components formally adopted by ordinance of the Board, pursuant to the provisions of FS 163.

(2) The complete Comprehensive Plan consists of the adopted Comprehensive Plan, and the data and analysis materials which are the basis for the adopted Comprehensive Plan but are not formally adopted by the Board.

D. The adopted Comprehensive Plan shall consist of separate elements consistent with FS 163, structured as follows:

(1) Each element includes a minimum of one goal which provides a long-term end toward which programs or activities are ultimately directed.

(2) Each element includes a minimum of one objective which provides a specific, measureable, intermediate end that is achievable and marks progress toward a goal.

(3) Each element includes a minimum of one policy which provides the way in which programs and activities are conducted to achieve an identified goal or objective.

(4) An element may contain one or more map and/or tables which provide information, guidance, and/or support for a goal, objective, or policy.

E. The Marion County Comprehensive Plan shall establish meaningful and predictable standards for the use and development of land. The Plan shall provide meaningful guidelines for the content of the detailed land development and use regulations which shall be specified in this Land Development Code.

F. All land development regulations, codes, and procedures enacted or amended by the county shall be consistent with the adopted Marion County Comprehensive Plan.

G. All development orders or equivalent authorizations issued by the county shall be consistent with the adopted Marion County Comprehensive Plan.

Division 2 Adopted Comprehensive Plan Components

Sec. 3.2.1 Elements.

A. Future Land Use Element

(1) Future Land Use Element Appendix A.

(2) Future Land Use Element Appendix B

B. Transportation Element

C. Housing Element

D. Sanitary Sewer Element

E. Solid Waste Element
F. Stormwater Element
G. Potable Water Element
H. Natural Groundwater Aquifer Recharge Element
I. Conservation Element
J. Recreation and Open Space Element
K. Intergovernmental Coordination Element
L. Capital Improvements Element
M. Public School Facilities Element
N. Economic Element

Sec. 3.2.2 Maps.

A. Future Land Use Map Series
(1) Map 1, Marion County 2035 Future Land Use
(2) Map 2, Well & Wellhead Protection Areas
(3) Map 3, Coastal High Hazard Areas and Evacuation Routes
(4) Map 4, Rivers and Lakes (Waterbodies)
(5) Map 5, Floodplains per 2008 FEMA Maps
(6) Map 6, Wetlands
(7) Map 7, Commercially Valuable Minerals
(8) Map 8, Generalized Soils
(9) Map 9, General Topography
(10) Map 10, Archaeological and Historic Areas (General Locations)
(11) Map 11, Environmentally Sensitive Overlay Zones (ESOZ)
(12) Map 12, RESERVED
(13) Map 13, Transfer of Rights
(14) Map 14, Springs Protection Zones (SPZ)
(15) Map 15a, Circle Square Woods Employment Activity Center
(16) Map 15b1, Marion Oaks Regional Activity Center
(17) Map 15b2, Marion Oaks RGAC Concept Plan
(18) Map 15b3, Sunny Oaks/Heart of Florida Commerce Park RGAC Concept Plan
(19) Rural Activity Center Maps
(a) #2, Orange Lake
(b) #3, Flemington
(c) #4, Fairfield
(d) #5, Lowell
(e) #7, Blitchton
(f) #8, Fellowship
(g) #10, Ocala Estates
(h) #11, Rolling Hills
(i) #14, Rainbow Springs
(j) #16, Monroe's Corner
(k) #20, Brook's Buck & Doe
(l) #21, Moss Bluff

(m) #22, Nuby's Corner
(n) #23, Eureka
(o) #24, Orange Springs
(p) #25, Pedro
(q) #26, Castro's Corner
(r) #27, Summerfield
(s) #28, Lakeview
(t) #29, Forest Hammock
(u) #30, Romeo

(20) Development of Regional Impact and Florida Quality Development (DRI/FQD) Map "H" Master Plans

(a) Cold Springs Villages FQD
(b) Oak Run DRI
(c) On Top of the World DRI
(d) Del Webb's Spruce Creek Country Club FQD
(e) Spruce Creek South FQD
(f) Stonecrest DRI
(g) The Villages of Marion FQD
(h) Village of Rainbow Springs DRI

B. Transportation Map Series

(1) Map 2.1, Future Traffic Circulation – 2035 Functional Classifications
(2) Map 2.2., Future Traffic Circulation – Number of Lanes 2015
(3) Map 2.3, Future Traffic Circulation – Number of Lanes 2035
(4) Map 2.4, Future Transportation Corridors 2035
(5) Map 2.5, Existing Mass Transit
(6) Map 2.6, Rail Corridors
(7) Map 2.7, Existing and Future Bicycle and Pedestrian Network
(8) Map 2.8, Coastal Evacuation Routes
(9) Map 2.9, Airport Layout

Sec. 3.2.3 Future Land Use Designations, Overlays, and Special Areas**.**

A. Resource Protection.

(1) Conservation
(2) Natural Reservation
(3) Rural Preservation

B. Rural Land.

(1) Rural Land
(2) Rural Activity Center
(3) Rural Village District
(4) Rural Town DRI/FQD

C. Residential.

(1) Very Low Density Residential
(2) Low Density Residential
(3) Moderate Density Residential

(4) Medium Density Residential
(5) High Density Residential
(6) Multi-Family Residential Medium
(7) Multi-Family Residential High

D. Non-Residential.
(1) Professional Office
(2) Limited Commercial
(3) Commercial
(4) Industrial
(5) Equine Commercial Support District
(6) Specialized Commerce District

E. Mixed-Use.
(1) Urban Commerce District
(2) Urban Neighborhood District

F. Other/Specialty.
(1) Public
(2) Recreation
(3) Commercial Recreation

G. Overlay and Special Area Designations.
(1) Airport Overlay Zone (AOZ).
(2) Development of Regional Impact/Florida Quality Development.
(3) Employment Activity Center (EAC).
(4) Environmentally Sensitive Overlay Zone (ESOZ).
(5) Land Use Blending Overlay (LUBO).
(6) Military Operating Area (MOA).
(7) Regional Activity Centers (RGAC).
(8) Springs Protection Overlay Zone (SPZ).
(9) Urban Growth Boundary (UGB).
(10) Well/Wellhead Protection Zone (W/WHPA).

Division 3 Land Use Designation Special Provisions and Design Criteria

Sec. 3.3.1 Development specific FLUM amendment requirements

A. CPAA 2002-L11, Bent Tree Estates, Application PID #35625-000-00
B. CPAA 2011-L03, Ashley Farms, Application PID #13693-000-00
C. CPAA 2002-L21, Golden Ocala, Application PID #13668-000-02
D. CPAA 2007-L27, Bahia Oaks Unit 5, Application PID #3541-000-000
E. CPAA 2007-L17, Dozier, Application PID #49022-000-00
F. CPAA 2005-L55, Hamilton Island, PID #39397-000-00
G. CPAA 2006-L08, Summer Glen Phase 6, PID #44645-001-00

Sec. 3.3.2 Equine Commercial Support District

Equine Commercial Support Districts (ECSDs) are intended to provide commercial support facilities for equine-related activities for designated Equine Centers consistent with the following

development provisions and designs requirements:

A. Designated Equine Centers.

(1) Florida Horse Park at the Marjorie Harris Carr Cross-Florida Greenway, 11008 South Highway 475.

(2) Ocala Breeders and Sales Auction and Race Track Complex, 1701 SW 60th Avenue.

(3) Marion County Southeastern Livestock Pavilion at the Marion County Agricultural Extension Service Complex, 2232 NE Jacksonville Road.

B. Authorization and implementation criteria

(1) Each ECSD shall be implemented and developed through a single coordinated Planned Unit Development (PUD) application and supporting Master Plan as provided in Articles 2 and 4.

(2) The ECSD PUD shall encompass the aggregate acreage of the respective ECSD and provide for a coordinated and continuous plan of development throughout the ECSD.

(3) The ECSD PUD shall analyze and demonstrate the following:

(a) The compatibility of the ECSD with adjacent rural or agricultural uses, if any; and

(b) The impact, if any, on environmentally sensitive land.

C. Design Standards

(1) Natural open space

(a) The ECSD must be developed with not less than 20 percent natural open space, determined on an ECSD-wide basis, with a maximum buildable area of 80 percent.

(b) The natural open space shall comply with the natural open space criteria listed in Section 6.4.#.

(2) Maximum Development Intensity – floor area ratio

(a) For projects providing less than 50 percent natural open space, the maximum floor area ratio shall not exceed 25 percent calculated based on the ECSD's buildable area.

(b) For projects providing greater than 50 percent natural open space, the maximum floor area ratio shall not exceed 25 percent calculated based on the gross land area of the ESCD.

(3) Development Form

(a) The buildable area within the ECSD shall be compact, clustered and provide a contiguous development pattern. Deviation from the reasonably compact requirement shall be allowed only when necessary for the protection of environmentally sensitive lands and locally significant resources.

(b) A compact centralized design providing a walk-able, non-automotive dependent environment shall be provided within the ECSD including passive facilities such as pedestrian, bicycle, golf cart, or equestrian facilities. Non-automotive connectivity to the respective Equine Center and related, similar or compatible surrounding development shall also be accommodated and provided.

(c) The buildable area for all non-agricultural development shall be internally located within the ECSD, and shall not be located along or focused towards the ECSD's boundary.

(d) Parcels containing hotels, retail and office uses may not exceed 60 percent of the total acreage of the ECSD, in aggregate.

(e) All development within an ECSD shall be fully served by central water and central sewer service. The use of septic tanks is prohibited on a temporary or permanent basis.

(4) Authorized uses within an ECSD

(a) Hotels and similar forms of resort/lodging facilities, and related accessory uses such as

private recreational facilities including conference facilities and meeting rooms; restaurants and dining facilities; internal retail personal services, spa services, shops, boutiques, and galleries; swimming pools, tennis courts, shuffleboard, and other active and passive recreational facilities; maintenance and service buildings; management and administrative facilities including owner's or manager's apartments or residences; and other common facilities needed to provide a resort type development.

(b) Recreational vehicle (RV) parks for temporary accommodations of maximum uninterrupted stays of no more than 30 days such as: fifth wheel travel trailer, travel trailers, camping trailer, truck camper, motor home, and conversion van/truck type RVs, and related accessory use consistent with those listed above for hotels and lodging facilities.

(c) Riding academy, dude ranch, and other schools/training facilities primarily focused on horses and equine activities.

(d) Public parks, and recreational and entertainment facilities.

(e) Veterinary offices, clinics, or hospitals.

(f) Retail facilities and businesses for which sales include equine or agricultural related products, including tack, hardware, and farm and garden supplies, with no outside storage visible from public rights of way.

(g) Restaurants and dining facilities of a "sit down" or "family" nature, open to the general public, and focused on serving primarily those uses of the other facilities within the District (no fast food or drive-through/drive-thru restaurants).

(h) Specialty retail shops and boutiques purveying arts, antiques, crafts, books, clothing, gourmet foods and groceries, home décor and furnishings, sporting goods, jewelry, and other specialty items consistent with the tourism- and equine-related character of the District. Such retail shops and boutiques shall be internally oriented to the District.

(i) Professional offices housing support operations serving or primarily related to equine or agricultural activities,

(j) Accessory service uses including the parking of vehicles used for the permitted business purposes.

Sec. 3.3.3 Rural Land - development density bonuses.

A. Density Bonus Options. Properties subject to a rural land use designation located outside the Urban Growth Boundary and outside the Farmland Preservation Area as depicted on the Future Land Use Map Series Map 13, *Transfer of Rights*, may be eligible for development at an increased density in accordance with one of the following density bonus design programs:

(1) Residential Clustering Option.

(a) Authorization and approval to develop under this density bonus option shall be obtained through the Planned Unit Development (PUD) process as provided in Article 4.

(b) The following natural open space design standards shall be satisfied:

1. A minimum of 60 percent of the gross land area of the development site shall be designated natural open space.

(c) The natural open space shall comply with the natural open space criteria listed in Section 6.4.#. Design Points Schedule

The bonus points in Table 3.3.3-1 apply to residential cluster developments. All other development requirements must be met in order to obtain the bonus. The various bonuses are additive except as noted. Total maximum bonus credits may not exceed 50 points. No other density bonuses may be applied to a Residential Cluster Option development.

Table 3.3.3-1 Residential Clustering Bonus Points

Point Criteria Item (not cumulative per criteria or sub-criteria)			Points
1	Proximity to existing development – Urban Growth Boundary (UGB)		
	Greater than five (5) miles of the UGB		0
	Greater than three (3) miles but less than five (5) miles of the UGB		1
	Greater than one (1) mile but less than three (3) miles of the UGB		2
	Within one (1) mile or less of the UGB		3
2	Proximity to fire and EMS protection		
	a. Fire protection water supply		
		No specific and fixed fire protection water supply provided within project	0
		Fixed fire protection water supply provided with below or above ground storage tanks within project meeting NFPA distance requirements	2
		Fixed fire protection water supply provided with central water system with hydrant(s) within the project meeting NFPA distance requirements	4
	b. Fire station		
		No fire station (volunteer or permanent/manned) within five (5) road miles as travelled by a fire truck	0
		Volunteer fire station within five (5) road miles as travelled by a fire truck	1
		Permanent/manned fire station within five (5) road miles as travelled by a fire truck	2
3	Proximity to sheriff protection as travelled by roadway to District or Sub-District Office from project entrance; however a stabilized emergency access shall not qualify as such an entrance.		
		District or Sub-District Sheriff Office ten (10) or more miles away	0
		District or Sub-District Sheriff Office five (5) or more miles but less than ten (10) miles	1
		District or Sub-District Sheriff Office less than five (5) miles	3
4	Access road characteristics		
	a. Project connectivity and through road access		
		Internal project roadways connect to a non-through road and form a functionally limited one-way in/out dead-end/cul-de-sac project	0
		Internal project roadways connect to a through road, but form a functionally limited one-way in/out dead-end/cul-de-sac project	1
		Internal project roadways provide, create, or establish through road access for a previously non-through road, but also form a functionally limited one-way in/out dead-end/cul-de-sac project	2
		Internal project roadways provide, create, or establish through road access for a previously non-through road, and do not form a functionally limited one-way in/out dead-end/cul-de-sac project	3
	c. Condition and maintenance of external road network		
		Internal project roadways connect to private road of any type not maintained by government	0
		Internal project roadways connect to stabilized road maintained by County or other municipal government	1
		Internal project roadways connect to asphalt paved road maintained by County or other municipal government	2
		Internal project roadways connect to asphalt paved road maintained by State	3
	d. Classification of external road network		
		Internal project roadways connect to Arterial classified road	0
		Internal project roadways connect to Collector classified road	1
		Internal project roadways connect to local classified road	2
5	Access and utilization of central water and sewer		

Point Criteria Item (not cumulative per criteria or sub-criteria)			Points
	a.	Central water	
		No central water systems provided	0
		Private central water system provided but does not meet fire flow requirements	1
		Private central water system meeting fire flow requirements provided	2
		Public central water system provided but does not meet fire flow requirements	3
		Public central water system meeting fire flow requirements provided	4
	b.	Central sewer	
		Septic tanks with no centralized sewer systems of any type provided	0
		Septic tanks with centralized effluent treatment system	1
		Private central sewer system provided by package treatment plant	1
		Private central sewer system provided by full scale sewer plant	3
		Public central sewer system provided by full scale sewer plant	5
6	Proximity to schools		
	a.	Elementary School	
		No elementary school within two (2) miles	0
		Elementary school within two (2) miles	1
	b.	Middle School	
		No middle school within five (5)miles	0
		Middle school within five (5) miles	1
	c.	High School	
		No high school within ten (10) miles	0
		High school within ten (10) miles	1
7	Reservation of natural open space		
	a.	Extent of Reservation	
		Reservation of 60% of gross land area (minimum required)	0
		Reservation exceeding 70% of gross land area	3
		Reservation exceeding 80% of gross land area	6
	b.	Type of Reservation	
		Reservation limited solely by plat designation	0
		Reservation limited by plat designation and conservation easement to Marion County	1
		Reservation limited by conservation easement to Marion County with fee title conveyance to HOA for management	2
8	Provision of low and moderate income housing (up to a maximum of 10 points)		
	a.	Moderate income housing	
		For each moderate income housing unit provided	1
	b.	Low income housing	
		For each low income housing unit provided	2

(d) Credit calculation example.

1. Standard density is 1 dwelling unit/10 acres.
2. Points achieved is 35, which becomes the percent bonus – 0.35.
3. Adjusted density including bonus is 1.35 dwelling units/10 acres, or 1 dwelling unit/7.4 acres.

(2) Hamlet Subdivision Option

(a) Authorization and implementation criteria

1. A hamlet subdivision shall be implemented through rezoning of the development site to

A-3 (Agricultural Residential Estate) and obtaining a concurrent Special Use Permit as provided in Articles 2 and 4.

2. Creation of a hamlet shall be conducted through the subdivision processes as provided in Article 2, Divisions 13–15, upon completion of the rezoning and Special Use Permit process in Item (a).
3. No hamlet may be created within the Farmland Preservation Area (Sending Area) as shown on Marion County Comprehensive Plan Future Land Use Map Series Map 13, Transfer of Rights.

(b) The following provisions shall apply for the implementation of hamlet development projects:

1. Size and phasing
   a. An individual hamlet shall include a minimum of forty (40) acres up to one hundred fifty-nine (159) acres.
   b. Authorization to create one or more hamlet projects as a coordinated and contiguous multiple phase project may be authorized subject to the following:
      1. A multiple phase plan shall be submitted as part of the authorization and approval process in Item (a), and
      2. Each phase shall comply with the design and development provisions for hamlets so that each hamlet functionally "stands-alone" and standards for compliance for one phase are not dependent upon another phase to be satisfied.
2. A maximum of 150 lots per year will be allotted for use in development projects utilizing the hamlet option.
3. Criteria used to review the Special Use Permit application for a hamlet development proposal shall include, but not be limited to, the following:
   a. Compatibility with and size of adjacent parcels.
   b. Proximity to commercial services.
   c. Proximity to emergency services.
   d. Vehicular access to arterial, collector and local roads.
   e. Traffic volume on potentially impacted roadways.
   f. Proximity to central water and sewer facilities.
   g. Extent of contiguous clustering.
   h. Provisions for implementation of farm best management practices
4. In the event a Preliminary Plat is not approved within 12 months of the approval of the Special Use Permit for a Hamlet, or if an approved Preliminary Plat expires prior to approval of the Final Plat, the Special Use Permit shall be void and use of the property shall be limited to those allowed under the A-3 zoning classification.

(c) The following design standards shall be satisfied for all hamlets:

1. All developable parcels in a hamlet shall have frontage upon and access to paved roads.
2. All hamlets shall provide natural open space consistent with the following provisions:
   a. A hamlet development is required to cluster residential development on a maximum 40 percent of the gross land area and to protect a minimum of 60 percent of the gross land area as natural open space.
   b. The natural open space shall comply with the natural open space criteria listed in Section 6.4.#.

3. The net buildable area shall be reasonably compact, clustered and sited in the same general location of the land area. Deviation from the reasonably compact requirement shall be allowed only when necessary for the protection of environmentally sensitive lands and locally significant resources.

(d) Hamlet options, densities and special design criteria:

1. Option 1.
   a. The density shall not exceed one (1) dwelling unit per five (5) gross acres, wherein each lot or tract created must be a minimum of five (5) gross acres in size.
   b. Water and sewer service shall be provided consistent with the provisions of Article 7.
   c. A permanent fire protection water supply(s) shall be provided by one of the following methods consistent with Article 7:
      1. Fire flow and hydrants provided by the central water system, or
      2. Ground or surface storage tanks, including providing a fire hydrant/supply connection(s), consistent with the provisions of Article 7.
2. Option 2.
   a. The density shall not exceed one (1) dwelling unit per each 3.5 acres (calculated on the gross acreage).
   b. The natural open space shall be delineated as a separate tract from the individual developable parcels and shall remain under the ownership of the developer, home or property owner's association, or conveyed as an undivided interest to the owners of developable land within the hamlet.
   c. All development within the hamlet shall be connected to a central water system.
   d. A permanent fire protection water supply(s) shall be provided by one of the following methods consistent with Article 7:
      1. Fire flow and hydrants provided by the central water system, or
      2. Ground or surface storage tanks, including providing a fire hydrant/supply connection(s), consistent with the provisions of Article 7.
   e. Sanitary sewer service shall be provided as required in Article 7; however the connection distance measurement used in determining if connection to a central sewer system is required shall be measured from the hamlet's gross land area boundary to the nearest connection point, and not the developable area or area where the hamlet improvements are located.

B. Development using more than one of the above density bonus design programs is prohibited.

C. Properties resulting from the use of a density bonus program shall not be eligible for additional bonus densities, under other programs or development options, including, but not limited to, family/guest cottages.

Sec. 3.3.4 Rural Village District.

Rural Village Districts (RVDs) are intended to provide for clustered mixed-use development in the Rural Lands in a manner which preserves natural open space including environmentally sensitive lands, and agricultural uses, establish a compact and clustered internally oriented non-automotive dependent community along the lines of "neo-traditional neighborhood design" concepts, and provide a physical and economic focal point for the surrounding Rural Lands, and discourage and prevent urban sprawl.

A. Authorization and implementation criteria

(1) Each RVD shall be implemented and developed through a single coordinated Planned Unit Development (PUD) application and supporting Master Plan as provided in Articles 2 and 4.

(2) The RVD PUD shall encompass the aggregate acreage of the respective RVD and provide for a coordinated and continuous plan of development throughout the RVD.

(3) The RVD PUD shall analyze and demonstrate the following:

(a) The compatibility of the RVD with adjacent rural or agricultural uses, if any, and

(b) The impact, if any, on environmentally sensitive land.

B. RVD options, natural open space, buildable area and gross density.

(1) RVDs shall comply with the development standards listed in Table 3.3.4-1 below:

Table 3.3.4-1. Rural Village District Open Space, Buildable Area and Density Standards

RVD Option	Minimum Natural Open Space	Maximum Buildable Area	Gross Maximum Density for all Residential Land Uses
1	80%	20%	1 dwelling unit per 5 acres
2	60%	40%	1 dwelling unit per acre

(2) The gross maximum density for all residential land uses for the RVD shall be calculated on the gross acreage of the RVD. The resulting residential dwelling units shall then be allocated to the applicable residential land use areas as authorized for the RVD consistent with Item C.

(3) Full build-out of the gross maximum density is not required; however RVDs are not eligible for bonus densities. Additional residential units above the gross maximum density may only be provided as a function of the commercial/residential and workplace land use types as provided in this Section.

C. RVD buildable area land use types, standards, and intensities:

(1) Land use types

(a) RVD Residential: Land designated for residential unit development for single-family detached and attached housing, or multi-family housing consistent with the following densities:

1. RVD-Low Density Residential: less than two dwelling units per net acre.
2. RVD-Medium Density Residential: 2.1 to 5 dwelling units per net acre.
3. RVD-High Density Residential: 5.1 to 10 dwelling units per net acre.

(b) RVD-Public: Land designated for public use shall contain community areas generally available and open to the public for gatherings and available for passive or active recreation purposes such as improved open space, parks, squares, and trails. Public land use areas may include open squares or other similarly designed open-air venues or areas incorporating furniture or amenities designed to accommodate the general public for outdoor dining space.

(c) RVD-Civic: Land designated for civic use shall contain public buildings or community facilities such as meeting halls, libraries, post offices, schools, child care centers, club houses, religious buildings, recreational facilities, museums, cultural societies, visual and performing arts buildings, utility facilities, and municipal buildings.

(d) RVD-Commercial/Residential: Land designated for commercial retail and office uses, that include residential accommodations and/or units, such as retail, restaurant, club, corporate office, medical, entertainment, lodging, artisan, and residential. The residential units provided are eligible for any residential occupancy and not limited to accessory

occupancy from the commercial land use, and the residential units provided are in addition to those residential units provided in the RVD-Low, RVD-Medium, and RVD-High land use areas.

(e) RVD-Workplace: Land designated for commercial and industrial uses, which are not required to provide for residential accommodations and/or units, such as corporate offices, light industry, artisan, warehousing, and automotive related businesses. The provision of residential units for workplace areas is not required or prohibited; however residential units may be provided in the workplace land use consistent with this Section, and any of the residential units provided are in addition to those residential units provided in the RVD-Low, RVD-Medium, and RVD-High land use areas.

(2) RVD land uses types shall be provided within the RVD's buildable area consistent with the following:

Table 3.3.4-2 RVD Land Use Mix Standards

RVD Land Use	Percentage of Buildable Area			
	Village Option 1		Village Option 2	
	Minimum	Maximum	Minimum	Maximum
RVD-Public	5	---	5	---
RVD-Civic	5	---	5	---
RVD-Low Density Residential	---	80	0	40
RVD-Medium Density Residential	N/P	N/P	20	60
RVD-High Density Residential	N/P	N/P	20	60
RVD-Commercial/Residential	2	30	2	30
RVD-Workplace	2	3	2	30

N/P = Not permitted.

(3) Maximum Development Intensity

(a) RVD residential land uses

1. Residential densities within each individual RVD residential land uses area, as listed in Section 3.3.4.B(1), shall comply with the maximum density of that respective RVD land use.
2. In aggregate, the total residential development of all the RVD residential land use areas shall not exceed the RVD Gross Maximum Density listed in Section 3.3.4.B, Table 3.3.4-1.

(b) Public land use

a. For projects providing a cumulative total of public land use areas less than or equal to five percent of the RVD buildable area, the maximum impervious surface area ratio shall be 0.35.

b. For projects providing a cumulative total of public land use areas exceeding five percent of the RVD buildable area, the maximum impervious surface area ratio shall be 0.70.

(c) Civic land use

1. For projects providing a cumulative total of civic land use areas less than or equal to five percent of the RVD buildable area, the maximum floor area ratio shall be 0.35.
2. For projects providing a cumulative total of civic land use areas exceeding five percent of the RVD buildable area, the maximum floor area ratio shall be 0.70.

(d) Commercial/Residential land use

1. The commercial/residential land use maximum floor area ratio shall be calculated based on the commercial component of the land use. Residential floor area shall be provided as listed, but shall not be calculated as part of the commercial floor area ratio, and shall be in addition to the commercial floor area.
2. Commercial floor area ratios
   a. For projects providing a cumulative total of commercial/residential land use areas less than or equal to five percent of the RVD buildable area, the maximum commercial floor area ratio shall be 0.30.
   b. For projects providing a cumulative total of commercial/residential land use areas exceeding five percent of the RVD buildable area, the maximum commercial floor area ratio shall be 0.70.
3. Residential square footage
   a. A minimum of 25 percent of the overall building square footage, excluding square footage dedicated to parking garage space, shall be dedicated to residential use.
   b. A maximum of 50 percent of the overall building square footage, excluding square footage dedicated to parking garage space, may be dedicated to residential use.
   c. The residential square footage shall be provided as part of the same overall building as the commercial square footage. The RVD PUD Master Plan may allow for single-use buildings within an individual lot/tract/parcel within the RVD commercial/residential provided a minimum of one on-site building within the same lot/tract/parcel will include both commercial and residential square footage; however such a site shall be maintained and operated as a single lot/tract/parcel.
   d. The rate of division or separation of the residential floor area into respective residential units shall be at the discretion of the Developer; however each residential unit provided shall be a complete stand-alone unit, including full kitchen and bathroom facilities, a minimum of 500 square feet in size.
   e. The provision of residential units within commercial/residential land use areas is permitted and revisions or increases in the number of residential units provided shall not require revised or updated UND PUD Master Plan approval, subject to consistency with the other design standards previously listed.
   f. In aggregate, the total residential development of the commercial/residential land use shall not be required to be counted as part of the RVD's gross residential development as listed in Section 3.3.4.(B) Table 3.3.4-1.

(e) Workplace land use

1. The workplace land use maximum floor area ratio shall be calculated based solely on the non-residential workplace component of the land use. Residential floor area may be provided, but shall not be calculated as part of the workplace floor area ratio, and shall be in addition to the non-residential workplace floor area.
2. For projects providing workplace land use areas less than or equal to five percent of the RVD buildable area, the maximum non-residential floor area ratio shall be 0.30.
3. For projects providing workplace land use areas exceeding five percent of the RVD buildable area, the maximum non-residential floor area ratio shall be 0.70.
4. Each residential unit provided shall be a complete stand-alone unit, including full kitchen and bathroom facilities, a minimum of 500 square feet in size.
5. Residential units may be provided as part of the workplace land use provided the residential units are part of the same overall building(s). The number of residential units

is not limited; however, the number of residential units eligible for development within the workplace land use shall be based on the acquisition and use/redemption of Transfer of Development Rights credits created and available through Marion County's Transfer of Development Rights Program as provided in Section 3.4.1. The provision of TDC based residential units within workplace land use areas shall be permitted without requiring revised or updated UND PUD Master Plan approval for the addition of TDC based residential units, provided the ability to use TDCs for the UND residential land use areas was declared in the effective RVD PUD Master Plan.

6. The residential square footage of the residential units shall be provided as part of the same overall building as the workplace square footage; however the residential square footage shall not included in the non-residential floor area ratio calculations. The RVD PUD Master Plan may allow for single-use buildings within an individual lot/tract/parcel within the RVD workplace provided a minimum of one on-site building within the same lot/tract/parcel will include both commercial and residential square footage; however such a site shall be maintained and operated as a single lot/tract/parcel.

D. Design Standards

(1) Affordable housing shall be provided within the RVD as follows:

(a) Twenty percent of the residential units within an RVD shall be affordable to low income households as defined by the State of Florida's and Marion County's annually established income thresholds as applied through Marion County's State Housing Initiatives Partnership (SHIP) and/or Community Development Block Grant (CBDG) Programs.

(b) The twenty percent shall be calculated based on the aggregate total of residential units provided in the residential land use areas (RVD-Low, RVD-Medium, and RVD-High, as applicable). Residential units within the commercial/residential or Workplace land uses shall not be part of the aggregate total used to determine the number of low income affordable housing units required; however, residential units provided in the commercial/residential and workplace land uses may be used to satisfy all or a portion of the low income housing requirement.

(c) The residential units established and provided to satisfy the low income housing requirement shall be maintained as low income housing units consist with the standards of the Marion County SHIP and/or CDBG Programs, including incorporating the residential units into the Program's administration and maintenance management systems.

(d) In the event the RVD PUD Master Plan establishes that the RVD's required affordable housing will be provided by all or a portion of the commercial/residential and/or workplace land use development, a recorded Developer's Agreement shall be provided to specifying and establish the minimum number of required affordable housing units for those land uses so as to clearly establish the obligation for provision of affordable housing for the respective sites.

(e) A RVD project proposed as a time-share condominium may be exempted from this affordable housing requirement, provided the declaration of time-share is made with the filing of the RVD PUD Master Plan and all necessary filings with the State of Florida to establish the time-share operation are filed prior to or concurrent with the filing and recording of the RVD PUD Final Plat. In the event the filing to establish the time-share operation are not completed or abandoned by the applicant, the RVD project may not proceed to filing and recording of the Final Plat without complying with the affordable housing requirement as listed previously, up to and including obtaining a revised RVD PUD Master Plan approval consistent with Article 4.??? (PUD Amendment through BCC)

(2) Natural open space

(a) The minimum natural open space shall be provided within the RVD consistent with Section 3.3.4.b(1) Table 3.3.4-1.

(b) The natural open space shall comply with the natural open space criteria listed in section 6.4.#.

(3) Development form.

(a) The buildable area shall be compact and clustered to provide a contiguous development pattern within the RVD. Deviation from the reasonably compact requirement shall be allowed only when necessary for the protection of environmentally sensitive lands and locally significant resources.

(b) The RVD shall reflect a compact centralized design providing a walk-able, non-automotive dependent environment within the RVD, including facilities such as pedestrian, bicycle, golf cart, and equestrian facilities.

(c) All development within an RVD shall be fully served by central water and central sewer service. The use of septic tanks is prohibited on a temporary or permanent basis.

(d) Residential land use development

1. Residential areas may consist of a variety of residential unit or housing types.
2. Residential areas may be provided in neighborhoods with the residential areas or neighborhoods focused around common public or civic land uses; such public or civic uses should serve to provide focus for and reinforce the identity of the surrounding neighborhood(s).

(e) Public and civic land use development.

1. Public and civic land uses should be located along streets and visually apparent to surrounding areas, except to screen loading/unloading and refuse collection areas.
2. The placement of buildings in the residential, commercial/residential and workplace land uses should generally surround the public and civic land uses wherein visual connectivity with the public and civic spaces is encouraged and maintained.
3. The RVD PUD application shall specify the methods of ownership and maintenance of the public and civic land uses. The focus of the RVD is for such facilities to be owned and operated by the RVD community; however, such facilities may be conveyed to governmental organizations and/or to quasi—governmental/special district operations upon approval by the Board.

(f) Commercial/residential and workplace land use development

1. Commercial/residential uses shall be centrally located within and generally surrounded by the RVD buildable area to provide a focus and town/village center effect for the surrounding RVD buildable area.
2. Workplace uses within the RVD buildable area may extend to the RVD buildable area perimeter; however the perimeter distance exposure of the workplace uses shall not exceed 20 percent of the RVD buildable area perimeter.
3. Neither commercial/residential or workplace land uses shall be located on the gross perimeter of the overall RVD development; however, in the event a new public Marion County Functional Classification roadway network connection or Section/Quarter-Section Line collector roadway system is created and provided by the RVD development through the RVD buildable area, the commercial/residential and workplace land uses may front on the newly created roadway(s) within the RVD buildable area.
4. Commercial/residential and workplace land use development shall be provided in a form which promotes visual connectivity to street/sidewalk activities, particularly for ground

level areas. Outdoor shopping and dining spaces are encouraged, especially providing them as open-air canopy or colonnade covered "front porch/yard" facilities contributing to a pedestrian environment providing all weather cover.

(g) Streets and parking

1. The RVD PUD application will provide operating classifications for all roadways created within the RVD. All roadways within an RVD may be used to provide on-street parking, except for roadways which will extend, complete, or connect the Marion County Functional Classification roadway system or Section/Quarter-Section Line collector roadway system; however, such a roadway which is wholly internal to the RVD buildable area may be proposed to allow on-street parking as part of the RVD PUD application process and subject to the final RVD PUD application approval. Reductions in the number of parking spaces are encouraged such as using shared and coordinated parking, and providing for multi-modal access within the RVD.
2. On-street parking directly fronting a lot/tract/parcel may be counted toward fulfilling the parking requirement of the fronting use, regardless of the use; however such on-street parking may not be credited to more than one use except when shared parking systems are approved.
3. Parking lots and/or parking garages.
   a. Parking lots shall provide parking spaces equal to or less than the number of required parking spaces based on the site use(s). When parking spaces will exceed the number of required parking spaces, all excess parking must occur within a multi-story parking garage, which may be a stand-alone structure or be integrated into the respective building generating the parking need.
   b. Parking lots/garages shall generally be located at the rear or at the side of buildings and shall be screened from the sidewalk by year-round opaque materials.
   c. Parking lots/garages shall not abut more than one street intersection or occupy any lot which terminates a street vista; however the RVD PUD application may propose a "community" parking garage that serves multiple/surrounding sites which encompasses all or a portion of a lot/tract/parcel; however mechanisms must be established to ensure ownership and maintenance of the garage by the surrounding property owners allotted space within the garage.
   d. Parking garage square footage is exempt from inclusion when determining floor area ratios for commercial/residential or workplace land uses; however the parking garage square footage may not be used for non-vehicle parking such as storage or other uses either permanently or temporarily.
4. Parallel, interconnected, and/or alternative access for parking lots and/or parking garages is required in order to enhance opportunities for vehicle circulation and providing access management, especially in coordination with pedestrian and non-automotive access activities.

Sec. 3.3.5 Rural Town.

Rural Towns (RTs) provide an opportunity to create a new and independent mixed-use community/town within the Rural Land which does not create or establish dependency on existing or new Urban Areas or rural communities, while providing a compact and clustered internally oriented non-automotive dependent community along the lines of "neo-traditional neighborhood design".

A. Authorization and implementation criteria

(1) Each RT shall be implemented and developed through a single coordinated Planning Unit Development (PUD) application and supporting Master Plan as provided in Articles 2 and 4.

(2) The RT PUD shall encompass the aggregate acreage of the respective RT and provide for a coordinated and continuous plan of development throughout the RT.

(3) The RT PUD shall demonstrate it complies with all terms and conditions of the applicable and corresponding Development of Regional Impact/Florida Quality Development Development Order and its included Master Plan Map "H".

(4) The RT PUD Master Plan shall analyze and demonstrate and demonstrate the following:

(a) The compatibility of the RT with adjacent rural or agricultural uses, in any, and

(b) The impact, if any, on environmentally sensitive land.

B. RT types, natural open space, buildable area, and gross density.

(1) RTs shall comply with the development standards listed in Table 3.3.5-1 below:

Table 3.3.5-1 Rural Town Open Space, Buildable Area and Density Standards

RT Type	Minimum Natural Open Space	Maximum Buildable Area	Gross Maximum Residential Density
DRI	65%	35%	2 dwelling units per acre
FQD	55%	45%	3 dwelling units per acre

(2) The gross maximum density for the RT shall be calculated on the gross acreage of RT.

(3) Full build-out of the gross maximum density is not required; however RTs are not eligible for bonus densities.

C. Rural Town Design Standards

(1) Affordable housing shall be provided within the RT as follows:

(a) Twenty percent of the residential units shall be affordable to moderate or low income households as defined by the State of Florida's and Marion County's annually established income thresholds as applied through Marion County's State Housing Initiatives Partnership (SHIP) and/or Community Development Block Grant (CBDG) Programs.

(b) The twenty percent shall be calculated based on the aggregate total of residential units provided.

(c) The residential units established and provided to satisfy the low or moderate income housing requirement shall be maintained as such affordable housing units consist with the standards of the Marion County SHIP and/or CDBG Programs, including incorporating the residential units into the Program's administration and maintenance management systems.

(2) Natural open space

(a) The minimum natural open space shall be provided within the RVD consistent with Section 3.3.5.B(1) Table 3.3.5-1.

(b) The natural open space shall comply with the natural open space criteria listed in Section 6.4.#.

(3) Development Form

(a) The design shall be consistent with a compact mixed-use type development. The RT buildable area shall be compact and clustered to provide a contiguous development pattern within the RT. Deviation from the reasonably compact requirement shall be allowed only when necessary for the protection of environmentally sensitive lands and locally significant resources.

(b) Residential densities shall be linked to a pedestrian-oriented town center, with the higher density development generally occurring in the core of the town center.

(c) Pedestrian, bicycle, and other multi-modal forms of access shall be provided to link the various elements of the RT together, and provide for access to areas outside the RT when suitable.

(d) Project design shall include a mix of development that potentially meets 100 percent of the neighborhood and public shopping needs and 50 percent of the employment needs for the residents.

(e) The land use mix shall complement the single use developments that already exist in the area of the RT.

(f) All development within the RT shall be served by central water and central sewer service. The use of septic tanks is prohibited on a temporary or permanent basis.

(g) The RT development shall bear all costs for the extension of services and facilities needed to serve the development.

(h) Financial assurances that the level of service for any county or state infrastructure facility will not be lowered by the proposed rural town development below the adopted level of service (LOS) standard are to be provided in order to secure project approval.

(i) Streets and parking

1. The RT PUD will provide operating classifications for all roadways created within the RT. All roadways within an RT may be used to provide on-street parking, except for roadways which will extend, complete, or connect the Marion County Functional Classification roadway system or Section/Quarter-Section Line collector roadway system; however, such a roadway which is wholly internal to the RT may be proposed to allow on-street parking as part of the RT PUD consideration and review process and subject to the RT PUD approval. Reductions in the number of parking spaces are encouraged such as using shared and coordinated parking, and providing for multi-modal access within the RT.

2. On-street parking directly fronting a lot/tract/parcel may be counted toward fulfilling the parking requirement of the fronting use, regardless of the use; however such on-street parking may not be credited to more than one use except when shared parking systems are approved.

3. Parking lots and/or parking garages.

   a. Parking lots shall provide parking spaces equal to or less than the number of required parking spaces based on the site use(s). When parking spaces will exceed the number of required parking spaces, all excess parking must occur within a multi-story parking garage, which may be a stand-alone structure or be integrated into the respective building generating the parking need.

   b. Parking lots/garages shall generally be located at the rear or at the side of buildings and shall be screened from the sidewalk by year-round opaque materials.

   c. Parking lots/garages shall not abut more than one street intersection or occupy any lot which terminates a street vista; however the RVD PUD application may propose a “community” parking garage that serves multiple/surrounding sites which encompasses all or a portion of a lot/tract/parcel; however mechanisms must be established to ensure ownership and maintenance of the garage by the surrounding property owners allotted space within the garage.

   d. Parking garage square footage is exempt from inclusion when determining floor area ratios for commercial/residential or workplace land uses; however the parking

garage square footage may not be used for non-vehicle parking such as storage or other uses either permanently or temporarily.

4. Parallel, interconnected, and/or alternative access for parking lots and/or parking structures/garages is required in order to enhance opportunities for vehicle circulation and providing access management, especially in coordination with pedestrian and non-automotive access activities.

(4) Development Timing and Phasing

(a) Project design shall include development that potentially meets 100 percent of the neighborhood and public shopping needs and 50 percent of the employment needs for the residents must be included.

(b) Each building phase of the rural town is to include a balance of residential and non-residential uses, such as commercial uses, so that the proposed rural town develops and retains the characteristics of a mixed-use development. The rural town must provide for public facilities and institutional uses such as cultural and religious facilities, and active and passive recreational facilities, as needed by the residents of the proposed rural town.

Sec. 3.3.6 Urban Neighborhood District.

Urban Neighborhood Districts (UNDs) are intended to provide for a mixed-use development which is a compact, internally oriented, non-automotive dependent community along the lines of "neo-traditional neighborhood design" concept while integrating the UND within the surrounding and adjoining Urban Areas as a physical and economic focal point for the surrounding urban area. The preservation of environmentally sensitive lands as open space is to enhance the design form, economic, and social functions of the UND by providing areas for habitat preservation, passive and active recreational opportunities, and access to nature.

A. Authorization and implementation criteria

(1) Each UND shall be implemented and developed through a single coordinated Planned Unit Development (PUD) application and supporting Master Plan as provided in Articles 2 and 4.

(2) The UND PUD shall encompass the aggregate acreage of the respective UND and provide for a coordinated and continuous plan of development throughout the UND.

(3) The UND PUD shall analyze and demonstrate the following:

(a) The compatibility of the UND with adjacent uses, if any, and

(b) The impact, if any, on environmentally sensitive land.

B. UND buildable area land use types, standards, and intensities:

(1) Land uses

(a) Residential:

1. UND-Low Density Residential: less than one dwelling unit per net acre.

2. UND-Medium Density Residential: 1.1 to 4 dwelling units per net acre.

3. UND-High Density Residential: 4.1 to 8 dwelling units per net acre.

(b) UND-Public: Land designated for public use shall contain community areas generally available and open to the public for gatherings and available for passive or active recreation purposes such as improved open space, parks, squares, trails. Public land use areas may include open squares or other similarly designed open-air venues or areas incorporating furniture or amenities designed to accommodate the general public for outdoor dining space.

(c) UND-Civic: Land designated for civic use shall contain public buildings including meeting halls, libraries, post offices, schools, child care centers, club houses, religious buildings,

recreational facilities, museums, cultural societies, visual and performing arts buildings, municipal buildings.

(d) UND-Commercial/Residential: Land designated for commercial retail and office uses that include residential accommodations and/or units, such as retail, restaurant, club, corporate office, medical, entertainment, lodging, artisan, and residential. The residential units provided are eligible for any residential occupancy and not limited to accessory occupancy from the commercial land use, and the residential units provided are in addition to those residential units provided in the UND-Low, UND-Medium and UND-High land use areas.

(e) UND-Workplace: Land designated for commercial and industrial uses which are not required to provide for residential accommodations and/or units, such as corporate offices, light industry, artisan, warehousing, and automotive related businesses. The provision of residential units for workplace areas is not required or prohibited; however residential units may be provided in the workplace land use consistent with this Section, and any of the residential units provided are in addition to those residential units provided in the UND-Low, UND-Medium, and UND-High land use areas.

(2) UND land uses types shall be provided within the UND consistent with the following:

Table 3.3.6-1 UND Land Use Mix Standards

UND Land Use Area	Minimum %	Maximum %	Minimum Development Intensity	Maximum Development Intensity
UND-Public	15	---	---	---
UND-Civic	5	---	---	---
UND-Low Density Residential	0	36	1du/3 ac	1 du/ac
UND-Medium Density Residential	20	60	2 du/ac	4 du/ac
UND-High Density Residential	20	60	5 du/ac	8 du/ac
UND-Commercial/Residential	2	30		
UND-Workplace	2	30		

(3) Maximum Development Intensity

(a) Residential land uses

1. Residential densities within each individual UND residential land uses area, as listed in Section 3.3.6.B (1)(a), shall comply with the minimum and maximum densities of that respective UND residential land use.

2. Additional residential units may be added to each residential land use area based on the acquisition and use/redemption of Transfer of Development Credits (TDCs) created and available through Marion County's Transfer of Development Rights Program as provided in Section 3.4.1. The use of TDCs may increase a residential land use area's gross density by up to, but not more than, 2 du/ac above that land use standard maximum density. Such an increase in density shall be permitted without requiring revised or updated UND PUD Master Plan approval for the addition of TDC based residential units in a UND residential land use area, provided the ability to use TDCs for the UND residential land use areas was declared in the effective UND PUD Master Plan.

(b) Public land use

1. Public land use areas are intended to remain visually open areas providing public gathering space; accessory supporting facilities such as restrooms, outdoor stages,

viewing stands, and concessions may be provided. Such accessory supporting facilities shall comply with the following impervious surface area ratio standards:

a. For projects providing gross public land use areas less than or equal to 20 percent of the UND, the maximum impervious surface area ratio shall be 0.60.

b. For projects providing gross public land use areas exceeding 20 percent of the UND, the maximum impervious surface area ratio shall be 0.80.

c. For projects which preserve and maintain environmentally sensitive lands as open space in one or more public land use areas, the following will apply:

1. The maximum impervious surface amount of the gross public land use areas shall be calculated in aggregate among all public use areas.

2. The commercial/residential and workplace land use floor area ratios listed in this Section may be increased by up to an additional 0.20 FAR as part of the UND PUD Master Plan review and approval.

(c) Civic land use

1. For projects providing civic land use areas less than or equal to five percent of the UND, the maximum floor area ratio shall be 0.45.

2. For projects providing civic land use areas exceeding five percent of the UND, the maximum floor area ratio shall be 0.80.

(d) Commercial/Residential land use

1. The commercial/residential land use maximum floor area ratio shall be calculated based on the commercial component of the land use. Residential floor area shall be provided as listed, but shall not be calculated as part of the commercial floor area ratio.

2. Commercial floor area ratios

a. For projects providing commercial/residential land use areas less than or equal to five percent of the UND, the maximum commercial floor area ratio shall be 0.35.

b. For projects providing commercial/residential land use areas exceeding five percent, but less than or equal to 10 percent of the UND, the maximum commercial floor area ratio shall be 0.50.

c. For projects providing commercial/residential land use areas exceeding 10 percent of the UND, the maximum commercial floor area ratio shall be 0.70.

3. Residential square footage

a. A minimum of 25 percent of the overall building square footage, excluding square footage dedicated to parking garage space, shall be dedicated to residential use.

b. A maximum of 50 percent of the overall building square footage, excluding square footage dedicated to parking garage space, may be dedicated to residential use.

c. The residential square footage shall be provided as part of the same overall building as the commercial square footage. The UND PUD Master Plan may allow for single-use buildings within an individual lot/tract/parcel within the RVD commercial/residential provided a minimum of one on-site building within the same lot/tract/parcel will include both commercial and residential square footage; however such a site shall be maintained and operated as a single lot/tract/parcel.

d. The rate of division or separation of the residential floor area into respective residential units shall be at the discretion of the Developer; however each residential unit provided shall be a complete stand-alone unit, including full kitchen and bathroom facilities, a minimum of 500 square feet in size.

e. The provision of residential units within commercial/residential land use areas is permitted and revisions or increases in the number of residential units provided shall not require revised or updated UND PUD Master Plan approval, subject to consistency with the other design standards previously listed.

(e) Workplace land use

1. The workplace land use maximum floor area ratio shall be calculated based solely on the non-residential workplace component of the land use. Residential floor area may be provided as listed, but shall not be calculated as part of the workplace floor area ratio.
2. Non-residential workplace floor area ratios
   a. For projects providing workplace land use areas less than or equal to five percent of the UND, the maximum floor area ratio shall be 0.30.
   b. For projects providing workplace land use areas exceeding five percent of the UND, the maximum non-residential floor area ratio shall be 0.70.
   c. For projects providing workplace land use areas exceeding 10 percent of the UND, the maximum non-residential floor area ratio shall be 1.00.
3. Residential square footage
   a. Residential units may be provided as part of the workplace land use provided the residential units are part of the same overall building(s).
   b. Each residential unit provided shall be a complete stand-alone unit, including full kitchen and bathroom facilities, a minimum of 500 square feet in size.
   c. The number of residential units which may be provided is not limited; however, the number of residential units eligible for development within the workplace land use shall be based on the acquisition and use/redemption of Transfer of Development Rights Credits created and available through Marion County's Transfer of Development Rights Program as provided in Section 3.4.1. The provision of TDC based residential units within workplace land use areas shall be permitted without requiring revised or updated UND PUD Master Plan approval for the addition of TDC based residential units, provided the ability to use TDCs for the UND residential land use areas was declared in the effective UND PUD Master Plan.

C. Design Standards

(1) Environmentally sensitive lands located on-site should be preserved and incorporated in to the UND development by including such lands within public or civic land uses or as unique characteristics or focal areas for other UND land uses.

(2) Development Form.

(a) The UND development shall be compact and provide a contiguous development pattern within the UND. Deviation from the reasonably compact requirement shall be allowed only when necessary for the protection of environmentally sensitive lands and locally significant resources.

(b) The UND shall reflect a compact centralized design providing a walk-able, non-automotive dependent environment within the UND including facilities such as pedestrian, bicycle, and transit access.

(c) All development within an UND shall be fully served by central water and central sewer service. The use of septic tanks is prohibited on a temporary or permanent basis.

(d) Residential development

1. Residential areas may consist of a variety of residential unit or housing types.
2. Residential areas may be provided in neighborhoods with the residential areas or units

focused around common public or civic land uses; such public or civic uses should serve to provide focus for and reinforce the identity of the surrounding neighborhood(s).

(e) Public and civic development.

1. Public and civic land uses should be located along streets and visually apparent to surrounding areas, except to screen loading/unloading and refuse collection areas.
2. The placement of other buildings from the residential, commercial/residential and workplace land uses should generally surround the public and civic land uses wherein visual connectivity with the public and civic spaces is encouraged and maintained.
3. The UND PUD shall specify the methods of ownership and maintenance of the public and civic land uses. The focus of the UND is for such facilities to be owned and operated by the UND community; however, such facilities may be conveyed to governmental organizations and/or to quasi-governmental/special district operations upon approval by the Board.

(f) Commercial/Residential and Workplace development

1. Commercial/residential land uses shall be centrally located within and generally surrounded by the overall UND to provide a focus and town/village center effect for the surrounding UND.
2. Commercial/residential development should be provided in a form which promotes visual connectivity to street/sidewalk activities, particularly for ground level areas. Outdoor shopping and dining spaces are encouraged, especially providing them as canopy or colonnade covered “front porch/yard” facilities contributing to a pedestrian environment providing all weather cover.
3. Workplace land use development should be provided in a form which promotes visual connectivity to street/sidewalk activities, particularly for ground level areas, and provides for non-automotive connectivity to the UND town/village center.
4. Workplace land use development which may attract intense, disturbing or disruptive service and/or delivery traffic from outside the UND should be located readily accessible to the major roadway network within and surrounding the UND as well as be buffered to avoid impacts which may disturb or disrupt the UND town/village center and neighborhoods as well as surrounding areas.

(g) Streets and parking

1. The UND PUD will provide operating classifications for all roadways created within the UND. All roadways within a UND may be used to provide on-street parking, except for roadways which will extend, complete, or connect the Marion County Functional Classification roadway system or Section/Quarter-Section collector roadway system; however, such a collector roadway which is wholly internal to the UND may be proposed to allow on-street parking as part of the UND PUD Master Plan consideration and review process. On-street parking directly fronting a lot/tract/parcel may be counted toward fulfilling the parking requirement of the fronting use, regardless of the use.
2. Reductions in the number of parking spaces are encouraged such as by shared and coordinated parking.
3. Parking lots and/or parking garages
   a. Parking lots shall provide parking spaces equal to or less than the number of required parking spaces based on the site use(s). When parking spaces will exceed the number of required parking spaces, all excess parking must occur within a multi-story parking garage, which may be a stand-alone structure or be integrated into the respective building generating the parking need.

b. Parking lots/garages shall generally be located at the rear or at the side of buildings and shall be screened from the sidewalk by year-round opaque materials.

c. Parking lots/garages should be strategically located so as to provide walk-able access to surrounding UND development and shall not constitute more than 50 percent of the outer perimeter of the UND.

d. Parking garage square footage is exempt from inclusion when determining floor area ratios for commercial/residential or workplace land uses; however the parking garage square footage may not be used for non-vehicle parking such as storage or other uses either permanently or temporarily.

4. Parallel, interconnected, and/or alternative access for parking lots and/or parking garages is required in order to enhance opportunities for vehicle circulation and providing access management, especially in coordination with pedestrian and non-automotive access activities.

Sec. 3.3.7 Urban Commerce District.

Urban Commerce Districts (UCDs) are intended to provide for a mix of non-residential uses which may be complementary and/or supportive to each other while allowing for the provision of limited residential development in conjunction with commercial uses within the UCD.

A. Authorization and implementation criteria

(1) The implementation and development of a UCD designated site solely for non-residential uses may be implemented by obtaining one or more of the commercial or industrial zoning categories as listed in Article 4.

(2) The implementation and development of a UCD designated site to include residential use shall be implemented through a single coordinated Planned Unit Development (PUD) application and supporting Master Plan for the proposed project site as provided in Articles 2 and 4.

(3) A UCD PUD shall encompass the aggregate acreage of the respective UCD site and provide for a coordinated and continuous plan of development throughout the UCD site.

(4) A UCD PUD shall analyze and demonstrate the following:

(a) The compatibility of the UCD site with adjacent uses, if any, and

(b) The impact, if any, on environmentally sensitive land.

B. UCD buildable area land use types, standards, and intensities:

(1) Land uses

(a) Commercial/Residential: Land designated for commercial retail and office uses that include residential accommodations and/or units, such as retail, restaurant, club, corporate office, medical, entertainment, lodging, artisan, commercial trades, transportation, and residential. Residential units provided are eligible for any residential occupancy and not limited to accessory occupancy from the commercial land use.

(b) Industrial: Land designated for industrial uses such as light and heavy industry, heavy commercial uses accessory to an industrial use within the UCD are permitted, such as transportation operations for a production facility.

(2) UCD land use types and development standards shall be consistent with the following:

Table 3.3.7-1 UCD Land Use Mix Standards

UCD Land Use Area	Minimum %	Maximum %	Maximum Floor Area Ratio
Commercial/Residential	0	10	1.0
Commercial	25	100	2.0
Industrial	0	75	0.75

(3) Maximum Development Intensity and design

(a) Commercial/Residential land use

1. The commercial/residential land use maximum floor area ratio shall be calculated based on the commercial component of the land use. Residential floor area, if provided, shall not be calculated as part of the commercial floor area ratio.
2. The maximum floor area ratio shall be 1.00.
3. Residential development density and square footage
   a. Residential units developed as part of a UCD site shall not exceed a gross maximum density of 8 du/acre.
   b. Cumulative, not more than 10 percent of the gross UCD land area shall be developed for with residential development.
   c. Additional residential units may be added based on the acquisition and use/redemption of Transfer of Development Credits (TDCs) created and available through Marion County's Transfer of Development Rights Program as provided in Section 3.4.1. The use of TDCs may increase the gross density by up to, but not more than, 2 du/ac above 8 du/acre. Such an increase in density shall be permitted without requiring revised or updated UCD PUD Master Plan approval for the addition of TDC based residential units in a UCD residential land use area, provided the ability to use TDCs for the UCD residential land use areas was declared in the effective UCD PUD.
   d. The residential square footage shall be provided as part of the same overall building as the commercial square footage. The UCD PUD may allow for single-use buildings within an individual lot/tract/parcel within the UCD commercial/residential land use provided a minimum of one on-site building within the same lot/tract/parcel will include both commercial and residential square footage; however such a site shall be maintained and operated as a single lot/tract/parcel.
   e. The provision of residential units within commercial/residential land use areas is permitted and revisions or increases in the number of residential units provided shall not require revised or updated UCD PUD approval, subject to consistency with the other design standards previously listed.

(b) The commercial land use maximum floor area ratio shall be 2.0.

(c) The industrial land use maximum floor area ratio shall be 0.75.

(d) Parallel, interconnected, and/or alternative access for parking lots and/or parking garages is required in order to enhance opportunities for vehicle circulation and providing access management, especially in coordination with pedestrian and non-automotive access activities, as well as intensive, heavy truck traffic.

Division 4 Transfer of Rights Programs (TRPs)

Sec. 3.4.1 Purpose and Intent.

A. The Marion County TRPs are intended to protect, maintain, and preserve natural resources, environmentally sensitive lands, locally significant natural resources to maintain agricultural and natural open spaces while encouraging opportunities for increased densities to efficiently utilize public facilities and services in compact, contiguous, and when possible mixed-use development patterns.

B. The TRPs establish Sending and Receiving Areas wherein Transferrable Development Credits (TDCs) may be issued to a property owner, transferred between properties and/or parties, and then subsequently redeemed subject to additional development requirements.

C. The issuance of TDCs occurs when a Conservation Easement for the sending lands is recorded and a Statement of Issuance for Transferrable Development Credits is issued.

D. All issuance, transfer, and use/redemption of TDCs requires approval by the Board consistent with the provisions of their respective program.

Sec. 3.4.2 Transfer of Rights Programs descriptions.

A. Transfer of Development Rights (TDR) Program is designed to protect natural resources, especially those listed in Policy 1.1.2 of the Conservation Element and locally important and prime farmlands within Marion County. These resources include, but are not limited to, the preservation of high water recharge and underground drainage basins, springs, karst areas, sinkholes, sinks, sinkhole ponds, and other karst features.

B. Transfer of Vested Rights (TVR) Program is designed to minimize dense development of vested properties without central water, and sewer systems, and/or other supporting infrastructure, and thereby protect natural resources, encourage and enhance the development of larger parcels, reduce the County's inventory of vested properties, and permit the County to better plan for future growth.

Sec. 3.4.3 Applications to obtain Transferrable Development Credits (TDCs)

A. An applicant shall apply to the Marion County Growth Services Department, as indicated in Article 2, using the appropriate program application form and owner authorizations.

B. Upon approval by the Board, a Conservation Easement shall be recorded for the approved area. The Conservation Easement shall comply, at a minimum, with the provisions of Section 6.7.7 and the following criteria:

(1) Prohibit construction of more than one dwelling unit within the Conservation Easement, or no additional dwelling units if the Conservation Easement already has a dwelling unit. In the case of a Conservation Easement created under the Transfer of Vested Rights Program wherein individual blocks remain as single contiguous parcels as described in Section 3.4.4.B (4), each resulting parcel/block is eligible for one (1) dwelling unit as provided in this item.

(2) In the event the Conservation Easement contains more than one (1) dwelling unit, the additional dwelling unit(s) is permitted to remain as a non-conforming use and structure; however it shall not be expanded or increased in size regardless of circumstance.

(3) Prohibit non-residential development within the Conservation Easement other than bona fide agriculture-related structures. Human occupancy for residential or non-residential purposes outside the provision of Item (1) above is not permitted unless expressly approved by the Conservation Easement.

(4) Prohibit family divisions for residential development within the Conservation Easement.

(5) Prohibit family or guest cottage, apartment, or any other residential dwellings within the Conservation Easement.

(6) Provide that the owner of the property shall be deemed to have consented to the imposition of assessments on the property in connection with any municipal service taxing unit or municipal service benefits unit.

C. The Growth Services Department will issue a Statement of Issuance for Transferrable Development Credits to the owner/applicant following recording of the corresponding Conservation Easement.

Sec. 3.4.4 Transferrable Development Credits (TDCs) Sending Areas.

A. Transfer of Development Rights Program

(1) Location Criteria

(a) Lands designated as Rural Lands by Marion County Comprehensive Plan Future Land Use Map Series Map 1, Marion County 2035 Future Land Use Map, as amended which are located within the Farmland Preservation Area shown on Marion County Comprehensive Plan Future Land Use Map Series Map 13, Transfer of Rights; or

(b) Lands designated as Rural Lands by Marion County Comprehensive Plan Future Land Use Map Series Map 1, Marion County 2035 Future Land Use Map, as amended, outside the boundaries of the Farmland Preservation Area shown on Marion County Comprehensive Plan Future Land Use Map Series Map 13, Transfer of Rights which demonstrate the presence of, and are accepted by the County as having locally significant resources.

(2) Lands already subject to Conservation Easements conveyed to Marion County or other regulatory or private entities, or that have been set aside as natural open space while being used in the calculation of development entitlements for other development options within this Code, shall not be eligible for obtaining TDCs.

(3) Lands subject to restricted development conditions due to environmental or jurisdictional regulations may be eligible for obtaining TDCs; however the TDCs may be limited reflecting the limited and/or ineligible development nature of those affected lands.

(4) No sending area property shall be less than 30 acres in size and the corresponding Conservation Easement must be a minimum of 30 acres in size.

(5) TDCs may be issued to a participating property owner based on a maximum transfer rate of 10 TDCS per each full 10 acres encumbered by the corresponding Conservation Easement. The Board may elect to award TDCs in increments less than 10 TDCs to reflect acreage amounts of less than 10 acres at a maximum ratio of one TDC per acre, provided the Conservation Easement encumbers a minimum of 30 acres plus the additional acreage for which partial TDC credits are awarded. The number of TDCs awarded shall include a deduction for each existing or potential dwelling unit authorized by the Conservation Easement.

B. Transfer of Vested Rights Program

(1) Location Criteria

(a) Lands issued Vested Rights pursuant to Objective 1.6 of the Marion County Comprehensive Plan Future Land Use Element and Article 1 of this Code, or

(b) Lands identified as a “parcel of record” eligible for the purpose of constructing one single-family residence thereon pursuant to Appendix A, Section 4 of the Marion County Comprehensive Plan Future Land Use Element and Article 4 of this Code which are part of an antiquated subdivision identified by Marion County.

(2) Marion County’s antiquated subdivisions eligible for obtaining Transferrable Development Credits through the Transfer of Vested Rights Program shall be established by Board resolution. That list shall be maintained by the Growth Services Department.

(3) Lands identified as not likely to have central water and wastewater service in the most recent Marion County Water and Wastewater Master Plan, or are determined by the County Utility

Department as being unlikely to have central water and wastewater service within the next 10 years.

(4) Lands already subject to Conservation Easements conveyed to Marion County, or other regulatory or private entities, shall not be eligible for obtaining TDCs.

(5) Lands subject to restricted development conditions due to environmental or jurisdictional regulations not in effect at the time the subject property was established consistent with Section 3.4.4.B(1) may be eligible for obtaining TDCs; however the TDCs may be limited reflecting the limited and/or ineligible development nature of those affected lands.

(6) Properties resulting following the issuance of the TDCs shall:

(a) Be a minimum of 10 contiguous acres of real property.

(b) Lots/tracts/parcels separated only by road right-of-way shall be an exception, provided the whole block is combined into a single remaining parcel isolated and surrounded by the road right-of-way; however an applicant may propose elimination of the dividing road right-of-way to result in a larger unified conservation area wherein the road right-of-way acreage is awarded TDCs under the provisions of the Transfer of Development Rights Program provided the final resulting parcels are not less than 10 acres in size.

(c) Not create an isolated area or enclave within the same or an adjoining antiquated subdivision.

(7) TDCs may be issued to a participating property owner based on one TDC for each dwelling unit which is prohibited by the corresponding Conservation Easement. The number of TDCs awarded shall include a deduction for each existing or potential dwelling unit authorized by the Conservation Easement.

Sec. 3.4.5 Transferrable Development Credits (TDCs) Receiving Areas.

A. Transfer of Development Rights Program

TDR TDCs may be transferred to and used on lands identified on Marion County Comprehensive Plan Future Land Use Map Series Map 13, Transfer of Rights, in one of the following receiving categories:

(1) LEVEL I – The resulting gross density shall not exceed a rate of two dwelling units per acre above the maximum residential land use designation of the development site.

(2) LEVEL II – The resulting gross density shall not exceed 3 dwelling units per acre.

(3) LEVEL III – The resulting gross density shall not exceed one dwelling unit per acre.

(4) Lands subject to the following land use designations on the Marion County Comprehensive Plan Future Land Use Map Series Map 1, Marion County 2035 Future Land Use Map, as amended, consistent with the provisions applicable to those land use designations and the provisions within this Article:

(a) Very Low Density Residential

(b) Rural Village District

(c) Rural Town

(d) Urban Neighborhood District

B. Transfer of Vested Rights Program

TVR TDCs may be transferred to and used on lands identified on Marion County Comprehensive Plan Future Land Use Map Series Map 13, Transfer of Rights, in one of the following receiving categories:

(1) LEVEL I – The resulting gross density shall not exceed a rate of one dwelling unit per acre above the maximum residential land use designation of the development site.

(2) LEVEL II – The resulting gross density shall not exceed one dwelling unit per acre.

(3) Lands subject to the following land use designations on the Marion County Comprehensive Plan Future Land Use Map Series Map 1, Marion County 2035 Future Land Use Map, as amended, consistent with the provisions applicable to those land use designations and the provisions within this Article:

(a) Very Low Density Residential

(b) Urban Neighborhood District

Sec. 3.4.6 Transfers and use/redemption of Transferrable Development Credits (TDCs).

A. Transfers of TDCs

An applicant shall apply to the Marion County Growth Services Department, as indicated in Article 2, to convey TDCs between the Grantor and Grantee. The parties shall submit to the appropriate application forms and owner authorizations as indicated in Article 2.

B. Use/redemption of TDCs

(1) Authorization and implementation to use/redeem TDCs shall occur by submitting for review and approval through the Planned Unit Development process as provided in Articles 2 and 4.

(2) The use or redemption of TDCs acquired for a development site is not required and is not subject to a minimum amount of use. In the event a resulting development project does not use all of the TDCs originally acquired, the current holder of the TDCs is eligible to transfer/exchange the unredeemed TDCs.

(3) The acquisition of TDCs or not using all TDCs acquired does not exempt a development from compliance with any minimum density provisions applicable to the development site due to its corresponding land use designation on the Marion County Comprehensive Plan Future Land Use Map Series Map 1, Marion County 2035 Future Land Use Map, as amended.

(4) Development projects using/redeeming TDCs shall provide for water and wastewater services consistent with the following:

(a) Level I and Level II Areas – all development shall be served by central water and central sewer service.

(b) Level III Areas - shall comply with applicable water and sewer service criteria provided within this Code at the time of development approval.

(c) Lands subject to the following land use designations on the Marion County Comprehensive Plan Future Land Use Map Series Map 1, Marion County 2035 Future Land Use Map, as amended, shall be developed consistent with the provisions applicable to those land use designations and the provisions within this Article:

a. Very Low Density Residential

b. Rural Village District

c. Rural Town

d. Urban Neighborhood District

Division 5 Comprehensive Plan Amendment Process

Sec. 3.5.1 Applicability.

A. Amendments, modifications, or changes to the Marion County Comprehensive Plan may be initiated in one of two forms:

(1) The public may request or propose to amend, modify, or change a component of the adopted Marion County Comprehensive Plan by the filing of the appropriate Comprehensive Plan Amendment Application (CPAA) as provided in Article 2, Division 3.

(2) The Board may initiate proposals to amend, modify, or change a component of the adopted Marion County Comprehensive Plan. Such Board initiated changes shall not require the filing of a formal CPAA as provided in Article 2, Division 3.

B. The timing for the submission and general processing of all amendments, modifications, or changes to the Marion County Comprehensive Plan shall be established at the determination and discretion of the Board, consistent with the provisions of FS 163.

C. Any amendment initiated by CPAA or the Board shall be reviewed consistent with the provisions of Article 2, Division 3, this Article, the Marion County Comprehensive Plan, and FS 163.

Sec. 3.5.2 Growth Services Department staff review and recommendation

A. For a complete CPAA or a Board initiated amendment which applies to specific real property in order to change that property's land use designation as depicted on the Marion County Future Land Use Map Series Map 1, Marion County 2035 Future Land Use, the Growth Services Department Director may initiate a visit to the amendment site by a Growth Services Department staff member.

B. The Growth Services Department staff shall review each complete CPAA or Board initiated amendment and prepare a written staff report listing the Department's analysis and recommendation regarding the amendment.

C. The Department's staff report shall address the amendment's consistency with the Marion County Comprehensive Plan and FS 163.

D. The completed Department staff report shall be made available to the applicant, site owner if applicable, and public prior to the public hearing(s) regarding the amendment, as provided in Sections 3.5.4-6.

E. In the event the Department does not prepare a written staff report by the date the P&Z has set to officially act on the amendment, the Department shall be deemed to have recommended approval of the amendment. The P&Z shall not be required to make a recommendation on any such application as provided in Section 3.5.4.

F. In the event the Department does not prepare a written staff report by the date the Board has set to officially act on the amendment, the Department shall be deemed to have recommended approval of the amendment. The Board shall not be required to act in the affirmative in regards to the amendment due to the lack of a written staff report and recommendation by the Department as provided in Sections 3.5.5 and 3.5.6.

Sec. 3.5.3 Public notice for amendments

A. For all amendments, advertisement and notice of the public hearing(s) for consideration shall be provided consistent with the provisions of FS 163 and 125, in the advertising of an ordinance to consider an amendment to the Marion County Comprehensive Plan.

B. For CPAAs, submitted by an applicant and not initiated by the Board, which apply to specific real property in order to change that property's land use designation as depicted on the Marion County Future Land Use Map Series Map 1, Marion County 2035 Future Land Use, the following notice requirements shall also be met:

(1) Posting of public notice

(a) A public notice shall be posted on the property giving the particulars of the proposed amendment and the date, time and place of the public hearing(s).

(b) Growth Services Department staff will post this public notice within 5 working days of the appearance of the advertisement and notice of the public hearing(s) listed in Item A.

(c) The location and placement of the notice shall be in a manner determined by the Growth Services Director.

(d) The placement and posting of the public notice shall be deemed to satisfy compliance with this provision, and in the event the notice is not maintained once posted, this provision will be deemed satisfied.

(2) Notice to surrounding property owners

(a) All property owners within 300 feet of the boundary of the property which is the subject of the amendment shall be notified by mail of the proposed amendment with said notice giving the particulars of the amendment including, but not limited to, the date, time and place of the required public hearings, and a phone number which may be called for additional information.

(b) The latest data from the Property Appraiser's Office obtained within the 60 calendar day period preceding the public hearing, giving the name and address of adjacent property owners within 300 feet of the boundaries of the property to be included in the amendment shall be used for mailing the written notifications of the proposed amendment.

(3) Assessment of Costs

(a) The applicant may be required, as determined by the Board, to fund the costs necessary to comply with this sub-section B.

(b) The applicant may also be required, as determined by the Board, to fund the costs necessary to conduct any re-advertising and/or re-noticing in the event consideration of a CPAA is continued or deferred at the request of the applicant.

Sec. 3.5.4 Planning and Zoning Commission (P&Z) recommendation.

A. Meetings.

(1) The P&Z shall hold a public hearing to consider the amendment(s) as set forth in FS 163. Due public notice shall be provided for the public hearing consistent with the provisions of FS 163 and 125, and Article 1, Division 3.

(2) The P&Z may conduct a workshop to discuss the amendment(s) prior to the public hearing(s) subject to the workshop notice requirement(s) established by the Board. Any workshop discussion by the P&Z shall not constitute a determination regarding the amendment(s) nor shall it be considered to serve as or set precedent for the public hearing consideration to be conducted pursuant to Item (1).

B. The P&Z shall not review or consider any amendment submitted concurrently and in conjunction with the filing of a Development of Regional Impact project related application consistent with FS 163 and 380.

C. P&Z Findings: In the public hearing for the amendment(s), the P&Z shall review the Growth Services Department staff report, receive input provided by the applicant as applicable, receive public input regarding the amendment, and consider the amendment(s) in regards to the following findings:

(1) If granting the amendment is compatible with land uses in the surrounding area for amendments which apply to specific real property in order to change that property's land use designation as depicted on the Marion County Future Land Use Map Series Map 1, Marion County 2035 Future Land Use.

(2) If granting the amendment will not adversely affect the public interest,

(3) If granting the amendment is consistent with the Marion County Comprehensive Plan, and

(4) If granting the amendment is consistent with FS 163.

D. P&Z Action

(1) The P&Z shall act on one of the following motions effecting a recommendation for the amendment(s) in regard to Items C (1)-(4), as applicable, as follows:

(a) A recommendation for approval shall be provided in a written form and may be accompanied by reasons for the recommendation of approval.

(b) A recommendation for denial shall be provided in a written form and shall be accompanied by reasons for the recommendation of denial.

(c) In the event the Commission action results in a tie vote, the Commission may deem its consideration of the amendment complete and the amendment shall proceed to its subsequent consideration(s) without a formal recommendation.

(2) In the event the applicant, for any reason, does not appear before for the P&Z at the time the amendment(s) undergoes consideration and action, the P&Z may proceed with consideration and action regarding the amendment(s). It is the applicant's responsibility and obligation to ensure representation is provided before the P&Z.

(3) In the event no member of the public participates in the public comment portion of the public hearing, the P&Z may proceed with consideration and action regarding the amendment(s), and the P&Z is not obligated to determine the lack of participation is a form of support or disfavor in regard to the amendment(s).

E. The P&Z action and its recommendation are not classified as a final action or the equivalent of a final development order. An applicant may request reconsideration of an amendment(s) by the P&Z; however, the P&Z action and recommendation is considered complete as any functional appeal is the responsibility of the Board as provided for in Sections 3.5.5 and/or 3.5.6.

Sec. 3.5.5 Board of County Commissioners transmittal

A. Meetings.

(1) The Board shall hold a public hearing to consider a Large Scale Amendment(s) to the Marion County Comprehensive Plan as set forth in FS 163 and 380. Due public notice shall be provided for the public hearing consistent with the provisions of FS 163 and 125, and Article 1, Division 3.

(2) The Board may conduct a workshop to discuss the amendment(s) prior to the public hearing(s) subject to the workshop notice requirement(s) established by the Board. Any workshop discussion by the Board shall not constitute a determination regarding the amendment(s) nor shall it be considered to serve as or set precedent for the public hearing consideration to be conducted pursuant to Item (1).

B. The Board shall review and consider for transmittal an amendment(s) submitted concurrently and in conjunction with the filing of a Development of Regional Impact project related application consistent with FS 163 and 380.

C. Board Findings: In the public hearing for the amendment(s), the Board shall review the Growth Services Department staff report, review the findings and recommendation of the P&Z, receive input provided by the applicant as applicable, receive public input regarding the amendment, and consider the amendment(s) in regards to the following findings:

(1) If granting the amendment is compatible with land uses in the surrounding area for amendments which apply to specific real property in order to change that property's land use designation as depicted on the Marion County Future Land Use Map Series Map 1, Marion County 2035 Future Land Use.

(2) If granting the amendment will not adversely affect the public interest,

(3) If granting the amendment is consistent with the Marion County Comprehensive Plan, and

(4) If granting the amendment is consistent with FS 163,

D. Board of County Commissioners Transmittal Action

(1) The Board shall act on one of the following motions effecting a determination for the amendment(s) in regard to transmitting the amendment(s) to the DEO in regard to Items C (1)-

(4), as follows:

(a) Motion to approve transmitting the amendment(s) to DEO for agency review with said motion provided in a written form which may be accompanied by reasons for the recommendation of transmittal.

(b) Motion to deny transmitting the amendment(s) to DEO for agency review with said motion provided in a written form and shall be accompanied by reasons for the recommendation of denial.

(c) Tie Vote.

1. If the vote of the Board results in a tie vote, the tie vote shall serve as a denial of the amendment(s) as the motion did not achieve a majority vote of the voting members. For the purposes of a denial resulting from a tie vote, the Board shall provide supportive findings of the effective denial as provided in Items C (1)-(4).

2. The Board may act to continue the amendment(s) consideration to the next Board public hearing or another date and time designated by the Board; however the Board is under no obligation to continue the amendment(s) consideration.

(2) In the event the applicant, for any reason, does not appear before the Board at the time the amendment(s) undergoes consideration and action, the Board may proceed with consideration and action regarding the amendment(s). It is the applicant's responsibility and obligation to ensure representation is provided before the Board.

(3) In the event no member of the public participates in the public comment portion of the public hearing, the Board may proceed with consideration and action regarding the amendment(s), and the Commissioners is not obligated to determine the lack of participation is a form of support or disfavor in regard to the amendment(s).

E. Denial and appeal.

(1) An appeal of a Board vote to approve or deny the transmittal of an amendment(s) to DEO for agency review shall be in accordance with Article 2.

(2) An applicant for an amendment(s) subject to a Board vote to deny transmittal of the amendment(s) may elect to enter the Alternative Dispute Resolution as set forth in FS 718.1255. In the event an applicant files for Alternative Dispute Resolution for an amendment(s), the appeal process initiated by Item (1) shall be held in abeyance as provided in FS 120 and 718.

(3) When the Board has denied an application for an amendment(s), no applicant shall submit an application for amendment for any portion or all of the same property for a period of 12 months from the date of denial unless the property is incorporated or annexed.

F. Action by the Board to transmit an amendment(s) to DEO for agency review is not classified as a final action or the equivalent of a final development order. An applicant may request reconsideration of an amendment(s) by the Board; however, an affirmative Board action is subject to final Board action and consideration as provided for in Section 3.5.6.

Sec. 3.5.6 Board of County Commissioners adoption.

A. Meetings.

(1) The Board shall hold a public hearing to consider each amendment(s) to the Marion County Comprehensive Plan as set forth in FS 163 and 380. Due public notice shall be provided for the public hearing consistent with the provisions of FS 163 and 125, and Article 1, Division 3.

(2) The Board may conduct a workshop to discuss the amendment(s) prior to the public hearing(s) subject to the workshop notice requirement(s) established by the Board. Any workshop discussion by the Board shall not constitute a determination regarding the amendment(s) nor shall it be considered to serve as or set precedent for the public hearing consideration to be

conducted pursuant to Item (1).

B. Board Findings: In the public hearing for the amendment(s), the Board shall review the Growth Services Department staff report, review the findings and recommendation of the P&Z, review any comments received from state, regional, and district related agencies, receive input provided by the applicant as applicable, receive public input regarding the amendment, and consider the amendment(s) in regards to the following findings:

(1) If granting the amendment is compatible with land uses in the surrounding area for amendments which apply to specific real property in order to change that property's land use designation as depicted on the Marion County Future Land Use Map Series Map 1, Marion County 2035 Future Land Use.

(2) If granting the amendment will not adversely affect the public interest,

(3) If granting the amendment is consistent with the Marion County Comprehensive Plan, and

(4) If granting the amendment is consistent with FS 163.

C. Board of County Commissioners Adoption Action

(1) The Board shall act on one of the following motions effecting a determination for the amendment(s) in regard to adopting the amendment(s) to the Marion County Comprehensive Plan in regard to Items B (1)-(4), as follows:

(a) Motion to adopt the amendment(s) with said motion provided in a written form which may be accompanied by reasons for the recommendation of transmittal.

(b) Motion to deny adopting the amendment(s) with said motion provided in a written form and shall be accompanied by reasons for the recommendation of denial.

(c) Tie Vote.

1. If the vote of the Board results in a tie vote, the tie vote shall serve as a denial to adopt the amendment(s) as the motion did not achieve a majority vote of the voting members. For the purposes of a denial resulting from a tie vote, the Board shall provide supportive findings of the effective denial as provided in Items B (1)-(4).

2. The Board may act to continue the amendment(s) consideration to the next Board public hearing or another date and time designated by the Board; however the Board is under no obligation to continue the amendment(s) consideration.

(2) In the event the applicant, for any reason, does not appear before for the Board at the time the amendment(s) undergoes consideration and action, the Board may proceed with consideration and action regarding the amendment(s). It is the applicant's responsibility and obligation to ensure representation is provided before the Board.

(3) In the event no member of the public participates in the public comment portion of the public hearing, the Board may proceed with consideration and action regarding the amendment(s), and the Commissioners is not obligated to determine the lack of participation is a form of support or disfavor in regard to the amendment(s).

D. Denial and appeal.

(1) An appeal of a Board vote to approve or deny the adoption of an amendment(s) to DEO for agency review shall be in accordance with Article 2 and/or FS 120 and 163.

(2) An applicant for an amendment(s) subject to a Board vote to deny adoption of the amendment(s) may elect to enter the Alternative Dispute Resolution as set forth in FS 718.1255. In the event an applicant files for Alternative Dispute Resolution for an amendment(s), the appeal process initiated by Item (1) shall be held in abeyance as provided in FS 120 and 718.

(3) When the Board has denied an application for an amendment(s), no applicant shall submit an application for amendment for any portion or all of the same property for a period of 12 months

from the date of denial unless the property is incorporated or annexed.

E. Adoption of an amendment(s) the Marion County Comprehensive Plan by the Board shall serve as a final action in regards to amending the Marion County Comprehensive Plan; however the adoption shall not be classified as a final or local development order.

Article 4 Zoning

Division 1 Administration and enforcement

Sec. 4.1.1 Administrative Official. The "Planning/Zoning Manager" shall be designated by the Board to interpret and administer the zoning regulations of Marion County. The Planning/Zoning Manager may request the assistance of any appropriate officer or agency of the County. He shall promptly refer all complaints or violations to the Code Enforcement Division. If he finds that any of the provisions of these zoning regulations are being violated, he shall notify in writing the Code Enforcement Division indicating the nature of the violation and the appropriate section of the Code. The Planning/Zoning Manager shall maintain written records of all official actions of his office with relation to interpretation and of all violations discovered.

Sec. 4.1.2 Fees. The Board of County Commissioners shall establish by resolution all fees associated with this Article, and no request shall be processed or accepted by the Planning/Zoning Manager until the required fee has been paid in full.

Sec. 4.1.3 Violations. Nothing herein contained shall prevent the Code Enforcement Division or the Board from taking such other lawful action as is necessary to remedy any violation.

Sec. 4.1.4 General provisions and regulations.

A. Conformity with Code. No building or structure, or part thereof, shall hereafter be erected, constructed, reconstructed or altered and no existing use, new use, or change of use of any building, structure or land or part thereof, shall be made or continued except in conformity with the provisions of this Code.

B. Modification of lots or structures. No lot, or any structure thereon, shall be modified in any way which will not conform to the applicable zoning classification regulations, except:

(1) Where the Board of Adjustment, within its authority, grants a variance; or

(2) Where a portion of property has been acquired by a governmental agency that, by law, is exempt from these regulations

(3) Non-conforming lots in zoning classifications R-1, R-2, R-3, & R-4 may be developed with a lot width of 75 feet, and a minimum of 7,500 feet of buildable area, and shall comply with Marion County Comprehensive Plan Appendix A-4.2 density requirement of one single family residence and as set forth in Section 4.3.2. The Planning/Zoning Manager may issue a waiver of the required lot width and buildable area requirements in the above zoning classifications where the lot width is less than 75 feet, and it is impossible or impracticable to increase the lot width and buildable area.

C. Minimum lot access. Every lot, parcel, tract or combination thereof upon which a structure is hereafter erected shall have a minimum access of 40 feet wide to a street.

D. Oversight or error. No oversight or error on the part of the Planning/Zoning Manager, his assistants, staff, or any official or employee of Marion County shall legalize, authorize or excuse the violation of any of the provisions of this Code.

E. Interpretation. In their interpretation and application, the provisions of this Code shall be held to be minimum requirements, adopted for the promotion of the public health, safety, or general welfare. When the requirements of any other regulation or ordinance are in conflict herewith, the most restrictive or that imposing the higher standards shall govern unless otherwise specifically provided.

F. Zoning classification boundary extension. For purposes of determining zoning classification boundaries after vacation or abrogation of a plat, right-of-way, street, or other property dedicated

or deeded to the public or County, the zoning classification applicable to the property abutting on either side of the property vacated or abrogated shall, after vacation or abrogation, be deemed to extend to the centerline of such vacated or abrogated right-of-way, street, or other property.

G. Uses not listed:

(1) Uses Not Listed. The listing of permitted uses in a zoning classification is not meant to be all inclusive. Uses not specifically permitted by this Code in any zoning classification shall be reviewed by the Planning/Zoning Manager in accordance with the provisions of the following paragraph and may require a Special Use Permit (SUP). SUP application procedures shall conform to the provisions of Article 2 of this Code.

(2) Criteria for reviewing uses not listed. Upon application for a use not listed herein, the Planning/Zoning Manager shall determine whether or not the use may be allowed in the specific zoning classification requested as a permitted use and if so whether it will require a SUP.

(3) For reviewing unlisted uses the Standard Industrial Classification (SIC) Manual shall be used to determine the general classification of uses. Other factors which may be considered shall be traffic generation volume, type of traffic attracted to and generated by the site, parking requirements, compatibility with surrounding land uses, noise, lighting and visual impacts, hours of operation, and intensity of use. The Planning/Zoning Manager may, after review of the criteria herein, determine that certain uses are prohibited uses which shall not be allowed in particular zoning classifications. In the event that a use is determined to be a prohibited use, record of the reasons given for that decision shall be kept on file and shall be used as a guide for subsequent use determinations.

(4) Appeals of decisions on unlisted uses. Decisions on unlisted uses by the Planning/Zoning Manager are considered interpretations and may be appealed to the Board of Adjustment in conformance with the provisions of Article 2.

H. Zoning maps. The Planning/Zoning Manager shall maintain and file in the Growth Services Department office, true and correct copies of all official Marion County Zoning Maps, which shall be updated periodically to reflect all approved zoning changes.

I. Setback exemptions. The following structures shall be exempt from the setback requirements of this Code: mailboxes, lawn posts, flag poles, bird houses, utility poles, fences, paper boxes, private culverts, driveways, utility piping, pad-mount transformers, telephone and cable company connection boxes, sidewalks and walkways. Septic tanks are exempt to within five feet of any property line; wells are exempt to within eight feet of any property line; and in all cases DOH approval is required. Other exemptions may be allowed if approved in writing by the Planning/Zoning Manager.

J. Cross Florida Greenway. All structures on lands adjacent to the Cross Florida Greenway shall be setback a minimum of 50 feet from the Greenway. Exceptions are residentially zoned lots, stormwater management facilities and those facilities which further the conservation and recreational use of the Greenway. A variance to this setback requirement may be requested when a demonstrated hardship precludes the development of the property. The applicant has the burden of proving the existence of a genuine hardship.

K. Prescriptive easements. After June 18, 1992 all new prescriptive road easements, if applicable, shall be established by Court Order prior to issuance of a Building Permit.

L. Uncompleted structures. Any building or structure which has not passed a final inspection or received a certificate of occupancy within 12 months after the date of first inspection shall be classified as an unfinished structure unless said time period has been extended by the Building Manager. Construction shall be permitted to recommence under such conditions and for such period as may be determined as reasonable by the Board of Adjustment based on conformity with, and promotion of, the spirit and purpose of this Code and the Building Code. The Board of Adjustment

may order removal of any building or structure not in compliance with any provision of this Code or condition imposed by the Board of Adjustment.

M. Double frontage. On corner tracts or through tracts, the required front yard shall be determined by the property owner. On corner lots and tracts, the remaining street frontage shall become a side yard. On residential corner lots the side setback is fifteen feet, however, the Planning/Zoning Manager is authorized to reduce the side yard setback to a minimum of 8 feet, provided the reduction will not create site triangle or visibility problems from roads bordering such lots. This does not apply to RE, Residential Estate zoning classification.

N. Height limit exemptions. Chimneys, stacks, tanks, church steeples and roof structures used only for mechanical or aesthetic purposes may exceed the permitted height in any zoning classification up to a maximum height of 50 feet above finished grade of the supporting structure. Structures exceeding 50 feet above finished grade of the supporting structure shall be approved by SUP or PUD. Radio, TV or wireless communication towers exceeding 50 feet above finished grade shall only be approved in accordance with Section 4.3.27.

O. Use of residentially zoned property for access. No land which is residentially-zoned shall be used for driveway, walkway or access purposes to any land which is zoned for commercial, industrial or institutional use.

P. The following special services are allowed in any zoning classification as a permitted accessory use:

Cable lines, either above or below ground

Electrical supply lines, either above or below ground including pad mount transformers

Gas supply lines, low pressure, except where such permits are pre-empted by state or federal regulations

Sewerage collection systems including lift stations

Sewerage treatment plants with a flow of less than 5,000 gallons per day and appurtenant effluent disposal facilities

Water supply wells, treatment facilities, and storage tanks serving fewer than 15 service connections, or commercial or industrial buildings or developments which meet the requirements of Article 6.?.?.

Q. The following services shall obtain a SUP:

Control buildings

Gas meter facility, except where such permits are pre-empted by state or federal regulations

Gas supply lines, high pressure, except where such permits are pre-empted by state or federal regulations

Landfill, construction and demolition

Sewage treatment plants with an inflow exceeding 5,000 gallons per day

Sprayfields or other type of effluent disposal area when application rate exceeds 5,000 gallons per day, if allowed by law

Treatment facility for residuals

Utility company service yards

Water supply, treatment and storage facilities which serve 15 or more service connections, or commercial or industrial buildings which are required by the building code to have fire sprinkler systems

Wellfields

R. Communication, transmitter and broadcast towers and accessory structures will be approved only by SUP or by Administrative Permit when allowed by Section 4.3.27 in all zoning classifications.

Sec. 4.1.5 Varying design standards.

A. Design standards may be varied by the Board pursuant to Article 6.

B. The Planning/Zoning Manager is authorized to reduce the tract width requirement in all residential and agricultural zoning classifications, when placement of the structure otherwise complies with the front, side and rear yard setbacks and the reduction is necessary due to an irregularly shaped lot.

C. Where existing parcels or tracts of record do not abut for at least 40 feet on a street; or where the setback requirements set forth herein preclude development of the parcel or tract; and where the parcel or tract could be developed in conformance with the zoning code in effect prior to the adoption of this Code; the prior requirements shall prevail.

D. Terminology. Lot, parcel or tract of record may be used interchangeably herein.

Division 2 Zoning Classification

Sec. 4.2.1 In order to regulate the location, height, bulk and size of buildings and other structures; the percentage of the lot, tract, or parcel which may be occupied; the size of lots, tracts or parcels, courts and green spaces; the density and distribution of population; the location and uses of land, buildings and structures for trade, industry, residential, recreation, public activities or other purposes; the unincorporated area of Marion County shall be zoned according to Table 4.2.1-1 and subsequent sections:

TABLE 4.2.1-1 Zoning and Corresponding Land Use Designations

Zoning Classification	Intent and Purpose
	URBAN AREA
R-E Residential Estate	The Residential Estate Classification provides for low density urban residential development with large lot home sites and certain agricultural uses which are compatible with residential development.
R-1 Single Family Dwelling	The Single Family Dwelling Classification is intended to provide areas for medium density residential development.
R-2 One- and Two-Family Dwelling	The One- and Two-Family Dwelling Classification is intended to provide areas for medium and high density residential development and includes both one-family and two-family dwellings (including two separate dwellings on one lot or tract).
R-3 Multi-Family Dwelling	The Multi-Family Dwelling Classification is intended to provide for high density residential development, including multi-family dwellings in areas served by public or private water and sewer facilities.
R-4 Residential Mixed Use	The Residential Mixed Use Classification is intended to provide for medium density, single family or two-family, residential development utilizing a mix of single or double wide mobile or manufactured homes and conventional construction homes.
MH Manufactured Housing	The Manufactured Housing Classification is intended to provide residential areas for manufactured housing development.
P-MH Mobile Home Park	The Mobile Home Park Classification is intended to provide tracts of land designed to create a sense of community and maintained or used for the purpose of renting individual sites for mobile homes.

Zoning Classification	Intent and Purpose
P-RV Recreational Vehicle Park	The Recreational Vehicle Park Classification is intended to provide areas for the rental of spaces for travel trailers, mobile homes, manufactured homes, park models, camper and tent vehicles.
R-O Residential Office	The Residential Office Zoning Classification is intended to provide areas where residential uses and certain office uses which are compatible with residential development may be allowed to coexist. This normally occurs through the conversion of single-family dwellings to specific office uses. This zoning classification is to be considered a restricted commercial zoning classification.
A-1 General Agriculture (Transitional)	The General Agriculture Classification is intended to preserve agriculture as the primary use. This classification in the Urban Expansion Area may be used for agriculture until such time as it is rezoned to another permitted classification.
B-1 Neighborhood Business	The Neighborhood Business Classification is intended to provide for neighborhood retail and shopping facilities that would be appropriate with surrounding residential areas.
B-2 Community Business	The Community Business Classification provides for the shopping and limited service needs of several neighborhoods, a community, or a substantial land area. Retail stores are intended to include general merchandise, fashion, durable goods, and personal services.
B-3 Specialty Business	The Specialty Business zoning classification is intended to provide areas for the development of special commercial facilities requiring large parcels of land and which require access by motor vehicles of all types including tractor-trailer units.
B-4 Regional Business	The Regional Business Classification is intended to create a zoning classification to provide for the development of regional shopping centers; to establish and maintain intensive commercial activities and specialized service establishments that require centralized locations within a large service area; to provide a full range of merchandise and services usually obtainable in major department stores and their complimentary specialty shops; and to permit the development of major financial and administrative complexes that may serve a region and require a conspicuous and accessible location convenient for motorists.
B-5 Heavy Business	The Heavy Business Classification is intended to provide for those uses such as retail or wholesale, repair and service, which may require larger parcels for the outside storage of materials or equipment in inventory or waiting repair. Businesses are intended to serve clients and customers from a regional area providing access for large delivery trucks.
I-C Industrial Complex	The Industrial Complex Zone Classification is intended to provide for the development of integrated wholesale and special retail businesses which require office, research and development, manufacturing, repair, service, sales, warehouse storage and distribution facilities. These businesses may require larger parcels for the outside storage of materials or equipment in inventory or awaiting repair.
M-1 Light Industrial	Light Industrial Classification is intended to provide land for primarily the manufacture of small articles and products which do not involve the use of any materials, processes, or machinery or production of a product likely to be detrimental to nearby or adjacent residential or business property.

Zoning Classification	Intent and Purpose
M-2 Heavy Industrial	The Heavy Industrial Classification is intended to provide for those manufacturing activities which create some undesirable effects and are not compatible with other zoning classifications.
	RURAL AREA
A-1 General Agriculture	The General Agriculture Classification is intended to preserve agriculture as the primary use. This classification in the Urban Area may be used for agriculture until such time as it is rezoned to another permitted classification.
A-2 Improved Agriculture	The Improved Agriculture Classification is intended to provide for general farming and animal husbandry with accessory uses, involving substantial improvement and development, and for which certain restrictive zoning is necessary to minimize conflicts and protect the character of the area.
A-3 Residential Agricultural Estate	The Residential Agricultural Estate Classification is intended to provide for areas whose present or prospective use is animal husbandry with attendant agricultural and accessory uses; providing a rural or farm atmosphere in which single family home ownership may be combined with small parcel development and where the growing of supplemental food supplies for families will be encouraged. It is also intended to permit a reasonable use of the property while protecting prime agricultural or natural areas from urban encroachment and preventing rapid expansion of demands on public facilities such as schools, roads, water, and sewer lines.
RR-1 Rural Residential	The Rural Residential Classification provides for rural residential development with home sites and certain agricultural uses which are compatible with rural residential development. All residentially zoned parcels of record located in Rural Lands are eligible for rezoning to this classification. Agriculturally zoned parcels shall not be rezoned to this zoning classification.
RAC Rural Activity Center	The Rural Activity Center classification is intended to provide for the shopping and limited services needed by residents in the rural area.
RC-1 Rural Commercial	The Rural Commercial Classification is intended to provide for agricultural related commercial uses that would be appropriate on Rural Lands not located in a Rural Activity Center.
RI Rural Industrial	The Rural Industrial Classification is intended to provide land for agricultural related research, agricultural assembly operations, or agricultural manufacturing uses.

Zoning Classification	Intent and Purpose
	URBAN OR RURAL AREA
PUD Planned Unit Development	The Planned Unit Development Classification is intended to encourage the development of land as a planned residential, commercial or industrial development complex or as a planned mixed-use development; to encourage flexible and creative concepts of site planning which will preserve the natural amenities of the land by allowing an appreciable amount of land for scenic and functional open space; provide for an efficient use of land resulting in a smaller network of utilities and streets, thereby lowering development and housing costs; and provide for a more desirable environment than would be possible through the strict application of minimum zoning requirements. It is further the intent of this Code that Planned Unit Developments shall be designed to permit the development of various size parcels ranging from small, cluster developments to entire new mixed-use communities. The development shall provide for the efficient use of public facilities and services, prevent traffic congestion, provide a stable environmental character compatible with surrounding land uses and preserve the integrity of the surrounding areas within which they are located.
RR Rural Resort	The Recreational Resort Classification is intended to provide for commercial and institutional recreational development in rural or urban areas adjacent to or within the Ocala National Forest or other natural reservation areas including but not limited to the Silver River State Park, the Florida Greenway, the Rainbow River Park or on lands fronting on lakes or rivers. The uses allowed in this classification are water related, water dependent, or natural resource dependent and are necessary for the support of the guests and the immediate population.
G-U Government Use	The Governmental Use Classification is intended to apply to those areas where the only activities conducted are those of the U. S. Government, State of Florida, Marion County Board of Commissioners, Marion County School Board or incorporated communities in Marion County.

Sec. 4.2.2 Residential Zoning Classifications

A. Contained in this section are the allowed land uses, building and lot standards (including minimum setbacks) and other general requirements specified for these zoning classifications.

B. These zoning classifications may apply for sites subject to the density exceptions provisions in Section 4.3.2.

TABLE 4.2.2-1 Residential Classification Uses

PERMITTED USE (P) , SPECIAL USE (S)	RE	R-1	R-2	R-3	R-4	MH	PMH	RR-1
Adult day care				S	P			
Agricultural crop production	P	P	P	P	P	P	P	P
Art gallery	S	S	S	S	S	S		
Cemetery, crematory, mausoleum	S	S	S	S	S	S		
Child day care center							P	
Church, Place of Worship	P	P	P	P	P	P		S
Community garage				P				
Community residential home with seven or more residents	S	S	S	S	S			

PERMITTED USE (P) , SPECIAL USE (S)	RE	R-1	R-2	R-3	R-4	MH	PMH	RR-1
Community residential home with six or less residents (Medium density areas only in R-3)	P	P	P	P	P			
Convalescent home, adult congregate living facility				P	P			
Gas meter facility, except where such permits are pre-empted by state or federal regulations	S	S	S	S	S	S	S	
Gas supply lines, high pressure, except where such permits are pre-empted by state or federal regulations	S	S	S	S	S	S	S	
Hospital				S	P			
Keeping of pot-bellied pigs as pets	S	S	S	S	S	S		S
Library	S	S	S	S	S	S		
Low power radio station		S						
Maintenance and service buildings							P	
Management and administration center							P	
Manufactured buildings (DCA approved residential units)	P	P	P	P	P	P	P	P
Manufactured homes	S		S	S	P	P	P	P
Medical or dental office	S	S	S	S	S	S		
Mobile Home	S				P	P	P	P
Multi-family dwellings				P				
Museum	P	S	S	S	S	S		
Orphanage				P	P			
Parking of commercial vehicles in excess of 10,000 lbs.	S	S	S	S	S	S	S	S
Pigeon lofts meeting the requirements of Section 5.5.31., on lots one acre or larger	P	P	P	P	P	S	S	P
Plant nursery, wholesale	S	S	S	S	S	S		
Private clubs and community centers.	S			P	P		P	
Professional office	S	S	S	S	S	S		
Public lodging establishments including resort condominium, non-transient apartment, transient apartment, rooming house, bed and breakfast inn or resort dwelling	S	S	S	P	S	S	S	S
Public or private golf course or tennis facility which may include a country club or clubhouse	P	P	P	P	S	P		
Public park, playground or other public recreational use	P	P	P	P	P	P		P
Recreation building	S		S	S				
Rehabilitation center, physical				P	P			

PERMITTED USE (P) , SPECIAL USE (S)	RE	R-1	R-2	R-3	R-4	MH	PMH	RR-1
School, accredited, public, private or parochial	S	S	S	P	P	S		
Sewage treatment plants with an inflow exceeding 5,000 gallons per day	S	S	S	S	S	S	S	
Single family and two-family dwellings			P	P	P			
Single family dwelling	P	P	P	P	P	P		P
Sprayfields or other type of effluent disposal area when application rate exceeds 5,000 gallons per day, if allowed by law	S	S	S	S	S	S	S	S
Water supply, treatment and storage facilities which serve 15 or more service connections, or commercial or industrial buildings which are required by the building code to have fire sprinkler systems	S	S	S	S	S	S	S	
Wellfields	S	S	S	S	S	S	S	
ACCESSORY USES								
Private building for housing dogs, cats or similar, small domesticated pets	P	P	P	P	P	P	P	P
Horses or cattle for personal use. (See special lot area and number requirements in 3.b. below.)	P	S	S	S	S	S	S	P
One family/guest cottage/apartment. Refer to Sub-section 5.5.29	P	P				P		P
Poultry for personal use, limit 12		S	S	S	S			P
Private greenhouse or non-commercial (no retail sales) conservatory for plants or flowers	P							P

C. General requirements for all residential classifications:

(1) Movable awnings, may not project over three feet into a required setback.

(2) No structure may be erected, placed upon, or extend over any easement unless approved in writing by the person or entity holding said easement.

(3) All setbacks shall be measured from the foundation or wall if no foundation is present; however, eaves, roof overhangs, pilasters, chimneys and fireplaces may protrude two feet into the setback.

(4) Accessory structures shall be located in the rear or side yard provided required setbacks are observed.

(5) Accessory use aircraft hangars in approved fly-in communities shall be permitted and include a maximum height of 30 feet.

D. General requirements in MH Zoning: Manufactured Housing dwelling units shall conform to the requirements of the National Manufactured Home Construction and Safety Standards (HUD Code). These units shall also comply, if applicable, with Section 5.5.11, Used Manufactured Home and Mobile Home and Park Trailer of this Code.

E. General requirements in RR-1 Zoning, RE Zoning and in any zoning district permitted by special use: For the keeping of horses, the minimum square footage of pasture area not including the dwelling shall be 9,000 square feet for the first horse and 6,000 square feet for each additional horse. The total number of horses shall not exceed four per acre, except foals which may be kept until weaned. See ESOZ requirements for horses in that zone.

F. General requirements in P-MH:

(1) A park shall consist of two or more units.

(2) Outdoor ground and building lighting shall not cast direct light on offsite dwellings.

(3) Under skirting shall be required.

(4) Mobile homes shall be a minimum of ten feet in width.

(5) Mobile homes may have attached carports (12' × 24' minimum), and any patio awnings shall be attached to the structure (Minimum size shall be 10' × 20'). Any utility rooms (8' × 8' minimum) shall be attached to the structure.

(6) Under skirting, patio awnings, carports and utility rooms shall be compatible with the design and type of mobile home to which they are attached.

G. Zoning Lot and Building Standards shall conform to Table 4.2.2-2:

TABLE 4.2.2-2 Residential Classifications Standards

Zoning Classification	RE	R-1	R-2	R-3	R-4	MH	PMH	RR-1
Maximum Height in Feet								
Main Structure	40	40	40	50	40 Max Two Story	40 Max Two Story	40	40
Accessory Use		20 Max Two Story	20 Max Two Story		20 Max Two Story		20	
Minimum Tract/Lot Area in Square Feet								
Single Family	32,670	10,000	10,000	7,500	7,500	10,000	4,000	Vested and /or FLUE Appendix A-4.2/Section 4/3/2
Two Family			12,500	12,500	12,500			
Three or More Family				12,500				
Minimum Tract/Lot Width in Feet								
Single Family	150	85	85	85	75	85	45	Existing
Two Family			100	100	100			

Zoning Classification	RE	R-1	R-2	R-3	R-4	MH	PMH	RR-1
Three or more Family				100				
Maximum Density in Units Per Acre								
Single Family	1	4	4	4	4	4	8	Vested and /or Appendix A-4.2/Section 4.3.2
Two Family			6	6	4			
Multi-Family				8				
Medium High Density				8-12				
Multi-Family High Density				12-16				
Setback, Feet								
Front	25	25	25	25	25	25	15	25
Rear	25	25	15	25	25	25	8	25
Side	25	8	8	8	8	8	10	8
Accessory	All 25	Side 8 Rear 8	Side 8 Rear 8	Side 8 Rear 8	Side 8 Rear 8	Side 8 Rear 8	Side 5 Rear 5	Front 25 Side 8 Rear 8
Setbacks in Mobile Home Parks designed and constructed prior to June 11, 1992: front, rear and side – eight feet for main structures. Accessory use structures setbacks from rear and side is five feet.								
See Environmentally Sensitive Overlay Zone (ESOZ) in Article 5 for alternative lot and building standards for properties within that zone.								
Where the setback requirements set forth herein preclude development of the parcel or tract; and where the parcel or tract could be developed in conformance with the zoning code in effect prior to the adoption of this Code; the prior requirements shall prevail.								

Sec. 4.2.3 Agricultural Zoning Classifications

A. Contained in this section are the allowed land uses, building and lot standards (including minimum setbacks) and other general requirements specified for these zoning classifications.

B. These zoning classifications may apply for sites subject to the density exceptions provisions in Section 4.3.2.

Table 4.2.3-1 Agricultural Classification Uses

PERMITTED USE (P) , SPECIAL USE (S)	A-1	A-2	A-3
General agricultural use such as aquaculture, agricultural crop production, agricultural production of livestock and forestry, and including the keeping and raising of ratites such as ostriches and emus	P		
General agricultural crop production, agricultural production of livestock including horses and cattle including the keeping and raising of ratites such as		P	

PERMITTED USE (P) , SPECIAL USE (S)	A-1	A-2	A-3
ostriches and emus. This section excludes aquaculture and limits the number of poultry to 25.			
General farming including grains, fruit, vegetables, grass and hay, and the keeping and raising of horses or cattle including the keeping and raising of ratites such as ostriches and emus. This section excludes aquaculture and limits the number of poultry to 12.			P
Airport (private)	S	S	
Aviaries	S	S	S
Bed and breakfast inn	S	S	S
Beekeeping operations	P		
Cemetery, mausoleum (private)	S		
Church	S	S	S
Feedlots, cattle, hog, lamb, etc	S	S	
Gas meter facility, except where such permits are pre-empted by state and federal regulations	S	S	S
Gas supply lines, high pressure, except where such permits are pre- empted by state or federal regulations	S	S	S
Greenhouse and plant nursery including both wholesale and retail, provided products sold are raised on premises	P	P	P
Kennel	S		
Landfill, construction and demolition	S		
Motorized Vehicle Racetrack or Practice Facilities shall be defined as: Motorized Vehicle Racetrack or Practice Facility - a place where ATV's, Motocross Bikes, Go Carts, Off Road Vehicles, or any similar vehicles, gather to compete against each other or against time on a tract of land or course constructed or designed for such purpose; A place to train, develop form, techniques or other skills related to competition	S	S	S
Nursery school	S	S	
One family/guest cottage/apartment Refer to Subsection 5.5.29	P	P	P
Ornamental horticulture, floriculture and nursery products, wholesale and retail	P		
Parking of commercial vehicles in excess of 10,000 lbs	S	S	S
Pigeon lofts meeting the requirements of Section 5.5.31	P	P	P
Pot bellied pigs as pets	P	P	S
Poultry hatcheries and farms, sod farms and fish hatcheries	P		
Poultry raising, more than 25	P	S	
Poultry raising, more than 12	P	P	S
Public park, or other public recreational use or building		P	P
Race track, non-motorized, non-commercial for training only	P	P	P
Riding academy, dude ranch	S	P	
Shooting range	S	S	S
School, accredited public, private, or parochial	S	S	S
Sewage treatment plants with an inflow exceeding 5,000 gallons per day	S	S	S
Single family dwellings and mobile or manufactured homes	P	P	P
Specialty animals	S		

PERMITTED USE (P) , SPECIAL USE (S)	A-1	A-2	A-3
Sprayfields or other type of effluent disposal area when application rate exceeds 5,000 gallons per day, if allowed by law	S		S
Storage of explosives	S		
The sale of hay, refer to Sub-Section 4h	P	P	
Transportation services solely related to the transport of horses and livestock	S		S
Treatment facility for wastewater residuals	S	S	
Veterinary office, clinic or hospital outside kennel by SUP	P	P	P
Water supply, treatment and storage facilities which serve 15 or more service connections, or commercial or industrial buildings which are required by the building code to have fire sprinkler systems	S	S	S
Wellfields	S	S	S

C. General Requirements

(1) All setbacks shall be measured from the foundation or wall; however, eaves, roof overhangs, pilasters, chimneys and fireplaces may protrude two and one-half feet into a required setback.

(2) No structure or building may be erected, placed upon or extend over any easement unless approved in writing by the person or entity holding said easement.

(3) Requirements of the Storage of Manure:

(a) Manure shall not be allowed to accumulate causing a nuisance or hazard to the health, welfare or safety of humans or animals.

(b) The outside storage of manure in piles (two cubic yards or greater) shall not be permitted within 100 feet of any lot line and/or any residence.

(c) Compliance with Article 5 Springs Protection Zone standards.

(4) On legal non-conforming lots or parcels of one acre or less in size or lots up to nine and nine-tenths acres in size, the density per acre limitation for horses, mules, donkeys, sheep, cattle, goats, swine, beefalo and other large farm animals is as follows:

(a) The minimum square footage of contiguous open lot area, not including the dwelling and the garage (either attached or detached) shall be 9,000 square feet for the first animal and 6,000 square feet for each additional animal.

(b) The total number of such animals that may be kept shall not exceed four per acre except offspring which may be kept until weaned.

(5) Outdoor ground and building lighting shall not cast direct light on adjacent properties.

(6) On A-1 zoned parcels residential complexes for agricultural employees are allowed as an accessory use and may be clustered provided central water and sewage facilities are provided. Dwelling units may be conventional construction, manufactured housing, or mobile homes.

(7) Commercial vehicles utilized for transporting agricultural products raised or produced on the A-1 property of the vehicle owner may be parked on the A-1 zoned property.

(8) The sale, either retail or wholesale, of hay, either locally grown or imported from outside the State of Florida, is allowed as an accessory use on a working farm where hay is already produced and sold. This provision is not permitted in the A-3 zoning classification.

D. Zoning Lot and Building Standards:

Table 4.2.3-2 Agricultural Classifications Standards

Zoning Classification	A-1 Feet			A-2 Feet			A-3 Feet			Conditions
	Front	Side	Rear	Front	Side	Rear	Front	Side	Rear	
Buildings or Structures	25	25	25	25	25	25	25	25	25	
Accessory Building Housing Livestock	75	25	25	75	25	25	50	25	25	
Accessory Building Housing Poultry	100	25	25	100	25	25	50	25	25	
Pool Enclosures	25	25	10	25	25	10	25	25	10	
Minimum Tract Width	150			150			150			
Minimum Lot Size	10 AC			10 AC			10 AC			
Density	One dwelling per ten acres			One dwelling per ten acres			One dwelling per ten acres unless parcel qualifies for alternative development standards			Unless qualifies as non-contiguous parcel of record
Height Limitations	50			50			40			Silo shall not exceed 100

Sec. 4.2.4 Commercial Zoning Classification

A. Contained in this section are the allowed land uses, building and lot standards (including minimum setbacks) and other general requirements specified for these zoning classifications.

B. Unless otherwise noted the listed uses shall mean the sale of finished products or units.

Table 4.2.4-1 Commercial Classifications Uses

Commercial Classifications Uses PERMITTED USES/ SPECIAL USES	B-1	B-2	B-3	B-4	B-5	P-RV	RAC	RC-1	RO	RR
Accessory uses and structures such as private recreational facilities including swimming pool, archery range, shuffle board, clubhouse, meeting room, and similar facilities needed to support a resort development						P				P
Adult day care center	P	P		P	P		P		P	
Adult entertainment					S					
Advertising specialties		P		P						

Commercial Classifications Uses PERMITTED USES/ SPECIAL USES	B-1	B-2	B-3	B-4	B-5	P-RV	RAC	RC-1	RO	RR
Agricultural chemical or fertilizer companies retail or wholesale, including application companies				P	P		P	P		
Agricultural credit or loan institutions; agricultural production credit association Agricultural insurance (crop and livestock)	P	P		P	P		P	P		
Agricultural equipment, tools, implements and machinery - sale retail or wholesale and repair			P	P	P		P	P		
Agricultural gypsum, lime, ground limestone, sulfur retail or wholesale					P		S	P		
Agricultural implements				P	P		P	P		
Agricultural uses as an interim use (excluding livestock)	P	P	P	P	P	P	P	P	P	P
Air conditioning, heating and ventilating equipment		P		P	P					
Air conditioning room units, self contained, sales, service and repair		P		P	P					
Airport, general aviation					P					
Amusement parks		S	P	P	P					
Antiques	P	P		P	P		P			
Art gallery	P	P		P	P		P		S	
Art supplies		P		P	P					
Artisan shops and similar service establishments, retail	P	P		P	P		P			
Assembly and fabrication of goods using components which are manufactured elsewhere and brought to this site			P		P		S			
Astrologer, fortune teller	P	P		P	P					
Auction houses (excluding those for animals)			P		P					
Auto detailing, car wash inside building (outside in B-5 only)	P	P		P	P					
Auto repair, except body repair		P		P	P					
Auto repair, except body repair, four bay maximum	P	P		P	P					
Automobile and pick-up truck sales, new or used		S	P	P	P					
Automobile paint and body shop		S		S	P					
Automobile rental		P		P	P					
Automobile, used parts					P					
Automotive parts, new		P		P	P		P			
Awning and canvas, repair			P		P					
Awning sales				P	P					
Bakery (industrial/commercial)		S		S	P					

Commercial Classifications Uses PERMITTED USES/ SPECIAL USES	B-1	B-2	B-3	B-4	B-5	P-RV	RAC	RC-1	RO	RR
Bakery and/or delicatessen	P	P		P	P					
Bank	P	P		P	P		P			
Bar, alcoholic		P		P	P		P			
Barber or beauty shop	P	P		P	P		P		P	
Bed and breakfast inn	S						P			
Bicycles	S	P		P	P					
Blacksmith or farrier shops, retail				P	P		P	P		
Boat yard					P					
Boats and marine motors, sales and service		P		P	P					
Bookbinding					P					
Books and stationery	P	P		P	P					
Bottling plant (non-alcoholic beverages)		S		P	P					
Bowling alley	P	P		P	P					
Bus terminal				P	P					
Business machines and services		P		P	P					
Business offices, such as, but not limited to physicians, insurance, financial services, real estate, farm management and services	P	P		P	P		P		P	
Cabinet or carpentry shop					P					
Camera and photo supplies	P	P		P	P					
Camping equipment	P	P		P	P		P			
Carpet and rug cleaning					P					
Cemetery, crematory, mausoleum		S		S	S				S	
Child care centers	P	P		P	P		P		P	
Church, Places of Worship	S	P	S	P	P	S	S	S	P	S
Clothing	P	P		P	P		P			
Club, private	P	P		P	P				P	
Cold storage locker or plant			P		P		P			
Community residential home with seven or more residents							S		S	
Community residential home with six or less residents							P		P	
Confectionery	P	P		P	P					
Construction equipment sales					P					
Construction or contractor yard		S	P	S	P		P			
Convenience store, gas station, or car wash	P	P	P	P	P		P			
Dance studio	P	P		P	P					
Dental office	P	P		P	P					
Department store	P	P		P	P					
Detective agency	P	P		P	P					
Diaper service				P	P					
Dressmaking	P	P		P	P					

Commercial Classifications Uses PERMITTED USES/ SPECIAL USES	B-1	B-2	B-3	B-4	B-5	P-RV	RAC	RC-1	RO	RR
Drug store	P	P		P	P		P			
Dry cleaning plant					P					
Dry cleaning, pick-up	P	P		P	P					
Employment office		P		P	P					
Farm building construction yard					P		P	P		
Farm equipment, machinery and tractors - new and used, sales, repair, and leasing, retail			P	P	P		P	P		
Farm irrigation equipment - sales, repair, and installation, retail					P		P	P		
Farm produce; sales, packing, crating and shipping facility retail or wholesale					P		P	P		
Farm storage structures; manufacturing, sales, and installation, retail or wholesale				P	P		P	P		
Farm supply store including seed, feed, fertilizer, fencing posts and tack stores					P		P			
Fitness center	P	P		P	P		P			
Florist shop	P	P		P	P		P			
Food catering		P		P	P					
Fruit and vegetable (inside building)		P		P	P		P			
Fuel oil; sales and storage, retail					P		P			
Furniture	P	P		P	P					
Game arcade, coin operated		P		P	P					
Garage, public parking		P		P	P					
Garbage transfer station		S		S	S					
Garden supply	S	P		P	P		P			
Gas meter facility, except where such permits are pre-empted by state or federal regulations	S	S	S	S	S	S	S	S	S	S
Gas supply lines, high pressure, except where such permits are pre-empted by state and federal regulations	S	S	S	S	S	S	S	S	S	S
Gas, bottled			P	P	P	P	P			P
Gasoline sales, bait and tackle sales	P	P	P	P	P		P	P		P
Gift shop	P	P		P	P					
Glass and mirror shop				P	P					
Golf course	P	P		P	P					
Golf course, miniature		P		P	P					
Golf driving range		P		P						
Grain elevator					P			P		
Grocery	P	P		P	P		P			
Grocery store for primary use of residents and their guests						P				P

Commercial Classifications Uses PERMITTED USES/ SPECIAL USES	B-1	B-2	B-3	B-4	B-5	P-RV	RAC	RC-1	RO	RR
Gun shop		P	P	P	P		P	P		
Gymnasium, commercial	P	P		P	P					
Hardware	P	P		P	P			P		
Hatchery, fish or fowl, wholesale					P			P		
Heavy machinery and equipment sales, leasing, rental (new or used) and repair			P		P					
Heliports			P		P					
Hobby supply	P	P		P	P					
Horse trailers and farm wagons - sales, repair, and manufacturing, retail				P	P		P	P		
Horses or cattle, not a sales operation (refer to general requirements)	S	S		S	S		P	S	S	
Hospital	P	P		P	P				S	
Hotel, motel		P	P	P	P					
Household appliance, repair	S	P		P	P					
Household appliances, sales	P	P		P	P					
Household furnishings, sales	P	P		P	P					
Ice cream	P	P		P	P		P			
Ice storage house					P					
Industrial equipment					P					
Insurance office	P	P		P	P				P	
Interior decorator	P	P		P	P				P	
Jewelry	P	P		P	P					
Kennel				P	P					
Laundry, commercial				P	P					
Laundry, commercial plant					P					
Laundry/Laundromats	P	P		P	P	P	P			P
Lawn mowers, power, sales and repair	S	P		P	P					
Leather goods, luggage	P	P		P	P					
Library	P	P		P	P				S	
Linen supply				P	P					
Loan company office	P	P		P	P				P	
Locksmith	P	P		P	P					
Lodge, fraternity, sorority	P	P		P	P				P	
Lumber yards and building material sales		S	P	S	P		P			
Machine shop					P					
Manufacturers representatives offices and warehouses			P		P					
Marina		P		P	P					P
Meat market	P	P		P	P		P			
Medical office	P	P		P	P			P	P	
Medical transport service			P	P	P					

Commercial Classifications Uses PERMITTED USES/ SPECIAL USES	B-1	B-2	B-3	B-4	B-5	P-RV	RAC	RC-1	RO	RR
Milk distributing station			P		P					
Mobile home sales				P	P					
Model home sales lot or model home complex		P		P	P				P	
Monuments or memorials				S	P					
Mortuary				P	P					
Motor freight terminal (truck terminal)			P		P					
Motorcycle sales and service		S	P	P	P					
Moving and storage firms and truck terminals			P		P					
Museum	P	P		P	P				S	
Music school, Music shop	P	P		P	P					
New and used merchandise, outside building, flea market				S	P					
Newspaper printing plant					P					
Night club		P		P	P					
Office furniture and equipment		P		P	P					
Optical instruments	P	P		P	P					
Orphanage	P	P		P	P				P	
Package liquor store		P	P	P	P		P			
Paint and wallpaper		P		P	P					
Painting and varnishing					S					
Pallet repair					S					
Parking lot	P	P	P	P	P					
Parking of commercial vehicles used for the permitted business purposes as an accessory use	P	P	P	P	P		P	P		
Parking of commercial vehicles in excess of 10,000 lbs. not used by permitted business	S	S	P	P	P		S	S	S	
Pawn shop		S		P	P		S			
Pest control agency, supplies		S		P	P					
Pet supply	P	P		P	P		P			
Photographic studio	P	P		P	P				P	
Pipe, concrete, metal, retail or wholesale					P					
Plant nursery, retail	P	P		P	P			P	S	
Plant nursery, landscape contractor's yards				P	P		P			
Plant nursery, wholesale and retail	S	S		P	P			P	S	
Pool room		P		P	P					
Post Office (privately owned & leased facility)		P	P	P	P		P			
Poultry (raising)									S	
Pressing and mending, clothing	P	P		P	P					
Produce (inside building)	S	P		P	P		P	P		
Produce (outside building)		S	S	S	P		P	P		

Commercial Classifications Uses PERMITTED USES/ SPECIAL USES	B-1	B-2	B-3	B-4	B-5	P-RV	RAC	RC-1	RO	RR
Professional office	P	P		P	P		P		P	
Public parks, recreation building, private club and playground	P	P		P	P				P	
Pumps					P					
Race track, any kind					P					
Radio, TV studio		P		P	P					
Radio, TV, sales and repair	P	P		P	P					
Railroad terminal				P	P					
Recreational vehicle rental		P		P	P					
Recreational vehicle sales		S	P	P	P					
Redemption center for used aluminum, glass, plastic or steel				S	P					
Refill, bottle gas cylinders		S	P	P	P	P	P			P
Refrigerating equipment, commercial				P	P					
Repair and detailing of motor vehicles, recreational vehicles, or trailers			P	P	P					
Repair, household items		P		P	P					
Repair, watch and jewelry	P	P		P	P					
Research and testing lab				S	S					
Residential Dwelling Units (for owner or employee)	P	P	S	S	S	P	P	S		P
Restaurant equipment and supply sales				P	P					
Restaurant	P	P	P	P	P		P			P
Restaurant, fast food or drive through	S	P	P	P	P		S			
Riding academy, dude ranch					P			P		P
Road material, retail and wholesale					P					
School, vocational		P		P	P					
Schools, art, business, dancing, music	P	P		P	P					
Schools, public, and accredited private or parochial	P	P		P	P				P	
Seafood shop		P		P	P					
Septic tank service					P					
Service/maintenance buildings						P				P
Sewage treatment plants with an inflow exceeding 5,000 gallons per day	S	S	S	S	S	S	S	S	S	S
Sharpening and grinding shops					P		P			
Sheet metal shop					P					
Shoe store, repair, and shine	P	P		P	P					
Shooting facility, enclosed				P	P					
Shooting facility, outdoor					P					

Commercial Classifications Uses PERMITTED USES/ SPECIAL USES	B-1	B-2	B-3	B-4	B-5	P-RV	RAC	RC-1	RO	RR
Shops performing custom work such as, but not limited to, electrical, plumbing, sheet metal, heating, ventilating and air conditioning and motor vehicle custom body work			P	S	P					
Sign shop, painting				P	P					
Skating rink				P	P					
Souvenir, notion, sundry	P	P		P	P					
Sporting goods	P	P		P	P					
Sports arena				S	P					
Sports facilities which may include tennis facility, racquet ball facility or swimming club facility						P			S	P
Sprayfields or other type of effluent disposal area when application rate exceeds 5,000 gallons per day, if allowed by law	S	S	S	S	S	S	S	S	S	S
Storage warehouse for farm products			P		P			P		
Storage warehouses		S	P	S	P					
Storage, mini-warehouse	P	P	P	P	P		P			
Supermarket	P	P		P	P		P			
Swimming pool supplies		S		S	P					
Tailor	P	P		P	P				P	
Taxidermist		P		P	P					
Television, radio, phonograph	P	P		P	P					
Theater		P		P	P					
Theater, drive-in					P					
Tire recapping and vulcanizing					P					
Tobacco	P	P		P	P		P			
Toys	P	P		P	P					
Trailers, sales and service		S	P	P	P					
Trailers, manufacturing					P					
Travel agency	P	P		P	P				P	
Truck stop facilities, gas stations, service stations and fuel stores			P		P					
Upholstery or seat cover shop				P	P					
Used merchandise (inside building)	P	P		P	P					
Used merchandise, outside building, including flea market		S		S	P					
Utility company service yards	S	S	S	S	S		S	S		
Utility/storage sheds, metal or wood, sales				P	P					
Veterinary clinic, small animals only	P	P		P	P					
Veterinary office and supplies				P	P		P	P		

Commercial Classifications Uses PERMITTED USES/ SPECIAL USES	B-1	B-2	B-3	B-4	B-5	P-RV	RAC	RC-1	RO	RR
Water supply, treatment and storage facilities which serve 15 or more service connections, or commercial or industrial buildings which are required by the building code to have fire sprinkler systems	S	S	S	S	S	S	S	S	S	S
Welding shop					P					
Wellfields Refer to Article 5	S	S	S	S	S	S	S	S	S	S
Wholesale businesses and warehouses			P		P					
Worm farm					P					

C. General Requirements for All Commercial Zoning Classifications

(1) No structure may be erected, placed upon or extend over any easement unless approved in writing by the person or entity holding said easement.

(2) All setbacks shall be measured from the outside wall of buildings or structures and from the concrete curb surrounding gas pumps; however, eaves, roof overhangs or pilasters may protrude two feet into a required setback. Gas pump island canopies may protrude ten feet into a required setback.

(3) Ground and building lights shall be confined to the property and shall not cast direct light on adjacent properties. The maximum height of a light pole shall be 35 feet in all commercial zoning classifications except B-1 and RAC where the maximum height is 25 feet.

(4) Trash containers shall be screened from public view, using opaque materials.

(5) The front setback area shall not be utilized for the display, or storage of goods, commodities or merchandise offered for sale or rent whether on a temporary or permanent basis except as noted below in Table 4.2.5. Refer to Sub-section 5.5.25 for procedures to obtain either a Temporary Use Permit or a Special Event Permit.

Table 4.2.4-2 Commercial Classifications Indoor/Outdoor Display/Storage Standards

Zoning Classification	Special Requirements
B-1	All commercial activity involving retail sales or rentals shall take place in a completely enclosed building.
B-2	All commercial activities involving retail sales or rentals except restaurants, garden centers, lawn mower, bicycle, boat, and plant nursery sales shall take place in a completely enclosed building.

Zoning Classification	Special Requirements
B-3	All uses allowed in this zoning classification shall be located within an enclosed structure with the following exceptions: • All outdoor activities and outdoor storage of materials, components, and finished goods shall be located in side or rear yard areas and shall be fenced and buffered from view from surrounding properties. • Temporary storage or parking of motor vehicles, recreational vehicles, trailers, farm tractors and equipment which are for inventory or in for repair shall be located in side or rear yard areas where they are buffered from view from adjacent properties • The display of motor vehicles, recreational vehicles and trailers, farm tractors and equipment, and heavy construction equipment which are for sale or lease may be exhibited in the front setback; however the front setback shall be increased to a minimum of 85 feet. • The temporary parking of commercial vehicles in truck stop facilities or public parking lots or facilities
B-4	All commercial activities involving retail sales or rentals except motor vehicles, farm equipment, mobile homes, motorcycles, landscape contractor's yards, farm tractors, trailers, utility/storage sheds, restaurants, garden centers, lawn mower, bicycle, boat, and plant nursery sales shall take place in a completely enclosed building.
B-5	Commercial activities such as restaurants, garden centers, lawn mower, bicycle, boat, construction equipment, fences and posts, monuments and memorials, concrete or metal pipe, road material, and plant nursery sales may take place outside of a building.
P-RV	Indoor/outside display/storage limited to permitted uses.
RAC	Uses allowed in this zoning classification shall be located within an enclosed structure with the following exceptions: • Construction or contractor's yard, building material center, garden center, farm supply store, fuel oil sales and storage, bottled gas and similar uses with outdoor activities and outside storage of materials. Components and finished goods shall be fenced and screened from view from surrounding properties. • Temporary storage or parking of farm tractors, machinery and equipment, farm irrigation equipment, horse trailers and farm wagons which are for inventory or in for repair, shall be in areas where they are screened from view from adjacent properties having dissimilar land uses. The display of farm tractors, machinery and equipment, farm irrigation equipment, horse trailers and farm wagons which are for sale or lease may be exhibited in the front setback.

Zoning Classification	Special Requirements
RC-1	Uses allowed in this zoning classification shall be located within an enclosed structure with the following exceptions: • Farm building construction yard,, bulk gypsum, lime, ground limestone or sulfur, farm storage structures, farm equipment, implements and supplies, and similar uses with outdoor activities and outside storage of materials. Components and finished goods shall be fenced and screened from view from surrounding properties. • Temporary storage or parking of farm tractors, machinery and equipment, farm irrigation equipment, horse trailers and farm wagons which are for inventory or in for repair, shall be in areas where they are screened from view from adjacent properties having dissimilar land uses. • The display of farm tractors, machinery and equipment, farm irrigation equipment, horse trailers and farm wagons which are for sale or lease may be exhibited in the front setback.
RO	Uses allowed in this zoning classification shall be located within an enclosed structure.
RR	Indoor/outside display/storage limited to permitted uses.

D. P-RV zoning classification general requirements:

The Recreational Vehicle Park Classification is intended to provide areas for the rental of spaces for travel trailers, mobile homes, manufactured homes, park models, camper and tent vehicles.

(1) Under skirting shall be provided for all units used for rental purposes and for mobile homes that rent spaces for more than 12 months.

(2) All side setbacks shall be measured from the wall of one unit or addition to the wall of the adjacent unit or addition.

(3) A service building equipped with toilets, lavatories, showers, and laundry facilities shall be provided.

(4) A park shall consist of two or more units.

(5) All additions on individual spaces must be constructed to Standard Building Codes.

E. RR zoning classification general requirements:

(1) Temporary occupancy living accommodations for recreation or travel use which may include but are not limited to the following: fifth wheel travel trailer, travel trailers, camping trailer, truck camper, motor home, van conversion, tent vehicles and tents, cabins or bunk house sleeping quarters.

(2) The proposed development or existing development shall have a total land area sufficient to meet all site design standards in this Code including, but not limited to: land required providing setbacks from abutting rights-of-way, water bodies, buffers, stormwater management, off-street parking and circulation, protection of wetlands or other provisions that may require land area to be set aside.

(3) Boat launching/docking/marine facilities must provide vehicular-trailer parking at the rate of one space per boat if public launching is allowed.

(4) All parking and non-water dependent facilities must be built on upland areas.

(5) Park model trailers or manufactured homes may also be used as temporary occupancy living quarters, when owned by the property owner.

(6) All temporary living accommodation units owned by the property owner shall be permanently

anchored in accordance with the manufacturer's instructions or ANSI A225.1, latest edition.

(7) All temporary living accommodations, manufactured homes or park model trailers, owned and rented by the property owner shall be under skirted using stucco with a simulated block, brick or stone finish.

(8) Lake and riverine wetlands and grass beds shall be protected in accordance with Section 6.6.a.(7) and Florida Department of Environmental Protection. Any environmental disruptions will be mitigated. All proposed projects located within the Environmentally Sensitive Overlay Zone shall comply with the requirements of Section 6.2 of this Code.

(9) Fueling facilities shall be designed to contain spills.

(10) Proof of permits or exemptions by other regulatory agencies shall be provided to the Planning/Zoning Manager prior to obtaining a building permit.

(11) Storage sheds or facilities, provided by the property owner, shall be permitted provided they do not exceed 100 square feet in floor area per storage shed and the shed will fit within the above setbacks. Refer to 4.n. below for location requirements.

(12) Porches, either screened or unscreened, may be erected on the site provided setbacks can be met. They shall be so designed as to be self supporting and capable of being removed from the dwelling unit.

(13) All side setbacks shall be measured from wall to wall of adjacent living units. The front setback shall be measured from the edge of paving.

(14) Where fireplaces, cooking shelters or similar facilities for open fires or outdoor cooking are provided within spaces or elsewhere, they shall be so located, constructed, maintained and used so as to minimize fire hazards and smoke nuisance within the resort and in adjoining areas.

(15) Accessory uses and structures shall be substantially related to and in the context of the character of the development and shall be located in the rear or side yard, provided required setbacks are observed.

F. RR Zoning Classification Design Requirements:

(1) Access to the recreational resort shall be from a federal, state or county maintained roadway.

(2) Individual spaces for temporary living accommodations shall have access to internal streets and shall not have direct access to adjoining public rights-of-way.

(3) Temporary living accommodation spaces or permanent dwelling units shall be located in relation to internal streets as to provide for convenient vehicular ingress and egress.

(4) Temporary living accommodation spaces shall be located in relation to pedestrian ways and principal destinations within the resort as to provide for safe and convenient pedestrian access to such destinations.

(5) Internal streets shall provide safe and convenient access to spaces and appropriate resort facilities. Alignment and gradient shall be properly adapted to topography. Construction and maintenance shall provide a well-drained, paved surface. Such surfaced roadways shall be of adequate width to accommodate anticipated traffic, and in all cases shall meet the minimum width of 12 feet per lane.

(6) Streets serving less than 50 spaces may be used as part of a pedestrian circulation system. If the relation of individual space locations to facilities within the resort calls for establishment of pedestrian ways, they shall be provided, preferably as part of a common open space system away from streets, but otherwise as sidewalks. No common access to such pedestrian ways or to facilities within the resort shall be through an individual space.

(7) Only boat docks, boat launching ramps and fueling facilities may be located within the one percent (100-year) flood plain. Fuel storage tanks shall be located on the upland area outside of

the one percent (100-year) flood plain.

(8) All facilities within the resort shall be served by a central water and sewage system. Fire flow and pressure shall be provided by the constructed water supply system. Refer to Article 6.

(9) Developments proposed for private lands within one mile of or within the proclamation boundary of the Ocala National Forest shall be reviewed by the USDA Forest Service. Comments shall be considered by the county in granting approval for the proposed development.

(10) Service buildings equipped with toilets, lavatories, showers, and laundry facilities shall be provided in accordance with Department of Health requirements.

G. RO Zoning Classification General Requirements:

Existing residential uses will be allowed to continue as a permitted use of an existing residential structure until such time as the dwelling unit(s) is converted through sale or lease for office or other permitted uses.

H. RAC General Requirements:

(1) Retained zoning. All property located in a Rural Activity Center as of the adoption date of this Code which is zoned B-1, B-2, B-3, B-4, B-5, M-1, or M-2 shall retain its respective zoning classification, however, uses shall be limited to the uses designated above for a Rural Activity Center.

(2) Proposed rezoning. Vacant property shall retain its respective zoning classification until such time as the property is to be developed. The property shall then be rezoned to RAC, Rural Activity Center classification.

(3) Single family dwelling units will be allowed on the second floor above shops or stores, or as attached ground floor units at the rear of the business, or as detached dwelling units at the rear of the shop or store. Dwelling units shall not exceed the density of two dwelling units per gross acre and are primarily for use by the business owner or employees.

(4) Residential development within the Rural Activity Centers shall be permitted at a density of up to two dwelling units per gross acre on properly zoned parcels qualifying for alternate development standards in Section 8.3.3. or on a non-contiguous parcel of record in the Rural Area as set forth in Appendix A-4.2 of the Comprehensive Plan and set forth in Section 4.3.2.

I. Zoning Lot and Building Standards

TABLE 4.2.4-3 Commercial Classifications Standards

Zoning Classification	B-1	B-2	B-3	B-4	B-5	RC-1	RO	RAC	Comments
Maximum Height	50’	50’	50’	50’	50’	50’	50’	50’	
Maximum Floor Area Ratio	0.70	0.70	0.70	0.70	0.70	0.30		0.35	
Minimum Lot or Tract Width			200’				85’		
Minimum Lot or Tract Size							10,000 SF		
MAXIMUM GROSS DENSITY DWELLING UNITS									
Residential Dwelling Units	1 per Shop or Store	1 per Shop or Store						*2 per Acre	*In RAC residential setbacks same as RR-1
SETBACKS in FEET									
Front/(If Gas Pump Island on Front)	50/ (75)	40/ (65)	70	70	70	50	25	40/ (65)	
Rear	8	25	20	25	25	25	8	25	
Side /(If Gas Pump Island on Side)	10/ (65)	10/ (65)	20/ (40)	10/ (45)	10/ (45)	10	25	10/ (60)	
Gas Pumps or Island	25	25	25	25	25			25	

Table 4.2.4-4 Commercial Classifications Standards

Zoning Classification	P-RV	RR	Comments
Maximum Height	30’	Two Stories or 40’	
Maximum Impervious Area		40% of gross parcel area	
Accessory Use			
Minimum Land Area for Recreation Facility		8 Acre	
MINIMUM LOT AREA **MINIMUM LOT WIDTH**			
Manufactured Home Mobile Home	4,000 SF 40’	4,000 SF 40’	
Park Model Trailer with Additions	2,400 SF 35’	2,400 SF 35’	Additions include screen room, awning, carport, utility room and storage shed

Zoning Classification	P-RV	RR	Comments
Park Model or Travel Trailer without Additions and all other sites	1,500 SF 30’	1,500 SF 30’	
Group Campsite		20,000 SF	
SETBACKS MANUFACTURED HOME SITES			
Front	20’	20’	Unless Parking is provided elsewhere in which case the setback is 8’
Rear	10’	10’	
Side	15’	15’ separation between units	Located on opposite side of any adjoining site’s side setback
SETBACKS PARK MODEL SITES			
Front	20’	10’	Unless Parking is provided elsewhere in which case the setback is 8’
Rear	10’	10’	
Side	15’ Separation unit to unit or unit to addition	15’ separation between units	When units are clustered to save vegetation the front corners shall have a minimum separation of 15’ and the rear corner 10’
Accessory uses (where permitted)	10’ separation between additions	10’ separation between additions	Located in side or rear only
Setbacks in Recreational Vehicle Parks designed and constructed prior to June 11, 1992: front, rear and side – eight feet. Accessory uses shall be separated by a minimum of ten feet on the side and rear.			

Sec. 4.2.5 Industrial Use

A. Contained in this section are the allowed land uses, building and lot standards (including minimum setbacks) and other general requirements specified for these zoning classifications. Phased developments are allowed. Consideration shall be given to transportation facilities (rail and highway) traffic circulation, parking, utility needs, aesthetics, and compatibility.

B. RI Rural Industrial. All undeveloped industrial parcels located in Rural Lands, as designated by the Marion County Comprehensive Plan as amended, which are not in a Rural Activity Center and which are zoned M-1 or M-2 shall retain their respective zoning. Prior to filing for development approval, the property owner shall apply to rezone the property to this zoning classification.

Table 4.2.5-1 Industrial Classifications Uses

Industrial Classifications Uses **PERMITTED USES (P) /SPECIAL USES (S)**	**I-C**	**M-1**	**M-2**	**RI**
Acids, non-corrosive, manufacturing, compounding, processing or treatment of			P	
Accessory uses: Limited to Administrative and Professional offices which are associated with permitted industrial uses, banks and financial institutions, medical and dental offices, employment and real estate agencies, food preparation, food service, eating facilities, and auditorium to serve employees.	P	P	P	
Adult entertainment		S		
Agricultural chemicals, fertilizers, disinfectants, pesticides, herbicides, manufacturing of			P	P
Agricultural laboratory		S	P	P
Agriculture, including all necessary structures and appurtenances as an interim land use	P	P	P	P
Aircraft and related components, manufacture or assembly			P	
Airport, general aviation	S	P	P	
Airport, private	S	S	S	
Aluminum, manufacture of products or products made from			P	
Animal and marine fats and oils, manufacturing and rendering of			P	S
Animal burying			S	
Animal refuse			S	
Asphalt plant			S	
Automobile repair, paint and body		P	P	
Automobile, truck or trailer rental	P	P		
Automobile, used parts, retail and wholesale	P			
Automobiles and parts, manufacture or assembly			P	
Awning and canvas, repair	P	P	P	
Bags, except burlap bags or sacks, manufacture of products or products made from			P	
Bakery (industrial)	S	P	P	
Bakery, commercial, retail and wholesale	P	P	P	
Bar/bottle club, alcoholic			S	
Batteries, manufacture of products or products made from			P	
Blacksmith shop		P		P
Blue printing, photostating, photo engraving, printing, publishing and bookbindery	P	P	P	
Boats , manufacture or assembly			P	
Boxes, paper, manufacture of products or products made from			P	
Brass, manufacture of products or products made from			P	
Candles, manufacturing, compounding, processing or treatment of			P	
Canned, frozen and preserved fruits, vegetables and food specialties, manufacturing, compounding, processing or treatment of		P	P	
Cans, manufacture of products or products made from			P	
Carpet, rug and upholstery cleaning	P	P		
Cemetery, crematory, mausoleum			S	
Ceramic products, manufacture or assembly			P	
Chemical and allied products, manufacturing, compounding, processing or treatment of			P	
Child day care centers	P	P	P	P

Industrial Classifications Uses PERMITTED USES (P) /SPECIAL USES (S)	I-C	M-1	M-2	RI
Cigarettes and cigars, manufacturing, compounding, processing or treatment of			P	
Clocks and watches, manufacture or assembly		P	P	
Coffins, manufacture or assembly		P	P	
Commercial uses which are intended to service the needs of the employees and businesses within the surrounding industrial area. The following uses shall be allowed: Retail commercial sales and services oriented to the needs of people employed within the surrounding industrial area; retail sales of products manufactured on site; and personal service businesses, including child care centers, financial service businesses, service stations, hotels and motels	P	P		
Composting of residuals, sewage sludge and food waste		S	S	P
Composting of wood products, manure and leaves		S	P	P
Computer maintenance and repair	P	P		
Concrete batch plant			P	
Concrete products, manufacture or assembly			P	
Construction equipment, sales, leasing, repair, retail and wholesale	P		P	
Copper, manufacture of products or products made from			P	
Dairy products-manufacturing or processing		P	P	P
Detergents, manufacturing, compounding, processing or treatment of			P	
Disinfectants, manufacturing, compounding, processing or treatment of			P	
Distribution and warehousing facility	P	P	P	
Dog and cat food, manufacturing, compounding, processing or treatment of			P	
Dry cleaning plant	P		P	
Dye, manufacturing, compounding, processing or treatment of			P	
Electrical appliances, manufacture or assembly			P	
Energy related uses: fuel oil and LPG storage above ground; gas regulator station; bulk oil storage tank above ground; gasoline storage tank above ground			P	
Equipment rental and leasing	P	P		
Express service	P	P	P	
Farm equipment, manufacture or assembly			P	P
Farm products, packing, crating and shipping		S	P	P
Feed and fertilizer, retail and wholesale	P	P	P	P
Feed grinding			P	P
Freight terminal	P	S	P	
Garbage transfer station	S	S	S	S
Gas meter facility, except where such permits are pre-empted by state or federal regulations	S	S	S	S
Gas supply lines, high pressure, except where such permits are pre-empted by state or federal regulations	S	S	S	S
Gas, bottled, retail and wholesale	P	P	P	P
General construction industries relating to the building industry, such as general contractors, electrical contractors, plumbing contractors, equipment rental yards, etc.	P	P	P	P
Glass, manufacture of products or products made from			P	
Grinding wheels, manufacture of products or products made from			P	

Industrial Classifications Uses PERMITTED USES (P) /SPECIAL USES (S)	I-C	M-1	M-2	RI
Hatchery			P	P
Health or athletic club facilities	P	P		
Heating and ventilating equipment, manufacture or assembly			P	
Heliport	P	P	P	
Horse or cattle sales facility			P	P
Hospital		S		
Hotel or motel	P			
Ice storage facility	P	P		P
Industrial equipment, retail and wholesale	P		P	
Iron, manufacture of products or products made from			P	
Kennel			P	
Laundry, commercial plant	P		P	
Limerock, phosphate, clay processing		P	P	P
Linen and uniform supply			P	
Linoleum, manufacture of products or products made from			P	
Livestock auction market			S	
Lubricating oil and petroleum products, manufacturing, compounding, processing or treatment of			P	
Machine shop	P	P	P	P
Machinery and machine tools, manufacture or assembly			P	
Mail and parcel delivery, private	P	P	P	
Manufacture or storage of explosives			S	
Matches, manufacture of products or products made from			P	
Mattresses, manufacture of products or products made from			P	
Meat packing plant			P	P
Meat products, prepared		P	P	
Metal buffing, plating, polishing, sandblasting		P	P	
Mini-warehouse	P	P		
Miscellaneous food preparations and kindred products, manufacturing, compounding, processing or treatment of			P	
Mortuary		P		
Motor freight or truck terminal	P		P	
Motor vehicle junk yard or recycling facility			P	
Musical instruments, manufacture or assembly	P	P	P	
Neon signs, manufacture or assembly			P	
Newspaper printing plant	P	P	P	
Novelties, manufacture or as, manufacture or assembly			P	
Oil well valves and repairs, manufacture or assembly			P	
Optical goods, manufacture or assembly	S	S	P	
Painting and varnishing		S	P	
Paper and pulp mill			S	
Paper, manufacture of products or products made from			P	

Industrial Classifications Uses PERMITTED USES (P) /SPECIAL USES (S)	I-C	M-1	M-2	RI
Parking of commercial vehicles	P	P	P	P
Pest control services	P	P		
Pharmaceutical products, manufacturing, compounding, processing or treatment of			P	
Pipe, metal, plastic, retail and wholesale	P		P	
Plastics, manufacturing, compounding, processing or treatment of			P	
Poultry slaughtering and processing, manufacturing, compounding, processing or treatment of			P	
Prepackaged software services	P	P		
Printing, photoengraving, publishing and bookbinding	P	P	P	
Process bottled water		P	P	
Pumps and plumbing supplies, retail and wholesale	P			
Radio/TV broadcasting facilities		P		
Railroad switching yard; storage of road building materials			P	
Recreation facilities such as but not limited to: archery range; golf course; golf driving range, horse racetrack. This does not include shooting ranges, skeet shooting or trapshooting facilities.		P		P
Recreation facilities such as, but not limited to the following: golf driving range; racing activities; shooting range; sporting clays, skeet or trapshooting facilities.			P	P
Refrigeration, manufacture or assembly			P	
Repair of heavy equipment, trucks and trailers			P	
Research activities, including research laboratories, developmental laboratories, and compatible light manufacturing such as, but not limited to, the following: Biochemical, Chemical, Electronics, Film and photography, Medical and dental, Metallurgy, Pharmaceutical and X-ray		P		
Restaurant equipment sales	P			
Retail and wholesale of used and recycled merchandise			P	
Satellite dish areas and accessory facilities		P	P	
Sawmill	S		P	P
School-vocational		P		
Screw machine products, manufacture or assembly			P	
Septic tank and chemical toilet manufacture			P	
Service industries or those industries providing service to, as opposed to the manufacture of, a specific product, such as the repair and maintenance of appliances or component parts, tooling, printers, testing shops, small machine shops, and shops engaged in the repair, maintenance and servicing of such items		P		
Sewage treatment plants with an inflow exceeding 5,000 gallons per day	S	S	S	S
Sheet metal shop and products, manufacture or assembly	P		P	
Shoes, manufacture or assembly		P	P	
Signs, manufacture or assembly		P	P	
Silk screens, manufacture or assembly			P	
Smelting or refining			S	
Sporting goods, manufacture or assembly			P	
Sports arena		S	P	

Industrial Classifications Uses PERMITTED USES (P) /SPECIAL USES (S)	I-C	M-1	M-2	RI
Sprayfields or other type of effluent disposal area when application rate exceeds 5,000 gallons per day, if allowed by law	S	S	S	S
Springs, manufacture or assembly			P	
Steel, manufacture of products or products made from			P	
Stencils, manufacture or assembly			P	
Stockyard			S	
Stone cutting			P	
Storage, bulk oil or gasoline tank, above ground			P	
Storage, insecticides			S	
Storage, poisonous gases			S	
Storage warehouse including inside Bulk Storage			P	
Swimming pool supplies, retail and wholesale	P			
Tin, manufacture of products or products made from			P	
Tire recapping and vulcanizing	P			
Tire store, retail and wholesale	P			
Toiletries, manufacturing, compounding, processing or treatment of			P	
Toys, manufacture or assembly			P	
Trailers, manufacture or assembly			P	
Truck stop facility			P	
Truck terminal or parking facility	P		P	
Trucks, manufacture or assembly			P	
Upholstery or seat cover shop		P	P	
Veterinary supplies, manufacture of			P	P
Vitamin products, manufacturing, compounding, processing or treatment of			P	
Water supply, treatment and storage facilities which serve 15 or more service connections, or commercial or industrial buildings which are required by the building code to have fire sprinkler systems	S	S	S	S
Waxes and polishes, manufacturing, compounding, processing or treatment of			P	
Welding equipment and supplies, retail and wholesale	P			
Welding shop	P	P	P	
Wellfields	S	S	S	S
Woodworking, cabinet, carpentry and furniture shops	P	P	P	
Wool, manufacture of products or products made from			P	
Yarn, manufacture of products or products made from			P	

C. General Requirements

(1) All setbacks shall be measured from the foundation or wall of the building or structure; however, eaves, roof overhangs, or pilasters may protrude two feet into a required setback.

(2) No structure may be erected, placed upon or extend over any easement unless approved in writing by the person or entity holding said easement.

(3) Ground and building lighting shall be confined to the property and shall not cast direct light on adjacent properties. The maximum height of a light pole shall be 35 feet above the paving surface.

(4) Trash Containers shall be screened using opaque materials.

(5) Screening of Activities. Areas used for parking of commercial vehicles, or storage of vehicles, or outdoor storage or uses shall be screened, buffered or fenced in such a manner as to screen said areas from view from access streets, freeways and incompatible adjacent properties. Such screening shall form a complete opaque screen up to a point eight feet in vertical height.

D. Zoning Lot and Building Standards

Table 4.2.5-2 Industrial Classifications Standards

Zoning Classification	I-C	M-1	M-2	RI	Comments
Maximum Height	50’	50’	50’	50’	
Maximum Floor Area Ratio	0.75	0.75	0.75	0.75	
Minimum Lot or Tract Width	150’	200’	200’		
Minimum Lot or Tract Size	40 Acres				Smaller parcels allowed by SUP
Minimum Direct Access	Collector Road				
SETBACKS, FEET					
Front	70	70	70	70	
Rear	10	25	25	25	
Side	10	25	25	25	
Gas Pump or Island	25	25	25		From any structure or property line

Sec. 4.2.6 PUD - Planned Unit Development

A. Intent and purpose. The Planned Unit Development Classification is intended to encourage the development of land as a planned residential, commercial or industrial development complex or as a planned mixed-use development; to encourage flexible and creative concepts of site planning which will preserve the natural amenities of the land by allowing an appreciable amount of land for scenic and functional open space; provide for an efficient use of land resulting in a smaller network of utilities and streets, thereby lowering development and housing costs; and provide for a more desirable environment than would be possible through the strict application of minimum zoning requirements.

It is further the intent of this Code that Planned Unit Developments shall be designed to permit the development of various size parcels ranging from small, cluster developments to entire new mixed-use communities. The development shall provide for the efficient use of public facilities and services, prevent traffic congestion, provide a stable environmental character compatible with surrounding land uses and preserve the integrity of the surrounding areas within which they are located.

Contained in this section are the allowed land uses, building and lot standards and other general requirements and standards specified for this zoning classification.

B. Permitted uses:

(1) Residential Development:

(a) Single-family attached or detached dwellings; two-family dwellings; and multi-family dwellings (three or more dwelling units per building); manufactured homes meeting the requirements of the National Manufactured Home Construction and Safety Standards (HUD Code).

(b) Churches, schools, community or club buildings, and similar public and semi-public facilities

(c) Group housing, nursing homes, congregate living and physical rehabilitation centers, adult

and child day care centers and community residential homes.

(d) Parks and Open Space.

(2) Commercial Development:

(a) All uses included in the Neighborhood Business Classification (B-1), Community Business Classification (B-2),Regional Business Classification (B-4), and the Heavy Business Classification (B-5).

(b) Office or Business Parks

(c) Churches, schools, community or club buildings and similar public and semi-public facilities, including parks and open space, child day care facilities

(3) Industrial Development:

(a) All uses included in the Industrial Complex Classification (IC), the Light Industrial Classification (M-1) and the Heavy Industrial Classification (M-2).

(b) Industrial parks

(c) Commercial recreation facilities

(d) Public and semi-public facilities, including parks and open space, and child day care centers

(4) Institutional Development:

(a) Hospitals, clinics, convalescent homes, adult congregate living facilities, physical rehabilitation centers, mental rehabilitation centers, occupational rehabilitation centers and similar facilities.

(b) Churches, schools (public or private), day care facilities (adult or child), library

(c) Other non-profit, religious or public uses or government owned or operated building, structure or land uses for public purpose.

(5) Mixed Use Development:

A combination of all permitted uses for Residential, Commercial, Industrial , and Institutional Developments, as listed in Subsections B(1-4) above.

Mixed use may only occur in the residential and industrial Future Land Use Map Classifications of the Marion County Comprehensive Plan and shall adhere to the following design requirements.

(6) Special Uses. The following uses may be allowed upon review of a SUP application by the Zoning Commission and approval by the Board of County Commissioners:

(a) Gas meter facility, except where such permits are pre-empted by state or federal regulations

(b) Gas supply lines, high pressure, except where such permits are pre-empted by state or federal regulations

(c) Sewage treatment plants with an inflow exceeding 5,000 gallons per day

(d) Sprayfields or other type of effluent disposal area when application rate exceeds 5,000 gallons per day, if allowed by law

(e) Utility company service yards

(f) Water supply, treatment and storage facilities which serve 15 or more service connections, or commercial or industrial buildings which are required by the building code to have fire sprinkler systems

(g) Wellfields

C. Land use regulation:

(1) Classification of PUD Applications - Minimum Sizes:

(a) The minimum acreage for a PUD shall be two acres.

(b) The minimum parcel size for a single use either an Industrial or Commercial Park shall be 40 acres. Mixed Use standards are in subsections (5) and (6) below.

(2) Maximum Density:

(a) The maximum density permitted shall be established by the Board, upon recommendation of the Development Review Committee and the Planning & Zoning Commission. The criteria for establishing a maximum density includes existing zoning, adequacy of existing and proposed public facilities and services, site characteristics, and the requirements of the Comprehensive Plan for any residential land use involving the area in question.

(b) In no case shall the maximum density permitted exceed that permitted by the site's land use designation except in vested developments which are vested for a higher density. The overall number of dwelling units permitted in a residential PUD shall not be allocated to any particular portion of the total site area unless the proposed development is a cluster type, residential PUD.

(c) Parcels which are subject to a land use blending overlay shall be developed in accordance with the density and or intensity established by the Comprehensive Plan Amendment.

(3) Recreation and Green Space:

(a) Such uses as yard area, landscape area, parks, playgrounds, golf courses, beaches, bikeways, pedestrian walks, perimeter buffer areas, equestrian trails, and other similar improved, usable outdoor areas may be permanently set aside and shall be designated on the PUD Concept or Master Plan and Preliminary Plat as recreation or green space.

(b) Drainage retention areas. Up to 25 percent of stormwater facilities may be counted to satisfy area/acreage requirements for required recreation and green space. A higher percentage may be approved by DRC, depending on the design and lay of the facility.

(c) Design Criteria:

1. Recreational and green space shall be integrated throughout the Planned Unit Development to provide a linked access system to the open space area where feasible.
2. Recreational and green space may be improved, including compatible structures, to the extent necessary to complement the residential, commercial or industrial uses.
3. For design purposes 0.004 acres (175 square feet) per person or 350 square feet per dwelling unit shall be used in calculating the minimum recreation and green space to be provided in the development.
4. When a golf course is utilized to partially fulfill the recreation space requirement, other facilities to meet the active recreational needs of adults and children shall be provided.

(d) Space Calculations:

1. Parking areas and road rights-of-way may not be included in calculations of recreation and green space.
2. Waterbodies may be used to partially fulfill green space or recreational space requirements in accordance with the following criteria: calculations of area of waterbodies shall not exceed 50 percent of the total recreational space. Only those waterbodies which are available to the development for water oriented recreation use such as boating, fishing, water skiing, swimming and have associated recreational land areas may be used in meeting these requirements.
3. If golf courses are used to partially fulfill recreation space requirements, a maximum of 60 percent of the golf course land may be counted toward the required recreation space. A golf course and waterbodies combined cannot exceed 75 percent of the required recreational space.

(4) Minimum Lot Area, Frontage, and Setbacks; and Accessory Uses:

(a) The minimum lot size for detached single-family structures is an area of not less than 5,000 square feet. The minimum lot size requirement may be waived by the Board if the arrangement of dwelling units provides for adequate separation of units. All lots to be platted at less than 5,000 square feet shall be required to have the typical location of structures on the Conceptual or Master Plan.

(b) Each dwelling unit or other permitted use shall have access to a public or private street. The County shall be allowed access on privately owned streets, easements and common open or green space to ensure the access of police and fire protection to meet emergency needs and to conduct County services.

(c) Minimum distances between structures and setbacks shall be:

1. Single-family detached structure. Setbacks shall be noted on the preliminary plat. On a corner lot, the side street setback shall be not less than 15 feet. The Board may reduce the required side setbacks and the distances between structures provided proposed structures do not abut utility easements or otherwise affect the ability to provide and maintain utility service to each lot.
2. Separation between multi-family structures of two stories or less - 20 feet
3. Separation between multi-family structures of three stories - 25 feet.
4. Separation between multi-family structures of four stories - 35 feet.
5. Between structures of varying heights, the larger distance separation shall be required.

(d) Front setbacks shall be a minimum of 20 feet unless waived by the Board based on the recommendation of the Development Review Committee.

(e) Commercial tracts shall be subject to the same development standards as are found in B-1, B-2, B-4, and B-5 zoning classifications, as appropriate.

(f) Accessory uses and structures shall meet the setbacks shown on the master plan documents or as a minimum those set forth in the R-1, B-2, and M-1 zoning classifications.

(5) Maximum Commercial Use Area:

(a) Commercial uses will be limited to those uses permitted in the B-1 (Neighborhood Business Classification) for projects of a size equal to or greater than 250 dwelling units but less than 800 dwelling units; and to those uses permitted in the B-2 (Community Business Classification) for projects of a size equal to or greater than 800 dwelling units. Commercial uses are not permitted in projects under 250 dwelling units. More intense commercial uses may be permitted upon review and recommendation of the Development Review Committee.

(b) The maximum commercial use area permitted within a PUD shall be two acres per each 250 dwelling units. Said areas shall be situated internally and buffered so as not to create detrimental effect on adjacent residential areas. Said areas shall be located so as to best serve the residents of the project. Said areas shall not be located at the perimeter of the project with frontage on or direct access to a major through road so as to attract a market substantially outside of the project, unless such location is consistent with the location standards of the Future Land Use Map of Marion County.

(c) The commercial use area shall be specifically included in the development schedule.

(6) Maximum Commercial Use Area in an Industrial Future Land Use Map Classification:

(a) Commercial uses will be limited to projects of 100 acres or more in size and to those uses permitted in the B-2 (Community Business) classification only.

(b) The maximum commercial use area permitted within a PUD shall not exceed one third of the total number of acres designated for industrial use. Said commercial areas shall be oriented,

for vehicular access purposes, toward the interior of the PUD and; shall not have direct access to an arterial or collector roadway right-of-way as classified by the Marion County Comprehensive Plan or section line, quarter section line collectors.

(c) The commercial use area shall be specifically included in the development schedule.

D. Special requirements:

(1) Industrial developments shall comply with the performance standards in Division 3.

(2) All setbacks shall be measured from the foundation or wall; however, eaves, roof overhangs, pilasters, and similar architectural features may protrude two feet into a required setback.

(3) No structure may be erected, placed upon or extend over any easement unless approved in writing by the person or entity holding said easement.

(4) Outdoor ground and building lighting shall not cast direct light on adjacent dwellings or properties.

(5) Development Standards:

(a) The minimum construction requirement for streets or roads, sidewalks, sewer facilities, utilities and drainage shall be in compliance with the requirements of Article 6. Design requirements with respect to streets, sidewalks and drainage may be waived by the Board upon the recommendation of the Development Review Committee.

(b) The design of industrial parks or industrial areas shall give consideration to transportation facilities (rail and highway), traffic circulation, parking, utility needs, aesthetics and compatibility.

E. Review and approval procedures:

(1) PUD Plan Submittal:

(a) A zoning application submittal shall be accompanied by a Conceptual Plan, Master Plan, Major Site Plan or Preliminary Plat and at a minimum establishing:

1. Intent and character of the development.
2. Location of internal and external arterial or collector streets and connection points between and to those streets within the development.
3. Minimum lot/parcel sizes including heights or project design standards based on use such as residential vs. non-residential.
4. Building setbacks.
5. Dwelling unit types or mixes and maximum development density and units.
6. Maximum commercial gross leasable areas (GLA) for individual lots or tracts and project wide.
7. Industrial building square footage or lot coverage percentage for individual lots or tracts and project wide.
8. Minimum size and general location of common open space including buffer areas or zones and method of ownership and maintenance.
9. Conservation open space areas with intended method of preservation ownership or maintenance.
10. Location of water and sewage facilities.

(b) These documents shall be concurrently reviewed by the Development Review Committee who shall make a recommendation for approval or approval with conditions or for denial to the Planning & Zoning Commission and to the Board.

(c) PUD Amendments:

1. Changes to the plan of development which will affect the following items shall be subject to review and approval by Development Review Committee:
   a. Changes in the alignment, location, direction or length of any internal local street,
   b. Changes or adjustments in lot or parcel development standards which do not reduce the minimum lot or parcels standards listed in item (a)3.
   c. Changes in commercial gross leasable areas (GLA) for individual lots or tracts which do not result in increased overall GLA square footage,
   d. Changes in industrial building square footage or lot coverage percentage which do not result in increased overall building square footage or total lot coverage percentage,
   e. Changes in mixed use land uses and overall dwelling unit densities, or commercial GLA square footage or industrial building square footage or total lot coverage percentage, which do not result in an increase to the above categories,
   f. Reorientation or slight shifts or changes in building or structure locations including setbacks
   g. Major changes listed below which are subject to final review and approval by the Board.
2. Changes which will modify or increase the density or intensity of items (a) 1-10 above shall be subject to review and approval by the Board through the PUD rezoning application process.

(2) Preliminary Plat/Major Site Plan:

(a) The Preliminary Plat or Major Site Plan for the first phase of development shall be submitted within two calendar years after approval of the PUD Zoning and the Master or Conceptual Plan by the Board.

Sec. 4.2.7 G-U - Government Use.

Intent and purpose. The Governmental Use Classification is intended to apply to those areas where the only activities conducted are those of the U. S. Government, State of Florida, Marion County Board of Commissioners, Marion County School Board or incorporated communities in Marion County

A. Special Use. The following uses may be allowed upon review of a SUP Application by the Zoning Commission and approval by the Board:

(1) Airport
(2) Armory
(3) Equipment yards
(4) Fire station
(5) Garbage transfer station
(6) Gas meter facility, except where such permits are pre-empted by state or federal regulations
(7) Gas supply lines, high pressure, except where such permits are pre-empted by state or federal regulations
(8) Government owned auditorium
(9) Hospital (County owned)
(10) Landfill, any type
(11) Landfill, construction and demolition
(12) Park and recreation areas

(13) Penal institution, jail

(14) Post Office (U.S. Postal Service owns land & building)

(15) Schools

(16) Sewage treatment plants with an inflow exceeding 5,000 gallons per day

(17) Sheriff's Substation

(18) Sprayfields or other type of effluent disposal area when application rate exceeds 5,000 gallons per day, if allowed by law

(19) Water supply, treatment and storage facilities which serve 15 or more service connections, or commercial or industrial buildings which are required by the building code to have fire sprinkler systems

(20) Wellfields

B. Lot and building standards:

The height limitations, setbacks and tract width shall be appropriate for the proposed use but in no case shall be less than for an R-1, single family, zoning classification.

C. General requirements:

(1) All setbacks shall be measured from the foundation or wall of buildings or structures; however, eaves, roof overhangs, pilasters, chimneys, and similar architectural features may protrude two feet into the setback.

(2) No structure or building may be erected, placed upon or extend over any easement unless approved in writing by the person or entity holding said easement.

(3) Outdoor ground and building lighting shall not cast direct light on adjacent dwellings, structures or properties. Light pole height shall not exceed 25 feet.

(4) Trash containers shall be screened using opaque materials.

Division 3 Special Requirements

Scope. No land in the unincorporated area of Marion County shall be used or occupied, and no building, structure or part thereof shall be erected, constructed, reconstructed, moved or structurally altered unless in full compliance with the regulations specified in this Code.

Sec. 4.3.1 Home Occupation.

A. Any business or commercial activity that is:

(1) Conducted within a single family dwelling unit in a residential zoning classification and is incidental to the principal residential use of the premises, or

(2) Conducted on the same tract with the principal structure in an agricultural zoning classification, and

(3) Which is a permitted use within the agricultural zoning classification and conducted without significantly adverse impact on the surrounding area

B. Residential - General requirements:

(1) A Home Occupation Permit requires the approval of the Planning/Zoning Manager and the Building Manager on an application form confirming the following requirements:

(a) The area used for the Home Occupation shall not exceed 20 percent of the gross floor area of the dwelling unit or 400 square feet, whichever is less, and shall conform to all applicable codes.

(b) No part of the proposed activity or use shall be conducted in an accessory building or structure.

(c) No goods, stock-in-trade or other commodities shall be displayed on the exterior.

(d) No on-premise retail sales shall occur.

(e) Only bona fide members of the family lawfully occupying the dwelling unit shall be employed in, or work at, the Home Occupation.

(f) The proposed activity shall not create objectionable noise, fumes, odor, dust, vibration, electrical interference or hazardous wastes.

(g) If the garage portion of the dwelling unit or one bay of a two bay garage is committed to Home Occupation use, an additional parking space on the lot shall be provided in order to meet the residential parking requirements.

(h) Signage is limited to a non-illuminated wall sign having no moving parts or flashing lights, does not exceed two square feet and is compatible with the neighborhood architectural character.

C. Agricultural - General requirements:

(1) A Home Occupation permit requires the approval of the Planning/Zoning Manager and the Building Manager on an application form confirming the following requirements:

(a) The Home Occupation may be conducted within the dwelling unit or in an accessory building.

1. Within the dwelling unit, the area used for the Home Occupation shall not exceed 20 percent of the gross floor area of the dwelling unit or 400 square feet, whichever is less, and shall conform to all applicable codes.

2. Within an accessory building, the area used for the Home Occupation shall not exceed 600 square feet and shall conform to all applicable codes.

(b) No goods, stock-in-trade or other commodities shall be displayed on the exterior.

(c) No on-premise retail sales shall occur.

(d) Only one person, in addition to members of the family lawfully occupying the dwelling unit, may be employed in, or work at, the Home Occupation.

(e) The required number of parking spaces for a dwelling unit shall be maintained if a portion of the garage is used for the Home Occupation plus one space per employee.

(f) Accessory building parking spaces shall be provided in the ratio of one space per 300 square feet of gross floor area or fraction thereof.

(g) Signage. One sign, either single or double faced non-illuminated, not exceeding six square feet in size and not higher than four feet, may be located no closer than five feet to the front tract line of the tract on which the Home Occupation is conducted.

D. Non-inclusive examples of enterprises that may be considered as Home Occupations if they meet the foregoing definitional criteria are: the office or studio of an artist, musician, lawyer, architect, engineer, teacher, accountant or similar professional; workshop for potter; tailoring and dressmaking; single chair or station barber or beauty shop, computer programming, telephone answering service and gun dealers.

E. Permit revocation. Upon the complaint of the County or any person, the County's Board of Adjustment may revoke a permit authorizing a Home Occupation, after notice to the holder of the permit and public hearing, for noncompliance with or violation of the requirements of this section.

Sec. 4.3.2 Density exceptions and aggregation of contiguous lots.

A. The following definitions apply to this sub-section:

(1) Contiguous parcels are those parcels of land with at least one common property line.

(2) Non-contiguous parcels are those parcels that do not have any common property lines, or which are separated by platted or unplatted roads, streets or alleys which have been dedicated for

public use, or prescriptive easements for road right-of-way purposes.

(3) Parcels or Tracts of Record:

(a) Recorded or registered parcels or tracts and those parcels or tracts shown on all other unrecorded subdivisions, plats or surveys existing as of August 14, 1970; or

(b) Lots, parcels or tracts which were created and recorded in the public records of Marion County on or before January 1, 1992; or

(c) Parcels in subdivisions approved by the Board of County Commissioners and recorded in the public records of Marion County prior to January 1, 1992; or

(d) Parcels located in unrecorded subdivisions or registered divisions of land into "flag lots," as that term is commonly known in Marion County, which were filed and accepted by Marion County and existed as of January 1, 1992.

(4) For definitions of subdivision, plat, recorded subdivision, unrecorded subdivision and registered divisions of land see Article 2.

B. An exception to the densities prescribed in the Marion County Comprehensive Plan, Future Land Use Element, shall be allowed for all non-contiguous parcels of record, under one ownership, created on or before January 1, 1992, and evidenced by a properly executed deed or contract for deed held by the purchasing party, as of August 11, 1993, for the purpose of constructing one single-family residential unit.

The deed or contract for deed shall be recorded in the public records of Marion County on or before August 11, 1993, or proven by clear and convincing evidence to have been in existence on or before August 11, 1993. Clear and convincing evidence shall require a copy of the document, properly executed, and copies of cancelled checks or other proof of payments having been made prior to August 11, 1993.

C. Recorded and unrecorded subdivisions that are allowed density exceptions or that will be required to aggregate contiguous lots are as follows:

(1) Parcels within that phase of a recorded or unrecorded subdivision which met the applicable conditions set forth below prior to January 1, 1992, shall be permitted to develop at the density established for that subdivision provided that all Chapter 10D-6 F.A.C. requirements and all other requirements of the Comprehensive Plan as amended, the Land Development Code as amended, and all other applicable codes are met.

Those recorded or unrecorded subdivisions not meeting the requirements listed below will be required to aggregate parcels to meet the density requirements of the Comprehensive Plan as amended.

(a) Subdivisions that have direct access to a county paved road and in which all parcels front on a continually maintained paved or stabilized road that meets the standards established by Marion County; and

(b) Parcels within subdivisions in which all parcels are served by a stormwater management system that functions at the standards established by Marion County; and

(c) Parcels within subdivisions in which the sale of individual lots to persons by the original subdivider has occurred at the following rates prior to August 11, 1993:

1. At least 85 percent of the total number of lots are sold if the subdivision was created in 1982 or before;

2. At least 60 percent of the total number of lots are sold if the subdivision was created from 1983 to 1987 inclusive;

3. For subdivisions created after 1987 the following conditions apply in order for no aggregation requirements to be placed upon contiguous lots within the subdivision:

a. At least 50 percent of the total number of lots are sold by 1993 if the subdivision was created in 1988; or

b. At least 50 percent of the total number of lots are sold by 1994 if the subdivision was created in 1989; or

c. At least 50 percent of the total number of lots are sold by 1995 if the subdivision was created in 1990; or

d. At least 50 percent of the total number of lots are sold by 1996 if the subdivision was created in 1991; or

e. At least 50 percent of the total number of lots are sold by 1997 if the subdivision was created in 1992.

The percentage of lots sold is meant to reflect the good faith sale of individual lots to many individuals and not the transfer of large number of a lots to investors. The County shall deny this exception if the sale of lots as indicated above does not reflect this intent.

(d) Where existing parcels or tracts of record do not abut for at least 40 feet on a street; or where the setback requirements set forth herein preclude development of the parcel or tract; and where the parcel or tract could be developed in conformance with the zoning code in effect prior to the adoption of this Code the prior requirements shall prevail.

Sec. 4.3.3 4-H and FFA exemptions from code requirements.

Exemption from use or other requirements of this Code may be temporarily allowed by the Planning/Zoning Manager for 4-H Club or FFA projects.

A. The student requesting an exemption shall file an application with the Planning/Zoning Manager on a prescribed form which may be obtained from the Growth Services Department. The completed form must be returned to the Planning/Zoning Manager after certification from the appropriate school official of the student's school or by the County Extension Agent (4-H Program Leader).

B. All animals for 4-H Club and FFA projects shall be kept in a fenced area. Large animals, for purposes of this section are defined as horses, cattle, llamas, ostriches, sheep, swine, and goats. All other animals shall be defined as small animals. The total number of animals and location of structures are limited as follows:

(1) Large Animals. The size of the fenced area and any covered stall shall be determined by the County Extension Agent (4-H Program Leader) or the FFA School Advisor. A plan drawn to scale showing the location of the fenced area and all existing improvements shall be submitted with the form.

(2) All pasture and structures used for 4-H Club and FFA projects shall be located on the side or the rear of the main building and if in the Environmentally Sensitive Overlay Zone shall meet the requirements of Article 5.

Sec. 4.3.4 Alcoholic beverages.

A. No commercial establishment used for the on premises sale and consumption of beer, wine, liquor or other intoxicating beverages shall be permitted to locate within 1,000 feet of any church, school or public park in existence on the date the alcoholic beverage permit is issued.

B. No establishment used for the sale of liquor or other intoxicating beverages for off premises consumption shall be located within 500 feet of any church, school, or public park in existence on the date the alcoholic beverage permit is issued. Exempted from this subsection is the sale of beer and wine for off premises consumption.

C. The term "public park" as used in this section shall mean a park open to the general public owned either by Federal, State, County or City Governmental Agencies or church parks adjacent to

churches.

D. Establishments existing on the effective date of this Code which do not meet the above requirements shall be deemed non-conforming uses.

E. For the purposes of this section, a church, school or establishment shall be deemed to be existing if all necessary permits for construction have been acquired and remain active.

F. For purposes of distance limitations, the measurement shall be made by extending a straight line from the nearest building line point of the regulated establishment to the nearest property line point of improved school or church grounds used as part of the school or church; or the nearest property line point of the park grounds.

G. If a school, church or park is located within the limits of an incorporated city or town or within another county, the requirements specified in subsections A, B and F above shall apply.

H. On premises sale and consumption of beer, wine, liquor or other intoxicating beverages may be permitted by right in golf course clubhouses, subject to the requirements of this section and the State of Florida.

I. On premises sale and consumption of beer, wine, liquor or other intoxicating beverages may be permitted by right and exempt from spacing requirements in a restaurant establishment where the requirements of the State of Florida License include a majority of the sales to be food items and the restaurant floor space is a minimum of 2,500 square feet in size with at least 150 seats.

J. Special events requiring a temporary one, two, or three day permit from the State of Florida for on premise alcohol consumption and Churches or other Houses of Worship holding celebrations requiring the same State of Florida permit shall be exempt from the spacing requirements above.

K. An applicant may request a SUP for an establishment proposing sales of alcohol where the above referenced spacing requirements cannot be met. Notification of all church, school, or public park facilities within the prescribed spacing distances above is required.

Sec. 4.3.5 Manufactured buildings, manufactured homes and mobile homes.

A. Manufactured Buildings. Manufactured Buildings, as defined in this Code and Chapter 553, Part IV, Florida Statutes, which are used for residential structures and approved by the Department of Economic Opportunity with proper insignia attached, will be allowed as a matter of right in all zoning classifications which allow residential structures.

B. Manufactured Homes and Mobile Homes. Manufactured Homes and Mobile Homes, as defined in this Code and Chapter 553, Part IV, Florida Statutes, which are used for residential structures, will be allowed as a matter of right in the following zoning classifications: A-1, A-2, A-3, RR-1 and R-4.

C. A manufactured building, manufactured home, or mobile home shall not be used for storage or any other non-residential use for which it was not designed and manufactured as evidenced by the manufacturer's certification.

D. Special Use Permit (SUP). The Board may approve the installation of manufactured homes in the R-2, R-3, and R-E zoning districts by SUP, subject to the following requirements.

(1) Compatibility. The applicant shall demonstrate that the installation of the manufactured home is compatible with existing uses in the surrounding area and meets all requirements for issuance of a SUP.

(2) Construction. The manufactured home must be new (never previously titled or occupied).

(3) Main Body. The main body of the manufactured home, as located on the site, shall be a minimum width of 20 feet.

(4) Roof Pitch, Overhang and Materials. The main roof of the manufactured home shall have a nominal roof pitch of at least one foot rise for each four feet of horizontal run and the minimum roof overhang shall be one foot. All roofing material shall be consistent on such roof and shall be

compatible with site built houses in adjacent or nearby locations.

(5) Exterior Finish. Exterior finish shall be consistent with site built homes in adjacent or nearby locations, provided however, that reflection from such exterior finish shall not be greater than from siding coated with clean white gloss exterior enamel.

(6) Skirting. All manufactured homes shall have stucco skirting on all sides of simulated or real block, brick, stone or equivalent.

(7) Foundations. All manufactured homes shall be located on approved foundations similar and compatible in appearance to foundations of adjacent or nearby site built residences.

(8) Site Orientation. All manufactured homes shall be placed on lots in such a manner as to be compatible with and reasonably similar in orientation to the site built housing which has been constructed in adjacent or nearby locations.

(9) Garages, Carports and Driveways. A manufactured home shall be required to have a garage or carport compatible with adjacent or nearby site built garages or carports. Driveways and the floors of garages or carports shall be paved compatible with adjacent or nearby site built residences.

(10) Steps. Front and back steps to manufactured homes shall be concrete with hand rails, as required by the Building Code. Wooden steps with an attached deck may be allowed if compatible with adjacent or nearby sites.

(11) Underground Utilities. Underground electric service shall be required.

(12) Additional Conditions. The Board may include additional conditions or modify these required conditions to assure similarity in exterior appearance and compatibility between manufactured housing and site built dwellings in adjacent or nearby locations.

Sec. 4.3.6 Used manufactured home, mobile home and park trailer regulations.

A. No person shall park or store an unoccupied mobile home or park trailer except in a completely enclosed structure, unless otherwise provided for in this Code.

B. A mobile home or park trailer shall not be used for storage or any other non-residential use for which it was not designed and manufactured as evidenced by the manufacturer's certification.

C. A mobile home, park trailer or travel trailer may be used as a temporary residence incidental to construction on or development of property for a residential use on which the mobile home, park trailer or travel trailer is located only during the time in which construction or development is actively underway, and in no case for more than six months, subject to renewal. Except that a mobile home is prohibited from use as temporary residence on R-1 zoned property. Such use is subject to the approval of the Planning/Zoning Manager.

D. A single travel trailer and/or recreational vehicle which have a self-contained disposal system shall be permitted in any residential zoning as a non-commercial guest of the resident of the property involved, for a period not to exceed 21 days in any 60 day period by a Temporary Use Permit through the Growth Services Zoning Division.

E. Travel trailers and recreational vehicles which have a self-contained disposal system shall be permitted in any agriculture zoning as a non-commercial guest of the owner or resident of the property involved, for a period not to exceed 60 days in any 365 day period. A limit of five travel trailers or recreation vehicles is permitted at one time by a Temporary Use Permit through the Growth Services Department, six or more by Special Event Permit with the approval of the Marion County Department of Health and the County Administrator.

Sec. 4.3.7 Junk yards.

A. All junk yards shall comply with the following standards:

(1) Minimum lot size. No junk yard shall be located upon any lot or tract of land consisting of less than 20 acres, except those junk yards in existence on the adoption date of this Code.

(2) Adjacent zoning. No junk yard shall be located within 300 feet of property zoned for residential, commercial, A-2 or A-3, excluding those junk yards in existence on the adoption date of this Code.

(3) Screening and Buffering. All junk yards shall be completely enclosed by an opaque screening device with a minimum height of eight feet. The device may have no more than two gates, which gates shall be non-transparent when closed. The screening device may be constructed of vegetation, wood, metal, chain link fencing, masonry or other similar material, provided that the device must be designed, constructed and maintained to obscure the view of the interior of the junk yard from the outside. Further, the screening device shall be constructed of the same material and be of relatively uniform height or slope along the entire length of a property line; however, different screening devices may be used on different property lines. Except for vegetation, no screening device shall exceed a height of 20 feet. Except as provided in Subsection f., below, all screening devices shall comply with minimum required structure setbacks; provided, however, that a screening device of vegetation may be located within the required front yard setback as long as all junk is stored behind the setback line. Screening devices shall be properly maintained.

B. Site Plan Submittal. All applicants shall submit a site plan drawing and a topographical map (including elevations to the centerline of the nearest roads) of the site, showing the proposed screening method and materials to be used on all lot lines.

C. Approval of junk yard. The Board shall not approve the location of a junk yard upon any parcel if the topography of the parcel is such that the interior of the junk yard cannot be screened from view from the outside of the junk yard.

D. Deletion of screening device. The Board may, after proper application and public hearing, authorize deletion of a screening device along one or more property lines if the Board finds that the view of the interior of the junk yard will be adequately screened without requiring a screening device.

E. Storage of junk. No junk, vehicles, or other material may be piled up or stored at an elevation higher than the top of the screening device at its lowest point. In approving the screening devices for existing junk yards under Subsection F, below, the Board may authorize higher storage limitations to the extent reasonably necessary, because of the size and topography of the lot or tract on which the junk yard is located. Such authorization for higher storage limitations may be rescinded by the Board upon notice to the affected junk yard owner and an opportunity to be heard.

F. Existing Junk Yards. All legal junk yards existing on June 18, 1992 were required to file a screening plan showing the topography of the junk yard, the location of the proposed screening device, the nature of the proposed screening device, and the location and type of proposed gates by December 18, 1992. Any above referenced junkyard existing on ??/??/?? (adoption date of this amendment) which does not have an approved screening device constructed in accordance with an approved plan shall be deemed to be a non-conforming use and a public nuisance, and must comply with current buffering and screening requirements, the County may take appropriate steps to abate such a non-conformity and/or public nuisance.

G. See Springs Protection Overlay Zone for specific requirements within that zone.

Sec. 4.3.8 Nursery schools, day schools and kindergartens. Nursery schools, day schools, child day care centers, and kindergartens shall comply with the following requirements.

A. Total tract area shall not be less than 15,000 square feet and tract width shall not be less than 100 feet.

B. A fenced play area must meet State Regulations.

C. No portion of the fenced play area shall be closer than 20 feet to any residential tract line.

D. A noise buffer such as a solid masonry wall, or vegetative screening shall be required between fenced play areas and residential tract lines.

E. All outdoor play activities shall be conducted within the fenced play area, and no outdoor play activity shall be conducted before 8:00 a.m. or after 8:00 p.m.

Sec. 4.3.9 Performance standards for commercial and industrial zoning classifications.

A. Application. All uses in the B-3, B-5, IC, RAC, M-1, and M-2 zoning classifications shall comply with the performance standards set forth below:

B. Methods for Measurement. In determining compliance with the requirements herein, standard instruments which have been accepted by the particular industry involved shall be used. Listed below are the instruments and manuals which shall be used, except that suitable substitutes as determined by the Planning/Zoning Manager may also be used. The initials listed before the particular instruments or manuals are symbols which will be used elsewhere in these regulations. The manuals, codes, and description of measuring devices cited below, are hereby adopted by reference as if the works appeared in this Code in their entirety. The most recent amendment or revision of each code or manual shall be used.

C. Standard Manuals and Measuring Devices:

(1) The following devices and instruments standardized by the American Standards Association shall be used:

A.D.I. ATMOSPHERIC DUST IMPINGER

(2) One of the following devices or its equivalent for measuring cup flash points shall be used:

PENSKY-MARTENS

TAGLIABUE

(3) The following charts and manuals are hereby adopted by reference as they may apply to the regulations set forth herein:

BMI 6888 THE RINGELMANN CHART DESCRIBED IN U.S. BUREAU OF MINES INFORMATION CIRCULAR 6888.

APAM "AIR POLLUTION ABATEMENT MANUAL" OF THE MANUFACTURING CHEMIST ASSOCIATION.

PHR 47 U.S. PUBLIC HEALTH REPORT 47, NO 12. "MEASUREMENT OF DENSITY OF MINERAL DUSTS"

ICR 12 INDUSTRIAL CODE RULE NO. 12 ADOPTED BY THE BOARD OF STANDARDS AND APPEALS OF THE NEW YORK STATE DEPARTMENT OF LABOR

CFR 10 TITLE 10, CHAPTER 1, PART 20 CODE OF FEDERAL REGULATIONS, "STANDARDS FOR PROTECTION AGAINST RADIATION"

D. Smoke. For the purpose of determining smoke units, the Ringelmann Chart shall be employed (BMI 6888). Each reading (Ringelmann Number) shall be multiplied by the time in minutes for which it was observed, and the products added together to give the total number of smoke units observed during the total period of observation. This total shall then be converted into units per hour. The emission of more than ten smoke units per hour per stack, and smoke with a density in excess of Ringelmann No. 2 is prohibited except as indicated below. For special operations, the following limitations apply:

MAXIMUM FREQUENCY AND PERMITTED SMOKE UNITS AND DENSITIES FOR SPECIAL OPERATIONS

MAXIMUM FREQUENCY PERMITTED:

(1) For rebuilding fires within 24 hour period.....once

(2) For banking or cleaning fires, soot blowing, or process purging.....once in

6 hours

MAXIMUM SMOKE UNITS PERMITTED PER HOUR PER STACK DURING SPECIAL OPERATIONS:

RINGELMANN NO. 1	20
RINGELMANN NO. 2	10
RINGELMANN NO. 3	3

E. Odor. No odor shall be permitted at any facility property line exceeding the lowest amount set forth in the Table III, "Odor Thresholds" of Chapter 5 APAM. For compounds not described in the table, odor thresholds shall be described in Chapter 5 of APAM, and no odor shall be permitted at any facility property line exceeding the amount determined by such method.

F. Toxic or Noxious Matter. The concentration of toxic or noxious odors shall not exceed, at any point on or beyond any facility property line, one-tenth of the maximum allowable concentration set forth in Section 12.29 of ICR12 measured with the A.D.I.

G. Radiation. No operation, whether or not licensed by the atomic energy commission, shall be conducted in a manner which exceeds the standards set forth in CFR10.

H. Fire and Explosive Hazards:

(1) Storage and utilization of solid materials or products which are incombustible or which in themselves support combustion and are consumed slowly as they burn is permitted.

(2) Storage, utilization or manufacture of solid materials or products including free burning and intense burning is permitted provided that said material or products shall be stored, utilized or manufactured within completely enclosed buildings having incombustible walls and protected throughout by an automatic fire extinguishing system.

(3) Storage, utilization, or manufacture of flammable liquids, or materials which produce flammable or explosive vapors or gases shall be permitted in accordance with the following table, exclusive of storage of finished products in original sealed containers which shall be unrestricted. The quantity in cubic feet (S.T.P.) permitted shall not exceed 300 times the quantities listed below where the factor is the volume in cubic feet occupied by one gallon of the liquid. Cap flash points shall be measured by the Pensky-Martens, Tagliabue or other standard test equipment. Closed cup flash point is the temperature at which a liquid sample produces sufficient vapor to flash, but not to ignite, when in contact with a flame in a closed cup tester.

TABLE 4.3.9-1 Total Capacity of Flammable Materials Permitted (In Gallons)

M-1 AND IC CLASSIFICATIONS		
INDUSTRIES ENGAGED IN STORAGE ONLY	**Above Ground**	**Under Ground**
Materials with Closed Cup Flash Point Over 187 Degrees F.	Prohibited	100,000
Flash Point 105 Degrees F. -187 Degrees F.	Prohibited	40,000
Flash Point Under 105 Degrees F.	Prohibited	20,000
INDUSTRIES ENGAGED IN UTILIZATION AND MANUFACTURE OF FLAMMABLE MATERIALS		
Materials with Closed Cup Flash Point Over 187 Degrees F.	50,000	100,000
Flash Point 105 Degrees F. - 187 Degrees F.	20,000	40,000
Flash Point Under 105 Degrees F.	5,000	10,000
M-2 CLASSIFICATION		
Unrestricted, provided, that storage, handling and use shall be in accordance with "Standards of National Board of Fire Underwriters for Storage, Handling, and use of Flammable Liquids," National Board of Fire Underwriters Pamphlet No. 30, June, 1959.		

I. Electromagnetic Interference. No use, activity, or process shall be conducted which produces electromagnetic interference with normal radio or television reception in residential or business districts.

J. Violation of standards:

(1) If in the opinion of the Planning/Zoning Manager a violation of these performance standards has occurred, the Planning/Zoning Manager shall send a written notice of said violation to the owner of the property by certified mail. The owner shall have 30 days to correct the violation unless, in the opinion of the Planning/Zoning Manager, there is an imminent peril to the life and property of persons adjacent to the alleged violation, in which case the violation shall be corrected within ten calendar days.

(2) Where determinations of a violation can be made by the Planning/Zoning Manager using equipment normally available to the County or obtainable without extraordinary expense, such determination shall be made before notice of violation is issued.

(3) Where technical complexity or extraordinary expense makes it unreasonable for the County to maintain the personnel or equipment necessary to make the determination of violation, then the County shall call in properly qualified experts to make the determination. If expert findings indicate a violation of the performance standards, the costs of the determination shall be assessed against the properties or persons responsible for the violation in addition to the other penalties prescribed by this Code. If no violation is found, cost of the determination shall be paid entirely by the County.

Sec. 4.3.10 Sales offices in residential subdivisions.

A. A single sales office will be allowed by right, located on a platted and recorded residential subdivision lot, in a model home, subject to the provisions of parking, water and sewage facilities meeting the requirements of this Code.

B. Sales of land or homes or property not located within the subdivision is prohibited. Upon the cessation of sales, the model home shall be removed or converted for use as a private home.

C. A single non-illuminated on-site advertising sign may be permitted. The maximum size of the sign is 32 square feet and maximum height shall be 10 feet.

Sec. 4.3.11 Mining and excavation.

A. Existing mines which are permitted in conformance with the requirements of the Florida Statutes and the Florida Administrative Code will be allowed to continue operation in rural and urban areas provided: The excavation, screening, crushing, processing, storing or distributing of limerock, phosphate, sand, gravel, clay or other mineral resources, within the same ownership or leasehold, has been actively pursued within the three year period prior to June 11, 1992.

B. Resource extraction from sites other than existing mines will be allowed in any zoning classification by SUP. Buffers and screening will be provided within a minimum setback of 25 feet in accordance with Article 6. Resource extraction shall be conducted in accordance with federal and state statutes.

(1) Exceptions. A SUP is not required for the following activities:

a. Existing mines covered by Sub-Section A above.

b. Expansion of existing, on-going aquaculture operations

c. Removal of excess material resulting from commercial, industrial and residential site improvements, except fish ponds

d. Any size pond, providing excavated material remains on site.

e. Road construction projects wherein materials are reused or excess materials must be removed.

C. New and expanding mining projects which include: (a) at least 35 percent of the proposed excavated area is located in a MCAVA category of "more" or "most" vulnerable, or (b) the operations will excavate within 15 feet of predicted height of potentiometric surface, or lime rock, whichever is higher, shall meet the requirements of the Springs Protection Overlay Zone in Article 5.

Sec. 4.3.12 Roadside vendors.

A. Roadside vendors as used herein shall mean a person who sells goods as follows:

(1) From a roadside stand: fruit, vegetables, produce, peanuts (boiled or roasted), fireworks, Christmas trees, firewood; and

(2) From a Florida Department of Business Regulation, Division of Hotels & Restaurants approved cart: food such as but not limited to hot dogs or sausages, barbecued meat and uncooked seafood.

B. Sale of the above listed merchandise shall be conducted from a flame retardant tent or pole-barn type facility with the exception of peanuts, food vendors and Christmas trees, which are not required to have a structure on the land. This facility shall be located on private property which is either owned or leased by the vendor. Sales are prohibited within the County right-of-way.

C. Roadside venders are intended to function independently. Services such as electric, water, and sewer shall not be permitted on vacant land.

D. Sale of listed merchandise will be allowed by right in the following zoning classifications: A-1, A-2, A-3, B-1, B-2, B-4, B-5, M-1, and RAC, upon meeting the following conditions:

(1) Driveway access permits will be obtained from the appropriate permitting agency.

(2) Adequate parking area shall be provided on site for customers including handicapped persons, who shall be provided service without leaving their vehicle if requested.

(3) Parking areas shall be covered with a layer (minimum 1-1/2" thick) of bark chips, sawdust, shavings or combination thereof, or construct a stabilized base parking area or pave the parking area.

(4) On site rest room facilities are to be provided when more than two persons are employed on the site.

(5) Water and soap for the washing of hands shall be available on site.

(6) A covered trash or garbage receptacle with a plastic liner will be kept on site.

(7) Products to be sold will be covered overnight or removed from the site and if required by State law, refrigeration will be provided.

(8) A roadside stand for the sale of farm products raised or produced on the premises shall be permitted provided such stands are located not less than 30 feet from any street, highway or right-of-way. A site plan will be submitted as part of the building permit process for a permanent structure or for the installation of electrical, water or rest room facilities. The applicable site plan shall be submitted as set forth in Article 2 of this Code.

E. Sites will be inspected by Code Enforcement Officers for cleanliness, litter, and to check leases and licenses. The conditions shall be recorded and used to determine the appropriate action to be taken if necessary, including issuance of a Code Violation Citation.

Sec. 4.3.13 Model home sales lot or model home complex.

A. This commercial development shall provide a paved parking lot with five parking spaces per model home. One parking space for the handicapped per model home or complex is required. The unit(s) must be handicapped accessible, have all utilities including telephone installed and shall be fully functional as a commercial development.

B. Upon cessation of use as a model home sales lot or model home complex, the model homes may be torn down and removed or the structures converted to office use. Signage shall meet the requirements for an on-site sign in accordance with Section 7.5 of this Code.

Sec. 4.3.14 Existing businesses in rural land area.

A. Industrial and commercial uses which were in existence as of April 7, 1994, shall be considered conforming uses. Expansion shall be allowed on property, with the same ownership, properly zoned and contiguous to the existing industrial or commercial use as of April 7, 1994.

B. Clear and convincing evidence proving the business to have been in existence on the specific site on or before April 7, 1994, shall be submitted to the Planning/Zoning Manager. Such evidence shall include but not be limited to copies of the following: copy of deed, occupational license, bills of sale for merchandise, invoices for services rendered, business tax returns, power company history of service in name of company, or other similar documentation.

Sec. 4.3.15 Well permits.

A. All new wells or wellfields, other than agricultural wells, which are capable of producing 100,000 gallons per day (G.P.D.) or that require Consumptive Use Permits from the appropriate water management district, are required to obtain a SUP from Marion County.

B. See Well Head Protection in Article 5 for additional requirements.

Sec. 4.3.16 Sale of goods outside of a building (temporary use).

A. The sale of goods or merchandise associated with a commercially zoned development by merchants in that development may be permitted as a temporary sales event for a limited period of time. A Temporary Use Permit shall be issued by the Planning/Zoning Manager upon receipt of a complete application and payment of a fee set by the Board of County Commissioners.

B. The Planning/Zoning Manager may issue temporary use permits for off-premise locations subject to the applicable restrictions set forth in this section.

(1) Temporary use permits for off-premise locations shall be restricted to those zoning districts in

which the sale of the items would normally be permitted.

(2) Written permission from the property owner shall be provided.

(3) No more than one temporary use permit per applicant and per site shall be issued in any 90 day period of time and shall not exceed a period of seven days.

(4) The Planning/Zoning Manager may stipulate any special conditions or restrictions consistent with the preservation of the public health, safety or welfare.

(5) The driveway apron must be permitted and constructed to the appropriate agencies specification.

(6) The provisions of this section shall not apply to roadside vendors meeting the provisions of Section 4.4.13.

(7) A violation of this section may be punished by a fine not to exceed $500.00 or by imprisonment in the County Jail not to exceed 60 days or by both such fine and imprisonment. Each day any violation of any provision of the Code shall continue shall constitute a separate offense.

(8) All sales of motorized vehicles shall be titled and registered in Marion County.

Sec. 4.3.17 Landfills. Construction and demolition landfills must be approved by a Comprehensive Plan Amendment and shown on the Future Land Use Map. See Springs Protection Overlay Zone for specific requirements within that zone.

Sec. 4.3.18 Family/guest cottage/apartment. This accessory non-commercial dwelling unit may be constructed on a concrete foundation or slab located in the rear or side yard of a principle dwelling except in the A-1, General Agriculture, zoning classification. The cottage which may be a removable, modular structure, or a conventionally constructed structure shall be compatible with the existing dwelling; it shall be designed as an independent living unit smaller than the primary structure, and may be connected to utility systems of the principal dwelling.

Sec. 4.3.19 Temporary storage of construction materials. Temporary storage of road construction materials, surplus material or clean fill from a county or state permitted roadway construction project may be allowed by a Temporary Use Permit issued by the Planning/Zoning Manager under the following conditions which are to be a part of the permit:

A. Written permission of the property owner,

B. Submittal of a sketch showing access to the storage site and location of storage area with photos attached,

C. Setback of storage area shall be a minimum of 50 feet from all property lines or the setbacks of the property's zoning classification, whichever is the greatest, and

D. The property shall be restored substantially to original condition within 90 days after completion of the project

Sec. 4.3.20 Homing pigeons.

A. The term homing pigeons shall include those pigeons which have been trained to return home including racing or carrier pigeons. Such pigeons and pigeon lofts in existence as of April 6, 2000, shall be considered conforming uses in the respective zoning classifications.

B. Pigeon lofts shall be used for the breeding and husbandry of pigeons. All pigeons shall be confined in a loft, except for limited periods necessary for exercise, training and competitions. Pigeons shall be fed within the confines of the loft.

C. Pigeon lofts are permitted uses in the A-1, General Agriculture, A-2, Improved Agriculture, or A-3, Residential Agricultural Estate zoning classification.

D. Pigeon’s lofts are allowed by right in residential zoning classifications on parcels of one acre or

greater.

E. Pigeon lofts may be located in all other zoning classifications by SUP.

Sec. 4.3.21 Parking of Commercial Vehicles

No person shall park a commercial vehicle in excess of 10,000 lbs. for more than three hours on private property, in any prohibited zoning classification, or in the right-of-way except:

(1) Vehicles engaged in the delivery or pickup of goods, or vehicles engaged in the delivery of materials to be used in actual bona fide repair, alteration, remodeling, or construction of any building or structure for which a building permit has previously been obtained or for the purpose of public works projects; or

(2) When the vehicle is parked in connection with and is owned or leased by an approved business in a non-residential zoning district, or when the vehicle is loading or unloading goods in connection with such a business and is parked adjacent to a loading dock or loading area for a period of time not to exceed forty-eight hours; or

(3) Ambulances (or other public service vehicles), tow trucks (26,000 lbs GVW or less), and other commercial vehicles that are used for life-safety emergency purposes on a 24-hour basis and which park on private property.

Sec. 4.3.22 Non-Conforming Uses

A. Intent. Within the County there exist uses of land which were lawful before this Code was passed, but which have been prohibited or restricted under terms of this Code.

It is the intent of this Code to permit these non-conforming uses to continue until they are removed or cease to exist, but not to encourage their survival. Non-conforming uses are declared by this Code to be incompatible with permitted uses in the zoning classification involved. It is further the intent of this Code that non-conforming uses shall not be enlarged, extended, or reconstructed to continue their use after major damage. Exceptions to this intent may be allowed for the restoration of historic structures or for the replacement of an existing dwelling that is the primary residence of the property owner.

B. Non-conforming use – Extension. Any non-conforming uses, which occupied a conforming building, or land or portion of a building or land shall not be extended to occupy any other part of the same conforming building or land within the same zoning classification. This section shall not apply to the excavation, screening, crushing, processing, storing or distributing of lime rock, phosphate, sand, gravel or clay within the same ownership or leasehold, where such activities were actively pursued within the three year period prior to June 11, 1992.

C. Repair, alteration, enlargement. A conforming structure or a portion of a conforming structure occupied by a non-conforming use may be:

(1) Improved and repaired in such a manner so as the improvements and repair shall not increase the cubical content or the floor area of the building or the portion of the building devoted to the non-conforming use.

(2) Enlarged or expanded if the enlargement or expansion is necessary to bring the structure into conformance with the Building Code and the enlargement or expansion cost does not exceed 50 percent of the assessed value of the structure.

(3) Nothing in this section shall prevent compliance with applicable laws relative to the safety and sanitation of a conforming building or portion of a conforming building occupied by a non-conforming use.

D. Reconstruction after catastrophe. Any building or portion of a building occupied by a non-conforming use, which is damaged by fire, flood, explosion, collapse, wind, war or other catastrophe to the extent that the cost of rebuilding, repair or reconstruction will exceed 120

percent of its assessed value at the time of the damage, shall not again be reconstructed for use by a non-conforming use. If the repair or reconstruction cost is less than one 120 percent of the assessed value, the building may be repaired or reconstructed for use by the existing non-conforming use.

E. Change of non-conforming use.

(1) There may be a change of tenancy, ownership or management of a non-conforming use provided there is no change in the nature or character of such non-conforming use except as may be permitted by this section.

(2) The change from a non-conforming use of land, to a conforming use of land is encouraged.

F. Discontinuance or abandonment of a non-conforming use.

(1) This restriction shall not apply to temporary cessation or discontinuance of uses involving excavation, screening, crushing, storing and distributing of lime rock, phosphates, sand or gravel or other rock or minerals within the same leasehold or ownership, where such uses were actively pursued within three years prior to June 11, 1992 and where such temporary cessation or discontinuance does not exceed a period of three years.

(2) If for any reason the occupancy of a building or part of a building by a non-conforming use, ceases or is discontinued for a period of 12 months or more, the building or portion thereof shall not thereafter be occupied by a non-conforming use.

(3) Any building, structure or land, or portion thereof, occupied by a non-conforming use which is changed to or occupied by a conforming use shall not thereafter be used or occupied by a non-conforming use.

(4) Any non-conforming junk yard shall be brought into conformity with all of the applicable provisions of Section 4.3.7 herein, except area and dimension requirements, where conformity is impossible (a) because of the size and dimensions of the parcel upon which the non-conforming use is located, or (b) without relocation of the principal building containing such non-conforming use.

G. Special uses not non-conforming uses. Any use which is permissible in a zoning classification as a special use under the terms of this Code shall not be deemed a non-conforming use in such classification, but shall without further action be considered to be a conforming use.

H. Casual or temporary use. The casual, temporary, or illegal use of land or a structure shall not be sufficient to establish the existence of a non-conforming use or to create any rights in the continuance of such a use. The legal change of a zoning classification or classification regulations is the only way to create a non-conforming use or to create any rights in the continuance of a non-conforming use of land.

Sec. 4.3.23 Non-Conforming Structures.

Where a lawful structure exists at the effective date of adoption or amendment of this Code that could not be built under the terms of this Code by reason of restrictions on area, lot coverage, height, yards, setbacks, or other characteristics of the structure or its location on the lot, such structures may be continued so long as they remain otherwise lawful, subject to the following provisions:

A. Such structures may be enlarged or altered provided the enlargement and alteration meets the requirements of this Code and does not increase the non-conformity.

B. Such structures existing as of the adoption of this Code, shall be permitted to be rebuilt and repaired in the event of destruction or damage by accident, fire, flood, explosion, collapse, wind, war or other catastrophe, provided the reconstruction does not increase the gross density or intensity of the property, shall meet other applicable codes, and does not increase the non-conformity.

C. Should such structure be moved for any reason for any distance whatever, it shall be required to

conform to the regulations for the zoning classification and overlay zone in which it is located after it is moved.

Sec. 4.3.24 Adult Entertainment Business.

A. The Board hereby finds as follows:

(1) The possession, display, exhibition, production, distribution and sale of books, magazines, motion pictures, video tapes, prints, photographs, periodicals, records, novelties and similar devices which depict, illustrate, describe or relate to specified sexual activities is a business that exists within the State of Florida.

(2) The operating and maintaining of places presenting dancers displaying or exposing specified anatomical areas are businesses that exist within the State of Florida.

(3) When the activities detailed in subsections (1) and (2) are present in an area, other activities tend to accompany them which are illegal, immoral or unhealthful, such as prostitution; lewd and lascivious behavior; exposing minors to harmful materials; possession, distribution and transportation of obscene materials; sale or possession of controlled substances; and violent crimes against persons and property; and these illegal, immoral or unhealthful activities tend to concentrate around and be aggravated by the presence of the activities detailed in subsections (1) and (2) above.

(4) Based upon evidence and testimony from the County's professional planners, the grouping together of the activities described above lowers property values, detracts from the aesthetic beauty of residential, commercial and institutional neighborhoods and is harmful to juveniles who congregate in such residential and institutional areas.

(5) Based upon evidence and testimony from the County's professional law enforcement officers, the grouping together of the activities described above creates an inordinate amount of concentrated crime in such areas.

(6) Also based upon evidence and testimony from the County's professional law enforcement officers, many of the types of establishments at which the activities described above occur are likely to attempt to locate in this County.

(7) Also based upon evidence and testimony from the County's professional law enforcement officers and the County's professional planners, the location of the activities described above near residential, institutional or other areas where juveniles often congregate lowers property values in such areas and exposes juveniles to the activities described in subsection (3) above.

(8) Based upon evidence and testimony received from the County's professional planners, there will be free and reasonable access for and to the regulated uses, and the limitations imposed herein will not preclude robust competition with other regulated uses.

(9) Based upon the experiences of other localities statewide and nationwide, the evidence and testimony of the County's professional planners and law enforcement officers appear to be correct.

B. Spacing requirements.

(1) A regulated use may not be established or continued in any permitted zoning classification unless all other requirements of this Code pertaining to such zoning classification and to buildings generally are met and unless the regulated use is at least:

(a) One thousand five hundred feet from any other regulated use;

(b) One thousand five hundred feet from any established church, public or private school, public and private playground or park; and

(c) One thousand five hundred feet from any area with a residential zoning classification.

(2) For purposes of the distance limitations, the measurement shall be made by extending a straight

line from the property line of the "regulated use" to the nearest property line occupied by any other regulated use or to the nearest property line of property owned by any church or school or to the nearest property line of any residential area, playground, or park.

C. Obscenity not permitted. Nothing in this section shall be construed as permitting or allowing a violation of any state or federal law, including Ch. 847 FS relating to obscenity.

D. Other uses "moving to" regulated use. Any use herein defined as a "regulated use" or an "adult and sexually-oriented business" which is established in conformity with this section and other applicable laws and ordinances shall not be made unlawful if, subsequent to the establishment and operation of such "regulated use," a church, or school acquires property or a playground, park or residential area is created or established within the distance limitations for the "regulated use" specified in this section.

E. Zoning classifications. All regulated uses and adult and sexually-oriented businesses shall be a permissible use in a B-5 and M-1 districts only, and only upon issuance of a SUP.

F. Adult theaters. The following special requirements shall apply to adult theaters, adult mini-motion picture theater or adult motion picture theater.

(1) If the adult theater contains a hall or auditorium area, the area shall comply with each of the following provisions:

(a) Have individual or separate seats, not couches, benches, beds, or the like, to accommodate the maximum number of persons who may occupy the area; and

(b) Have a continuous main aisle alongside of the seating areas in order that each person seated in the areas shall be visible from the aisle at all times; and

(c) Premises shall be equipped with overhead lighting fixtures of sufficient intensity to illuminate every place to which patrons are permitted access at an illumination of not less than one foot-candle as measured at floor level.

(d) It shall be the duty of the licensee, the owners, and operator and it shall also be the duty of any agents and employees present on the premises to ensure that the illumination described above is maintained at all times that any patron is present on the premises.

(2) If the adult theater contains adult booths, each adult booth shall comply with each of the following provisions:

(a) Have a sign posted in a conspicuous place at or near the entrance way which states that only one person may occupy the booth; and

(b) Have a permanently open entrance way for each booth not less than two feet eight inches wide and not less than seven feet high, which will never be closed or partially closed by a curtain, door, or other partition which would be capable of wholly or partially obscuring a person situated in the booth; no curtains, doors, or other partitions shall be affixed, attached, or connected to the permanently open entrance way of a booth; and

(c) Have one individual seat, not a couch, bench, or the like; and

(d) Except for the open entrance way of each booth, each booth shall have walls or partitions of solid construction without holes or openings in such walls or partitions; and

(e) Premises shall be equipped with overhead lighting fixtures of sufficient intensity to illuminate every place to which patrons are permitted access at an illumination of not less than one foot-candle as measured at floor level.

(f) It shall be the duty of the licensee, the owners, and operator and it shall also be the duty of any agents and employees present on the premises to ensure that the illumination described above is maintained at all times that any patron is present on the premises.

(3) If the theater has an area in which a private performance occurs, it shall:

(a) Have a permanently open entrance way not less than seven feet wide and not less than seven feet high, which entrance way will never be closed or partially closed by a curtain, door or other partition which would be capable of wholly or partially obscuring a person situated in the area; and

(b) Have a wall-to-wall, floor-to-ceiling partition of solid construction without holes or openings which partition may be completely or partially transparent and which partition separates the employee from the person viewing the display; and

(c) Have, except for the entrance way, walls or partitions of solid construction without holes or openings in such walls or partitions; and

(d) Have individual or separate seats, not couches, benches, beds, or the like, to accommodate the maximum number of persons who may occupy the area; and

(e) Premises shall be equipped with overhead lighting fixtures of sufficient intensity to illuminate every place to which patrons are permitted access at an illumination of not less than one foot-candle as measured at floor level.

(f) It shall be the duty of the licensee, the owners, and operator and it shall also be the duty of any agents and employees present on the premises to ensure that the illumination described above is maintained at all times that any patron is present on the premises.

G. Signage. Notwithstanding any provision of this Code, the Building Code or any County ordinance or regulation to the contrary, it shall be unlawful for any owner or operator of any regulated use or adult or sexually-oriented business or any other person to erect, construct, or maintain any sign for the regulated establishment other than one "primary sign" and one "secondary sign," as provided herein:

(1) Primary signs shall have no more than two display surfaces. Each such display surface shall:

(a) Not contain any flashing lights, moving parts or be constructed to simulate movement;

(b) Be a flat plane, rectangular in shape;

(c) Not exceed 75 square feet in area; and

(d) Not exceed ten feet in height or ten feet in length.

(2) Primary signs shall contain no photographs, silhouettes, drawings or pictorial representations of any manner, and may contain only:

(a) The name of the regulated establishment; and

(b) One or more of the following phrases:

1. Adult Bookstore
2. Adult Movie Theater
3. Adult Encounter Parlor
4. Adult Cabaret
5. Adult Lounge
6. Adult Novelties
7. Adult Entertainment
8. Adult Modeling Studio

(c) Primary signs for Adult Movie Theaters may contain the additional phrase, "Movie Titles Posted on Premises."

(3) Each letter forming a word on a primary sign shall be of a solid color, and each such letter shall be the same print-type, size and color. The background behind such letter on the display surface of a primary sign shall be of a uniform and solid color.

(4) Secondary signs shall have only one display surface. Such display surface shall:

(a) Be a flat plane, rectangular in shape;

(b) Not exceed 20 square feet in area;

(c) Not exceed five feet in height and four in width; and

(d) Be affixed or attached to any wall or door of the establishment.

(e) The provisions of Subsection G(1)(a) and Subsections G(2) and G(3) above shall also apply to secondary signs.

Sec. 4.3.25 Telecommunications Towers and Antennas.

A. Purpose and intent. The intent of this section is to provide standards and regulations for the location of telecommunication antennas and towers in the unincorporated area of Marion County. These regulations and requirements are adopted with the intent and purpose of protecting the health, safety, and welfare of the public; of encouraging users of towers and antennas to locate them, to the extent possible, in areas where the adverse impact on the community is minimal; of protecting residential areas, scenic roads, historical sites and other land uses from potential adverse impact of antennas and towers; to minimize adverse visual impact of antennas and towers through careful design, siting, and landscaping; to encourage users of towers and antennas to configure them in a way that minimizes the adverse visual impact of the towers and antennas; to promote and strongly encourage shared use (collocation) of existing towers and antenna support structures as a primary option rather than construction of additional single-use towers; to avoid potential damage to property caused by antennas and towers by ensuring such structures are soundly and carefully designed, constructed, modified and maintained; to ensure that antennas and towers are compatible with surrounding land uses; and to enhance the ability of the providers of telecommunication services to provide such services to the community quickly, effectively and efficiently.

B. Location priority:

(1) It is recognized that different wireless telecommunication services and providers have distinct geographical areas in which they must be located to provide their service, but it is also recognized that there is usually some flexibility in the type of antenna and type of support structure on which the antenna is to be located. Therefore, all antennas and towers subject to this section shall to the extent possible be located in accordance with the following prioritization of types of facilities and sites:

(a) Antennas on existing towers.

(b) Antennas on existing antenna support structures.

(c) Antennas on modified or reconstructed towers designed to accommodate the collocation of additional carriers as set forth in Section 5.9.8(d) & (e).

(d) Towers and antennas on limited replacement/modified light standards, power poles, or other such Antenna Support Structures in a non-residential zoning district (zoning districts other than R-1, R-2, R-3, R-4, RE and Residential PUD).

(e) Towers on property controlled and used by a governmental or quasi-governmental entity.

(f) New construction and new towers.

C. Permitted use. A communication tower meeting the requirements of this Section and Sections 4.3.27.E and 4.3.27.G shall be a permitted use of land requiring administrative review and administrative permit only. A communication tower allowed as a permitted use under this section shall be limited to a maximum of 150 feet in height and shall be a monopole tower. A communication tower which fails to meet the requirements of this section as a permitted use may be permitted by SUP issued by the Board.

(1) On designated County property

(2) On Federal, State, or municipal property

(3) On school sites as designated by the School Board

(4) On property with an industrially or commercially designated land use

(5) On property within an urban commerce district or specialized commerce district

(6) On new structures and replacement structures on electrical substation properties as long as the new structure is setback at least 75 percent of the height away from an existing residential structure and the new structure is no more than 150 feet in height.

D. Special Use Permit (SUP). No person shall erect or modify an antenna or an antenna support structure, construct a new tower, or modify an existing tower without first obtaining a SUP pursuant to this section, or an administrative permit as set forth herein. The Board is under no obligation to approve a SUP application unless and until the applicant meets their burden of demonstrating that the proposed use will not adversely affect the public interest, the proposed use is consistent with the Comprehensive Plan and the proposed use is compatible with land uses in the surrounding area. The Board's determination shall be based on substantial and competent evidence, documentation and testimony received at the public hearing including but not limited to the recommendation of the County Growth Services staff, the recommendation of the Planning & Zoning Commission, information and recommendation of County engineering consultants, information from the applicant and any party in support or opposition, or their respective representatives. In addition, the Board shall consider the following factors in determining whether to issue a SUP for a new tower, although the Board may waive or reduce the burden on the applicant of one or more of these criteria if the Board concludes that the goals of this section are better served thereby.

(1) Height of the proposed tower; surrounding topography; surrounding tree coverage and foliage; nature of uses on adjacent and nearby properties; proposed ingress and egress; and availability of suitable existing towers and other structures as set forth in this section.

(2) Proximity of the tower to residential structures and residential subdivision boundaries, including the amount of the tower that can be viewed from surrounding residential zones in conjunction with its proximity (distance) to the residential zone, mitigation landscaping, existing character of surrounding area, or other visual options proposed by the applicant;

(3) Proximity of the tower to public and private airports, including but not limited to the effect on the airport traffic pattern and visual and instrument approaches, orientation to the runway heading and type and volume of aircraft traffic operating at the airport.

(4) Design of the tower, with particular reference to design characteristics that have the effect of reducing or eliminating visual obtrusiveness, including the extent to which the tower is designed and located to be compatible with the nature and character of other land uses and/or with the environment within which the tower proposes to locate, the tower may be placed, designed or camouflaged to assist with mitigating the overall aesthetic impact of a tower;

(5) No new tower shall be permitted unless the applicant demonstrates to the reasonable satisfaction of the Board that no existing tower or antenna support structure can accommodate the applicant's proposed antenna. Evidence submitted to demonstrate that no existing tower or antenna support structure can accommodate the applicant's proposed antenna must be submitted with the application and may consist of any of the following:

(a) No existing towers or antenna support structures are located within the geographic area required to meet applicant's engineering requirements.

(b) Existing towers or antenna support structures are not of sufficient height to meet applicant's engineering requirements.

(c) Existing towers or antenna support structures do not have sufficient structural strength to

support applicant's proposed antenna and related equipment.

(d) The applicant's proposed antenna would cause electromagnetic interference with the antenna on the existing towers or antenna support structure, or the antenna on the existing towers or antenna support structures would cause interference with the applicant's proposed antenna.

(e) The fees, costs, or contractual provisions required by the owner in order to share an existing tower or antenna support structure or to adapt an existing tower or antenna support structure for sharing are unreasonable. Costs exceeding new tower development are presumed to be unreasonable.

(f) The applicant demonstrates that there are other limiting factors that render existing towers and antenna support structures unsuitable.

E. Development standards. The following development standards shall govern the application, consideration and issuance of administrative and SUPs. The applicant shall comply with the following conditions, unless the applicant can demonstrate that the goals of this section are better served by the waiver of these requirements.

(1) Setbacks and Locational Requirements. The following requirements shall apply to all towers including towers allowed as a permitted use under Section 4.3.27.C; provided, however, that the Board may reduce the requirements if the goals of this Section would be better served thereby.

(a) Setbacks from Parent Property Lines. Tower setbacks shall be measured from the base of the tower to the property lines of the parent parcel. The tower owner shall provide a lease or deed or recorded fall zone easement covering the certified fall radius, and all towers shall be located on a parcel in such a manner that in the event of collapse, the tower structure and its supporting devices shall be contained within the confines of the property lines of the parent parcel. The fall radius of the tower shall be determined and certified by a Florida Licensed Engineer. Structural Support devices such as peripheral anchors, guy wires or other supporting devices shall be located no closer than 25 feet from any property line of the parent parcel.

(b) Locational Requirements Relative to Off-Site Uses and Zoning. Towers shall meet the locational requirements set forth in the table below from adjacent and surrounding properties of the parent tract.

(c) If the owner of the property where the tower is to be located owns residential units thereon or on surrounding properties (or if such properties are owned by his or her parents or children and they have consented in writing), those units shall not be taken into consideration when calculating the setback and locational requirements in this section.

TABLE 4.3.25-1 Tower Locational Requirements

SEPARATION FROM	DISTANCE
Any adjacent or surrounding residential dwelling	150% of tower height
Any adjacent or surrounding residentially zoned land	100% of tower height
Any off-site agriculturally zoned land	100% of tower height
Public road rights-of-way	100% of tower height
Designated scenic roadways	100% of tower height

(2) Collocation. All new towers shall be designed and constructed to allow collocation of a minimum of two antennas for monopoles and four antennas for other towers. The tower owner/operator

shall submit executed collocation agreements or binding letters of intent for each collocation as support for granting the permit to locate the tower, if any. Collocation agreements or binding letters of intent shall be in a form acceptable to the Planning/Zoning Manager that shall provide that each of the additional users will be utilizing the tower upon its completion.

(3) Tower Clustering. Application for tower clustering shall be filed with the Growth Services Department and shall include a site plan showing the location and fall zone radius of each tower. The Growth Services Department shall prepare and forward a recommendation and supporting documents to the Board. The Board may approve or deny such site for tower clustering by adoption of a resolution, provided however, if one or more of the towers require a SUP, the resolution of approval shall be subject to issuance of the necessary SUP. Unless otherwise approved by the Board, towers shall be separated from each other a minimum distance equal to the certified fall radius.

(4) Landscaping and buffers. Landscaping of tower electrical control equipment facilities shall apply to those sites which are adjacent to or within 330 feet (straight line distance) of a residence or development. A planting area a minimum of four feet wide, around the outside perimeter of the fence around the tower compound shall be established. The area shall be planted with a hedge of native or ornamental evergreen shrubs at least 30 inches in height at planting and capable of growing to at least 40 inches in height within the first growing season. Plants shall be mulched using two inches of material. A drip or low volume/pressure irrigation system or other alternative means of insuring hearty growth of vegetation shall be utilized. These plant materials shall be designed and placed to effectively screen the view of the tower compound from adjacent property. Ornamental trees may be included in the design to achieve this goal. Landscape buffering on the parent parcel shall be installed along the portion of the parent parcel boundaries between the tower and off-site residentially zoned property as necessary to buffer residential property when vegetative buffers are non-existent or provide insufficient screening. Plant materials shall be designed and placed to screen the view of the tower compound. Ornamental trees may be included in the design to achieve this goal. Existing mature tree growth and natural land forms on the property shall be protected and preserved to the maximum extent possible. New trees shall be a minimum of two inches DBH and shall be container grown. Shrubs shall be a minimum of 18-24 inches in height. Plants shall be mulched using two inches of material. All plant material shall be maintained in perpetuity following final inspection and approval. Replacements shall be made annually and coordinated with the Planning/Zoning Manager or his designee. The Board may require a greater buffer where appropriate or waive or modify any or all of these requirements if the goals of this section would be better served thereby.

(5) Lighting. Towers shall not be artificially lighted except as required by the Federal Aviation Administration (FAA) or other applicable authority. If lighting is required, the County shall review the available lighting alternatives and approve the design that will cause the least disturbance to the surrounding views, including but not limited to installation of bottom shielding on all lights.

(6) Color. Towers shall either maintain a galvanized steel finish, or concrete, or be painted a color so as to reduce visual obtrusiveness, subject to any applicable standards of the FAA, except for camouflage towers. The wiring conduit and coaxial cable shall be designed or painted to reduce visual obtrusiveness.

(7) Buildings. At the tower site, the design of the building and related structures shall, to the extent possible, use materials, colors, textures, screening, and landscaping that will blend the tower facilities to the natural setting and built environment. Outdoor storage is not permitted at a tower site.

(8) Antenna. If an antenna is installed on a structure other than a tower, the antenna and supporting electrical and mechanical equipment must be of a color that is identical to, or closely

compatible with, the color of the supporting structure so as to make the antenna and related equipment as visually unobtrusive as possible.

(9) Signage. No signage shall be allowed on any tower, except as required for public safety purposes, or by the Federal Communication Commission (FCC).

(10) Security fencing. Towers shall be enclosed by security fencing not less than six feet in height and shall also be equipped with an appropriate anti-climbing device; provided, however, that the Board may waive such requirements, as it deems appropriate.

(11) Inventory of existing sites. In order to encourage collocation of facilities, the Growth Services Department shall maintain a current map of all existing towers and all antenna support structures on which an antenna has been located. To prepare and maintain such a map, at the time of its first application after the effective date of this ordinance, each applicant for an antenna and or new tower shall provide to the Growth Services Department an update of the inventory of the communications company's existing towers and antennas and approved towers that are either within Marion County or within one-quarter mile of the border thereof including municipal boundaries, including specific information about the location (including longitude, latitude, and State Plane Coordinates), height, and design of each tower. The Growth Services Department may share such information with other applicants applying for administrative approvals or SUPs under this ordinance or other organizations seeking to locate towers or antennas within the jurisdiction of the Board, provided, however, that the Growth Services Department is not, by sharing such information, in any way representing or warranting that such sites are available or suitable.

(12) Federal requirements. All towers must meet or exceed current standards and regulations of the FAA, the FCC, and any other agency of the federal government with the authority to regulate towers and antennas. If, upon inspection, the Board concludes that a tower fails to comply with such codes and standards and constitutes a danger to persons or property, then upon notice being provided to the owner of the tower, the owner shall have 30 days to bring such tower into compliance with such standards. If the owner fails to bring such tower into compliance within said 30 days, the Board may remove such tower at the expense of the owner and/or landowner.

(13) Building Codes; Safety Standards. To ensure the structural integrity of towers, the owner of a tower constructed after April 28, 1998 shall ensure that it is constructed and maintained in compliance with EIA/TIA 222-E Standard, as published by the Electronic Industries Association, which may be amended from time to time, and all standards contained in the County building code and the applicable standards for towers that are published by the Electronic Industries Association, as amended from time to time. If, upon inspection, the Board concludes that a tower fails to comply with such codes and standards and constitutes a danger to persons or property, then upon notice being provided to the owner of the tower, the owner shall have 30 days to bring such tower into compliance with such standards. If the owner fails to bring such tower into compliance within said 30 days, the Board may remove such tower at the expense of the owner and/or landowner.

(14) Public notice. For purposes of this section, any SUP for a tower shall require public notice to all abutting property owners and all owners of property that are located within 500 feet of the perimeter of the parent parcel upon which the proposed communication tower is located, including municipalities within one mile of the proposed site and notice to owners of private and public airports within a two mile radius of the proposed site. Failure of a municipality to respond within 30 days after notification shall be interpreted as no objection.

F. Permit application. An applicant requesting a new tower permit, a permit to modify an existing tower, or a permit for a new antenna on an antenna support structure or a tower shall include the following:

(1) Information Required. Each applicant requesting a SUP shall submit a complete application as set forth herein, including a scaled site plan and a scaled elevation view and other supporting drawings, calculations, and other documentation, signed and sealed by appropriate licensed professionals, showing the location (including longitude, latitude and State Plane Coordinates) and dimensions of all improvements, including information concerning topography, radio frequency coverage, geographical area required to meet applicant's engineering requirements (applicant's search ring), tower height requirements, setbacks, drives, parking, fencing, landscaping, adjacent uses, and other information deemed by the Board to be necessary to assess compliance with this section. Any information of an engineering nature that the applicant submits, whether civil, mechanical, or electrical shall be certified by a licensed professional engineer. For new towers only, a site plan (20 copies) drawn to scale. The Planning/Zoning Manager shall provide a checklist of items required for the site plan. The site plan shall also include the criteria pursuant to this section;

(2) The height of the proposed or modified tower or antenna support structure (including the antenna);

(3) For new towers only, the location of the proposed new tower, antenna support structure or modified tower, placed upon an aerial photograph possessing a scale of not more than one inch equals 660 feet (1" = 660'), indicating all adjacent land uses within a radius of 3,000 feet from all property lines of the proposed tower location site. For a permit to modify an existing tower, written documentation that the modified tower can accommodate collocation and will not exceed 40 feet over the tower's existing height. For a new antenna on an antenna support structure or tower, a description of the antenna and antenna support structure with technical reasons concerning its design.

(4) For new towers only, the names, addresses and telephone numbers of all owners of the proposed tower and the location of other towers or usable antenna support structures within a one-half mile radius of the proposed new tower site, and within the geographic area required to meet applicant's engineering requirements (applicant's search ring), including property zoned GU and property that is owned by a government entity within one mile radius of the proposed site, which meets the requirements of Section 4.3.27.C.

(5) For new towers only, written approval or a statement of no objection from the FCC, FAA and other state and federal government agencies that regulate towers. In addition, all applications for new towers within a two mile radius of a public or private airport shall demonstrate that the tower location will not interfere with or obstruct the flight path of the airport.

(6) For new towers only, written documentation demonstrating that the applicant made diligent efforts for permission to collocate on towers, or usable antenna support structures or locate on County owned property located within the applicant's search ring and within a one mile radius of the proposed site, which meets the requirements of Section 4.3.27.C.

(7) A description of the tower, or antenna and antenna support structure with technical reasons concerning its design.

(8) For new and replacement towers only, written documentation from a qualified radio frequency engineer that the construction and placement of the tower will not interfere with public safety communication and the usual and customary transmission or reception of radio, television, or other communication service.

(9) Written, technical evidence from an engineer(s) that the proposed antenna tower or structure meets the structural requirements standards as defined in this section. The applicant is required to submit the necessary building plans to the building department.

(10) For new towers only, if volatile, flammable, explosive or hazardous material (such as LP gas, propane, gasoline, natural gas, corrosive or other dangerous chemicals) except standard battery

backup systems typically used in the telecommunication industry, are present on the site or in proximity thereto, written technical evidence from a qualified engineer(s) acceptable to the fire marshal and the building official that such material is properly stored consistent with applicable Codes and does not pose an unreasonable risk of explosion, fire or other danger to life or property.

(11) For new towers only, 20 copies of the final written report of all experts which the applicant will rely upon to support its application. The applicant may supplement such reports during the public hearing process to address additional issued raised at the public hearings.

(12) Payment of all permit fees, as well as other fees and charges assessed by the County (e.g. fees for building permits, site plan review, etc.). The applicant shall pay any reasonable additional costs incurred by the County in processing the application including, without limitation, compensation for engineers (including radio frequency engineers) or other technical consultants retained by the County.

G. Administrative permit. No person shall erect or modify an antenna on an antenna support structure, construct a new tower as a permitted use, or modify an existing tower without first obtaining an administrative permit pursuant to this section. The Planning/Zoning Manager shall issue administrative permits consistent with the requirements of this section, and Sections 4.3.27.B, 4.3.27.C, 4.3.27.E, and 4.3.27.G. An application for an administrative permit shall be in writing and in such form and content necessary to justify the permit. Within 15 days of receiving an application or a supplement to a pending application, the Planning/Zoning Manager shall determine and notify the applicant whether the information in the application is sufficient or shall request any additional information needed. The applicant shall either provide the additional information requested or shall notify the Planning/Zoning Manager in writing that the information will not be supplied and the reasons therefore. If the applicant does not respond to the request for additional information within 60 days, the application shall be deemed to be withdrawn. Within 30 days after acknowledging receipt of a sufficient application, or of receiving notification that the information will not be supplied, the Planning/Zoning Manager shall grant or deny the application. If the Planning/Zoning Manager denies the application for an administrative permit, the applicant may appeal such denial to the Board of Adjustment. The following uses may be approved in writing by the Planning/Zoning Manager or his designee after submission of a complete application, an administrative review and issuance of an administrative permit:

(1) Towers allowed as a Permitted Use.

(2) Installing an antenna on an existing structure other than a tower (such as a building, light pole, water tower, or other free-standing nonresidential structure) that is 50 feet in height or greater, so long as said additional antenna adds no more than 40 feet to the height of the originally approved structure.

(3) Installing an antenna on any existing tower of any height, including the placement of additional equipment buildings or other supporting equipment used in connection with said antenna, so long as the addition of said antenna adds no more than 40 feet to the height of the originally approved tower.

(4) Replacement Towers, Antenna Support Structures or Tower Modifications meeting the requirements of this section. A communication tower may be modified or reconstructed to accommodate the collocation of an additional communication antenna by administrative permit and shall be subject to the following provisions:

(a) The modified or replacement structure shall be either of the same tower type as the existing communication tower or a monopole tower that is replacing an existing lattice or guyed tower, not to exceed 40 feet above the original structure height.

(b) An existing communication tower may be modified or rebuilt to a taller height, not to exceed

40 feet over the tower's original height, to accommodate the collocation of additional communication antennas.

(c) The modified or replacement structure shall be exempt from any of the separation requirements set forth in Section 4.3.27.E(1).

(5) An existing transmission line tower or pole-type Antenna Support Structure (such as utility structure/pole) may be modified or replaced by administrative permit to allow for the collocation of additional antenna(s), providing the following criteria are met. If the following criteria cannot be met, an existing pole-type Antenna Support Structure may be modified or replaced by SUP.

(a) The communication antenna attached to the existing electrical transmission tower or pole-type structure or replacement monopole shall not extend above the highest point of the pole-type structure or replacement monopole more than 40 feet, as measured from the height of the original pole-type structure and the modified or replaced structure shall not exceed a height of 150 feet.

(b) If the resulting structure/tower adds additional height over the original pole-type structure, the closest residential structure shall be located a distance of at least 150 percent the height of the structure/tower from the base of the pole-type structure or replacement tower.

(c) If no additional height over the height of the original pole-type structure is added by either

1. The attachment of the communication antenna to the existing pole-type structure, or
2. The replacement tower including the communication antenna, then the structure/tower is permitted with no additional distance separation or setback from residential structures over that which was provided by the original pole-type structure.

(d) The communication antenna and support structure comply with all applicable FCC and FAA regulations.

(e) The communication antenna, pole-type structure, and/or replacement monopole tower comply with all applicable building codes.

(f) Pole-type structures (i) within public road rights-of-way, or (ii) if used for power distribution shall be eligible for use under this subsection. Notwithstanding the foregoing sentence, pole-type structures within front yard, side yard or rear yard residential subdivision easements are not eligible for use under this subsection.

(g) In the event that the utility pole or structure is abandoned for its initial/primary use as a utility pole, the secondary use as a communication tower shall also cease to operate and the structure and communication antenna removed.

H. Abandonment of communication towers:

(1) Compelling public interest. The Board finds and declares that, because of the national public policy of ensuring that the wireless communications industry and its evolving new technologies are accommodated notwithstanding the undesirable effects that communication towers may have on the aesthetics of communities and neighborhoods, there is a compelling public interest in ensuring that communication towers are promptly disassembled, dismantled, and removed once they are no longer being used. Further, the Board finds that there is substantial risk that towers may cease being used in large numbers if there is a concentration or consolidation of competitors within the industry or if even newer technologies arise, obviating the need for towers.

(2) Abandonment. In the event the use of any communication tower has been discontinued for a period of 180 consecutive days, the tower shall be deemed to be abandoned. Determination of the date of abandonment shall be made by the Planning/Zoning Manager, who shall have the right to request documentation and/or affidavits from the communication tower

owner/operator regarding the issue of tower usage. Failure or refusal for any reason by the owner/operator to respond within 20 days to such a request shall constitute prima facie evidence that the communication tower has been abandoned. Upon a determination of abandonment and notice thereof to the owner/operator, the owner/operator of the tower shall have an additional 180 days within which to:

(a) Reactivate the use of the tower or transfer the tower to another owner/operator who makes actual use of the tower within the 180 day period, or

(b) Dismantle and remove the tower. At the earlier of 181 days from the date of abandonment without reactivation or upon completion of dismantling and removal, any approval for the tower shall automatically expire.

(3) Duty to Remove Abandoned Towers. Notwithstanding the provisions of subsection (2), upon abandonment of a communication tower as determined under subsection (2) by the Planning/Zoning Manager and the failure or refusal by the owner/operator of the tower to either reactivate the tower or dismantle and remove it within 180 days as required by subsection (2), the following persons or entities (the "responsible parties") shall have the duty jointly and severally to remove the abandoned tower.

(a) The owner of the abandoned tower (and, if different, the operator of the abandoned tower);

(b) The owner of the land upon which the abandoned tower is located;

(c) The lessee, if any, of the land upon which the tower is located;

(d) The sublessee or sublessees; if any, of the land upon which the tower is located;

(e) Any communication service provider who or which by ceasing to utilize the tower or otherwise failing to operate any of its transmitters or antennas on the tower for which it leased space or purchased the right to space on the tower for its transmitters or antennas and such ceasing or failure to utilize the tower in fact caused the tower to become abandoned;

(f) Any persons to whom or entity to which there has been transferred or assigned any license issued by the Federal Communications Commission and under which the tower owner/operator operated the tower.

(g) Any person or entity which has purchased all or a substantial portion of the assets of the tower owner or operator;

(h) Any entity which has merged with, or which has arisen or resulted from a merger with, the tower owner or operator;

(i) Any person or entity which as acquired the owner or the operator of the abandoned tower;

(j) Any parent or subsidiary of any of the foregoing which happens to be a corporation;

(k) Any managing partner of any of the foregoing which happens to be a limited partnership; and

(l) Any partner of any of the foregoing which happens to be a general partnership

The abandoned tower shall be removed on or before then ninetieth day after receipt by the responsible party or parties of a notice from the Planning/Zoning Manager ordering its removal. The duty imposed by this paragraph shall supersede and otherwise override any conflicting provision of any contract, agreement, lease, sublease, license, franchise or other instrument entered into or issued on and after May 3, 1998.

Sec. 4.3.26 Electrical Substations.

A. Prior to, or at a minimum along with submittal of an application to locate a new distribution electric substation in residential areas, the utility shall provide to the Development Review Committee (DRC) information regarding the utility's preferred site together with a minimum of three alternative

available sites, including sites within nonresidential areas, that are technically and electrically reasonable for the load to be served. Nonresidential areas are considered proposed sites which are bounded on all sides by other than residential lands. Residential areas are considered proposed sites which are bounded on any one side by residential lands.

B. DRC shall make the final determination on the site application as to the preferred and alternative sites within 90 days of presentation of all the necessary and required information on the preferred site and on the alternative sites.

C. In the event the utility and DRC are unable to reach agreement on an appropriate location, the substation site selection and all addition information provided shall be submitted to the Board for review and determination of the site selection.

D. In the event the utility and the Board are unable to reach agreement on an appropriate location, the substation site selection shall be submitted to mediation in accordance with the provisions of § 163.3208(6)(a) FS.

E. Electrical substation in residential areas.

(1) Electric substations in residential areas shall provide for year-round visual screening and buffering which will minimize adverse impacts on neighboring properties. A landscape and buffering site plan prepared by a registered landscape architect shall be provided which addresses visual, light and sound intrusion into the neighboring properties.

(2) Setbacks from the substation property boundary to any permanent equipment or structure located on the substation property shall be a minimum of 100 feet. Within the 80 feet immediately adjacent to the substation property boundary, the setback shall be an open green space and shall include at a minimum native landscaping material and five medium trees (30-40 feet in height at maturity) per each 100 linear feet of property boundary. The remainder of the setback area, being a minimum of 20 feet lying immediately adjacent to the permanent equipment/structure area of the substation property, shall be an open green space buffer, and shall include at a minimum, native landscaping and a continuous hedge. Trees shall be planted so as to provide a visual screen and may be staggered to present a more natural setting. Vegetated buffers or screening beneath aerial access points to the substation equipment shall not be required to have a mature height in excess of 14 feet. A security fence or wall, eight feet in height and surrounding the substation equipment/structure area shall be constructed between the permanent equipment/structure area and the continuous hedge.

(3) In the event the substation parcel of land is of a size in which the buffer area along one or more boundaries would exceed the 100 foot minimum, the equipment/structure area shall be shifted to provide the maximum separation between the equipment area and property boundaries adjacent to residential uses.

(4) Ground and building lighting, if any, shall be limited to the permanent equipment/structure area, and shall be shielded to cast light down on the substation property and not onto adjacent properties. The maximum height of a light pole shall be 20 feet.

(5) Electric substations shall be prohibited in the conservation and natural reservation land use categories.

F. Electrical substations in non-residential areas.

(1) Electric substations in non-residential areas shall provide for year-round visual screening and buffering which will minimize adverse impacts on neighboring properties. A landscape and buffering site plan prepared by a registered landscape architect shall be provided which addresses visual, light and sound intrusion into the neighboring properties.

(2) Buffer areas from the substation property boundary to any permanent equipment or structure located on the substation property shall be a minimum of 25 feet and shall include a Land

Development Code, Type B buffer (currently a minimum width of 25 feet, with a minimum of 5 trees and 30 shrubs per 100 linear feet with a wall). Trees shall be planted so as to provide a visual screen and may be staggered to present a more natural setting. Vegetated buffers or screening beneath aerial access points to the substation equipment shall not be required to have a mature height in excess of 14 feet. The permanent equipment/structure area shall be surrounded by an eight foot high security fence or wall.

(3) Ground and building lighting, if any, shall be limited to the permanent equipment/structure area, and shall be shielded to cast light down on the substation property and not onto adjacent properties. The maximum height of a light pole shall be 20 feet.

(4) Electric substations shall be prohibited in the conservation and natural reservation land use categories.

Division 4 Advertising Signs

Sec. 4.4.1 General Provisions.

A. Relationship to building and electrical codes. These sign regulations are intended to complement the requirements of the building and electrical codes adopted by the Board. Wherever there is inconsistency between these regulations and the building or electrical code, the more stringent requirement shall apply.

B. No defense to nuisance action. Compliance with the requirements of these regulations shall not constitute a defense to an action brought to abate a nuisance under the common law.

C. Maintenance.

(1) All signs, including their supports, braces, guys and anchors, electrical parts and lighting fixtures, and all painted and display areas, shall be maintained in accordance with the building and electrical codes adopted by Marion County.

(2) Exposed surfaces shall be cleaned and finished. Defective parts shall be replaced. The Planning/Zoning Manager shall have the right under Section 4.4.F, to order the repair or removal of any sign which is defective, damaged or substantially deteriorated. All decisions of the Planning/Zoning Manager are appealable to the Board of Adjustment.

(3) The vegetation around, in front of, behind, and underneath the base of ground signs for a distance of ten feet shall be neatly trimmed. No rubbish or debris that would constitute a fire or health hazard shall be permitted under or near the sign.

D. Permitting:

(1) No person may engage in the business of erecting, altering, relocating, or constructing a sign, without a valid Contractor's License and all required State or Federal licenses.

(2) A sign company wishing to install, either or both, on-site or off-site signs shall submit an application to the Planning/Zoning Manager and the Building Manager on a form supplied by the County.

(3) The application form shall be accompanied by a site plan conforming to the requirements set forth in Articles 2 and 6 for a minor site plan. The applicant shall also provide construction and installation details meeting the requirements of Section 4.4.E.

Upon review and approval by the Growth Services Department and the Building Department, a permit shall be issued. The permit number shall be attached to the sign structure using the following size letters and numbers in a location where it is readily visible for inspection:

TABLE 4.4.1-1 Sign Lettering

Wall signs	1 inch
Under canopy signs	¾ inch
On-site signs	1½ inch
Off-site signs	3 inch

E. Inspection and removal of signs:

(1) Any sign which is located on or adjacent to the right-of-way of any county road, which was erected without the permit required in Section 7.1.4, after adoption of this Code, is declared illegal and shall be properly permitted or removed as provided herein.

(2) Any sign which is determined by the Planning/Zoning Manager to be defective, damaged, unsafe, or substantially deteriorated or abandoned, shall be repaired or removed as provided herein.

(3) Upon a determination by the Planning/Zoning Manager that a sign is in violation of this Code, the Code Enforcement Division shall prominently post on the sign face a notice stating that the sign is illegal, defective, damaged, unsafe or substantially deteriorated or abandoned and must either be brought into conformity with this Code or must be removed within 30 days after the date on which the notice was posted. If the sign bears the name of the licensee or the name and address or the telephone number of the sign owner, the Code Enforcement Division shall, concurrently with and in addition to posting the notice on the sign, provide a written notice to the owner stating the sign is illegal, defective, damaged, unsafe or substantially deteriorated and must be brought into conformance with the Code or permanently removed within the 30 day period specified on the posted notice or a permit obtained for the sign and payment of twice the stipulated fee as penalty. The written notice shall further state that the sign owner has a right to request a hearing before the Code Enforcement Board. Said request must be filed with the Planning/Zoning Manager within 30 days after the date of the written notice. The filing of the request for a hearing will stop the removal of the sign until a decision is reached by the Code Enforcement Board. Should the notice for removal be upheld by the Code Enforcement Board, the owner shall remove the sign within 30 days after the hearing or the County may remove the sign without further notice and without incurring any liability as a result of such removal. The cost of removing the sign may be assessed against the owner of the sign by the Code Enforcement Division.

(4) If, pursuant to the notice provided, a permit for the sign is not obtained, or a hearing is not requested by the sign owner, or the sign is not removed by the sign owner within the prescribed period, the Code Enforcement Board shall refer the matter to the Board. At its option, the Board may either:

(a) Accept the findings and order of the Code Enforcement Board, and direct the County Administrator to cause the abandoned sign to be removed; or

(b) After giving Due Public Notice to intended parties, hold an additional hearing. At the conclusion of said additional hearing, the Board may either:

1. quash the order of the Code Enforcement Board; or
2. grant up to 60 days additional time for the performance of remedial acts; or
3. direct the County Administrator to cause the sign to be removed. The decision as to whether to hold such an additional hearing rests solely with the Board. Nothing contained herein shall be deemed to give any interested party a right to any hearing in addition to that held by the Code Enforcement Board.

(5) A notice to the sign owner shall constitute sufficient notice and additional notice is not required to be provided to the lessee, advertiser, or the owner of the real property on which the sign is located.

F. Signage requirements for adult and sexually oriented businesses: These requirements are located in Article 4.3.26.

Sec. 4.4.2 Exempt signs

The following signs are exempt from the regulatory and permitting requirements of this Code. Exempt signs shall not be located or constructed so that they create a hazard of any kind.

(1) Signs that are designed or located to be invisible from any street or adjoining property

(2) Signs necessary to promote health, safety and welfare, and other regulatory, statutory, traffic control or directional signs erected on public property with permission of the State of Florida, the Federal government, or the County of Marion

(3) Legal notices and official instruments of governmental agencies

(4) Decorative flags and bunting for a ceremonial purpose when authorized by the Planning/Zoning Manager for a prescribed period of time, not to exceed 30 days.

(5) Holiday lights and decorations

(6) Merchandise displays behind storefront windows.

(7) Memorial signs or tablets, names of buildings and dates of erection when cut into any masonry surface or when constructed of bronze or other incombustible materials and attached to the surface of a building.

(8) Signs incorporated into machinery or customarily affixed to machinery or equipment such as vending machines, newspaper racks, telephone booths, and gasoline pumps.

(9) Advertising and identification signs located on taxicabs, buses, trailers, trucks, or vehicle bumpers. (See Section 7.4.2.q. below)

(10) Public warning signs to indicate the dangers of trespassing, swimming, animals or similar hazards

(11) Signs carried by a person

(12) Political signs. Political signs proposed to be located in a residential zoning classification shall not exceed eight square feet and shall be located behind the property line. Political signs proposed to be located in all other zoning classifications shall not exceed 32 square feet and shall be located behind the property line. Said signs may be placed or erected on private property with the permission of the owner, except in the sight triangle which occurs on the corners of intersecting streets or on the corners of driveways. Refer to Section 5.5.16. Signs exceeding 32 square feet in size shall obtain a sign permit.

Signs shall not be placed or erected in the public right-of-way or on utility poles located on public right-of-way. When edge of right-of-way is questionable, signs shall be located behind power poles or fence lines.

County shall have the right to immediately remove any and all signs in the sight triangle, in the right-of-way and on utility poles located in the right-of-way in order to protect the life and safety of the traveling public and utility company employees.

All signs shall be removed within two weeks after the final election date of each candidate or issue.

Sec. 4.4.3 Prohibited signs.

A. Generally. It shall be unlawful to erect, cause to be erected, or maintain any sign not specifically authorized by, or exempted from, this Code.

B. Specifically. The following signs are prohibited unless exempted by Section 4.4.2 of this Code or expressly authorized by Sections 4.4.4.E and 4.4.4.F7.6 of this Code:

(1) Any sign that, in the opinion of the Planning/Zoning Manager and the Building Safety Director, does or will constitute a safety hazard.

(2) Blank temporary signs.

(3) Signs with lights or illuminations that flash, move, rotate, scintillate, blink, flicker, or vary in intensity or color except for time-temperature date signs and electronic message boards. (See Section 4.4.4.C(3).

(4) Signs, commonly referred to as wind signs, consisting of one or more banners, pennants, ribbons, spinners, streamers or captive balloons, or other objects or material fastened in such a manner as to move by force of wind. These signs may be permitted under Section 4.4.4.B(6) as temporary signs for special sales events and shall be securely anchored.

(5) Signs that incorporate projected images (movies, slides, etc.), emit any sound that is intended to attract attention, or involve the use of live animals.

(6) Signs or sign structures that interfere in any way with free use of any fire escape, emergency exit, or standpipe.

(7) Signs that obstruct any window to such an extent that light or ventilation is reduced to a point below that required by the Building Code or that obstructs the vision of the cashier from the exterior of a building by a Sheriff's Deputy or Code Enforcement Officer.

(8) Signs that resemble any official sign, flag, or marker erected by any governmental agency, or that by reason of position, shape or color, would conflict with the proper functioning of any traffic sign or signal, or be of a size, location, movement, content, color, or illumination that may conceal or be reasonably confused with or construed as a traffic-control device.

(9) Signs that obstruct the vision of pedestrians, cyclists, or motorists traveling on or entering public streets.

(10) Non-governmental signs adjacent to the right-of-way of any county road that use only the words "stop," "look," "danger," or any similar word, phrase, or symbol which implies the need or requirement of stopping or the existence of danger.

(11) Signs, within ten feet of public right-of-way or 100 feet of traffic-control lights, that contain red or green lights which might be confused with traffic control lights.

(12) Signs of such intensity or brilliance to cause glare or impair the vision of any motorist, cyclist, or pedestrian using or entering a public way, or that are a hazard or nuisance to occupants of adjacent property because of height and glare.

(13) Signs that contain any lighting or control mechanism that causes unreasonable interference with radio, television or other communication signals.

(14) Signs that are painted, pasted, or printed on any curbstone, flagstone, pavement, or any portion of any sidewalk or street, except house numbers and traffic control signs.

(15) Signs erected on public property or right-of-way or on private utility poles located on public right-of-way except signs erected by governmental entities for public purposes.

(16) Signs erected over or across any public street except those expressly authorized by this Code.

(17) Vehicle signs with a total sign area on any vehicle in excess of 12 square feet, when the vehicle:

(a) Is visible from the street right-of-way and is parked for more than one hour within 100 feet of any street right-of-way; and

(b) Is not regularly used (cannot be started and used once a week) in the conduct of the business advertised on the vehicle. A vehicle used primarily for the purpose of providing transportation for owners or employees of the business concern advertised on the vehicle, on the site of the

business, shall be considered a vehicle used in the conduct of the business.

(18) Portable signs as defined by this Code except as allowed in Section 4.4.4.B of this Code.

(19) Signs which are not placed by the property owner and are nailed, fastened or affixed to any tree, stone, fence, stump, utility pole, mile board, danger sign, guide sign, guide post, highway sign, historical marker, fence post, or other object or structure adjacent to a public right-of-way or within 50 feet of a public right-of-way excluding trespassing signs and markers.

Sec. 4.4.4 On-site signs.

A. Signs not requiring permits:

(1) Construction signs of 64 square feet or less

(2) Direction or information signs of six square feet or less

(3) Name plates of four square feet or less

(4) Public signs or notices, or any sign relating to an emergency

(5) Real estate signs of 64 square feet or less

(6) Temporary window signs placed on inside of windows which do not cover more than 50 percent of the window area

(7) Posted notices, No Trespassing signs or markers

B. Temporary signs:

(1) Except as indicated above, no temporary signs shall be erected without obtaining a permit. Signs failing to comply with the requirements of this section are illegal and subject to immediate removal.

(2) A temporary sign may be a ground or building sign.

(3) Real estate signs indicating that a property owner is actively attempting to sell, rent or lease the property on which the sign is located. (Refer to Section 4.4.4.d(12)(a), for size, height and number of signs allowed.)

(4) Signs indicating the grand opening of a business. This signage may be displayed for a period not exceeding ten days within the first three months the business is open.

(5) Signage indicating the existence of a new business, or a business in a new location, pending installation of permanent signs. Such signage may be displayed for a period of not more than 60 days or until installation of permanent signs, whichever shall first occur.

(6) Signage indicating the opening of a new business or a special sales event including but not limited to search lights, banners exceeding 36 square feet in size, and portable signs. This signage shall be granted a temporary permit not exceeding 30 days within the first three months the business is open or for a period not to exceed 21 consecutive days per event for temporary sales events. This type of signage is limited to four events per year. When more than one portable sign is placed on a property they shall be spaced 100 feet apart.

(7) Construction signage shall not be displayed more than 60 days prior to the beginning of actual construction of a project and shall be removed when construction is completed. Should construction be discontinued for any reason, for a period of more than 60 days, the signage shall be removed pending resumption and continuation of construction activities.

(8) Signage announcing or advertising such temporary uses as fairs, carnivals, circuses, revivals, sporting events, flea markets, or any charitable, educational, public or religious event or function. The Planning/Zoning Manager shall maintain a record of each applicant's performance in obtaining permits and removing signs as a basis for issuing future permits. Such signage shall be professionally made and shall be removed within five days after the conclusion of the special event. The construction and installation shall meet the wind load requirements of the Building

Code. Maximum size shall not exceed 64 square feet.

C. Permanent signs.

(1) Permanent signs may be a ground or building sign.

(2) No person shall erect or place any commercial sign upon benches, transit shelters or waste receptacles of 55 gallons or less, or be placed on the County road right-of-way without obtaining approval from the Board.

(3) Electronic message signs and Time Temperature Date Signs are permitted on commercially developed parcels. These signs shall display information in an easily comprehensible way. The information shall be visible for a minimum of three seconds and shall be kept accurate. They may be ground or building signs, and are subject to the regulations applicable to such signs. They shall be counted as part of an occupant's allowable sign area.

(4) Directional signs are limited in area to six square feet, giving directions to motorists regarding the location of parking areas and access drives. They shall be allowed as permanent signs on all parcels and shall not be counted as part of an occupant's allowable sign area.

(5) Entrance signs. A permanent accessory sign may be displayed at the entrance to residential developments, farms and ranches. Refer to 4.4.4.E for residential development sign setbacks.

(a) Restrictions.

1. An entrance sign is permitted at only one entrance into the development, farm or ranch from each abutting street. The sign may be a single sign with two faces of equal size or may be a single face sign located on each side of the entrance. No single face of the sign shall exceed 64 square feet in size with a maximum total size of 128 square feet and may be illuminated by a steady light source only.

2. When considering the placement of such signs, the Planning/Zoning Manager shall consider the location of public utilities, sidewalks and future street widening.

3. The Planning/Zoning Manager shall ensure that such signs shall be maintained perpetually by the developer, the owner of the sign, a pertinent owner's association, or some other person who is legally accountable under a maintenance arrangement approved by the Planning/Zoning Manager. If no accountable person accepts legal responsibility to maintain the signs and no other provision has been made for the maintenance of them, the signs shall be removed by the developer or owner.

(6) Flags.

(a) Number. No more than three flags or insignias of, religious, charitable, fraternal or other organizations may be displayed on any one parcel of land. Cemeteries are exempt from this provision.

(b) Size. The maximum distance from top to bottom of any flag shall be 20 percent of the total height of the flag pole, or in the absence of a flag pole, 20 percent of the distance from the top of the flag or insignia to the ground.

(7) Utility signs. Public utility signs that provide information or identify the location of underground utility lines and facilities, high voltage lines and facilities, and other utility facilities and appurtenances are permitted along utility easements and rights-of-way so long as they do not exceed three square feet in size.

(8) Blocking exits, fire escapes, etc. No sign or sign structure shall be erected that impedes use of any fire escape, emergency exit, or standpipe.

(9) Clearance standards. All signs over pedestrian ways shall provide a minimum of 7 feet 6 inches of clearance. All signs over vehicular ways shall provide a minimum of 13 feet 6 inches of clearance.

(10) Relationship to building features. A building sign shall not extend beyond any edge of the

building or the building surface to which it is attached, nor disrupt a major architectural feature of the building such as windows or doors.

(11) Signs painted on building walls or innovative signs which meet the requirements of this Article may be issued a permit in accordance with Section 7.1.4. Applications for these type signs shall include information on layout, graphics, color and any additional information requested by the Planning/Zoning Manager or provided by the applicant to support his application for the construction permit.

(a) Signs painted on building walls shall be located in B-4, IC, M-1 and M-2 zoning classifications. The size of the sign face shall not exceed 675 square feet.

(12) Maximum projection. A building sign shall project no more than four feet perpendicularly from the surface to which it is attached.

(13) Maximum window coverage. The combined area of permanent and temporary signs placed on the exterior of or attached to windows of retail stores shall not exceed 50 percent of the total window area at the same floor level on the side of the building or unit upon which the signs are displayed. Window signage on convenience store windows shall be installed and maintained so that there is a clear and unobstructed view of the cash register and transaction area from the exterior of the store.

(14) Multiple occupancy complexes. Signage for multiple occupancy complexes such as an office building, shopping plaza, shopping center or any commercial or industrial building having more than one tenant, constructed or remodeled after the effective date of this Code shall conform to an approved sign format. The sign format shall be included as a submittal for authorization to erect such a sign and shall be maintained on file in the Growth Services Department. The format shall be presented as a master signage plan or sketch, together with written specifications in sufficient detail to enable the Planning/Zoning Manager to authorize signs based on the specifications. As a minimum, the sign format shall specify the types of signs and dimensions (not to exceed the size limits contained in this Article) which will be permitted each occupant within the complex. The sign format shall also contain common design elements, such as placement, color, shape, or style of lettering, which lend a unified appearance to the signs of the occupants within the complex. The sign format may only be modified with the approval of the Planning/Zoning Manager upon submission of a revised master signage plan and specifications detailing the revised format.

D. Location and design criteria.

(1) General Requirements.

(a) Where a sign is composed of letters or pictures attached directly to a wall or facade, window, door, or marquee, and the letters or pictures are not enclosed by a border or trimming, the sign area shall be the area within the smallest rectangle, parallelogram, triangle, circle or semicircle, the sides of which touch the extreme points of the letters or pictures.

(b) The signable wall or facade area is a continuous portion of a building unbroken by doors or windows and shall be measured by determining the area within an imaginary rectangle drawn around the area. The area shall include roof slopes of less than 45 degrees as measured from the vertical plane, that form a side of a building or unit.

(c) Where four sign faces are arranged in a square, rectangle, or diamond, the area of the sign shall be the area of the two largest faces.

(d) Where a sign is in the form of a three-dimensional object, the area shall be determined by drawing a square, rectangle, parallelogram, triangle, circle or semicircle, the sides of which touch the extreme points or edges of the projected image of the sign and multiplying that area by two. The "projected image" is that image created by tracing the largest possible two

dimensional outline of the sign.

(2) Temporary Signs

(a) Real Estate Signs – Residential shall comply with the following table:

TABLE 4.4.4-1 Real Estate Signs – Residential Standards

Dwelling Type	Maximum Number	Maximum Size Each (square feet)	Maximum Height (feet)
Single Family	1 sign	6	3
Two Family	For 2 signs For 1 sign	6 10	3 8
Three Family	For 2 signs For 1 sign	6 15	3 8
Four Family	For 4 signs For 1 sign	6 20	3 8
Over Four Family	1 sign	32	8

(b) Real Estate Signs - Commercial or Industrial and Construction Signs shall comply with the following:

1. Number - maximum of two signs per parcel. (See Section 4.4.4.H(2)(a), (b) for large parcels and corner parcels.)
2. Size - one square foot of signage per ten feet of frontage up to a maximum of 96 square feet. An individual sign shall not exceed 64 square feet.
3. Height - maximum of 16 feet.
4. Spacing - minimum of 100 feet apart.

(c) All other temporary signs:

Number, size, height and spacing to be specified in special permit to be issued by the Planning/Zoning Manager.

E. Signs permitted in residential zoning classifications:

(1) Signs allowed in residential zoning classifications are as follows:

(a) Two subdivision identification signs per neighborhood, subdivision, or development, not to exceed 64 square feet in sign area per sign

(b) Two identification signs per apartment or condominium complex, not to exceed 64 square feet in sign area per sign.

(c) For permitted non-residential uses, including places of worship, one freestanding sign, not to exceed one square foot in sign area for every two lineal feet of street frontage and one wall sign not to exceed 24 square feet in sign area. Total aggregate sign area shall not exceed 200 square feet.

(2) Special sign regulations for residential zoning classifications are as follows:

(a) All allowed freestanding signs shall have a maximum height limit of ten feet and shall have a setback of five feet from the front and side property line.

F. Signs permitted in commercial and office zoning classifications:

(1) Signs allowed in commercial and office zoning classifications and in the R-O, P-MH and P-RV zoning classifications are as follows:

(a) Single Occupancy Uses, P-MH and P-RV Zoning Classifications: One freestanding on site sign per premises, not to exceed two square feet in sign area for each linear foot of main street frontage up to a maximum of 130 square feet per sign face.

(b) Multiple Occupancy Usages - one freestanding, on-site directory sign, not to exceed the maximums in the following table:

TABLE 4.4.4-2 Multiple Occupancy Usage Sign Standards

ZONING CLASSIFICATION	MAXIMUM SIZE
B-1, Neighborhood Business	200 square feet per sign face
B-2, Community Business	300 square feet per sign face
B-4, Regional Business	350 square feet per sign face
RAC, Rural Activity Center	200 square feet per sign face

(c) Wall Signage:

1. Single occupancy. Three wall signs, not to exceed two square feet in sign area for each linear foot of that occupancy's building frontage up to a maximum of 96 square feet in aggregate sign area. One of the allowed wall signs above may be placed on the side of the occupancy.
2. Shopping centers. Wall signage shall not exceed one and three-quarters square feet in sign area for each linear foot of each occupancy's building frontage.

(d) Surface area of the on-site sign structure supporting the sign face may not exceed the allowable sign area.

(e) One under-canopy sign per occupancy, not to exceed four square feet in sign area.

(f) Incidental signs, not to exceed six square feet in aggregate sign area per occupancy.

(g) On-site identification signs located within 2,000 feet of all intersections located on I-75, shall not exceed 55 feet in overall height.

(h) Outdoor Menu Boards for fast food or drive-thru restaurants shall not exceed 60 square feet in aggregate sign face area.

(2) Location, Setbacks and Height:

(a) The onsite identification or directory sign shall be located in the area between the structure and the access street and shall be set back a minimum of five feet from the front property line.

(b) On-site signs shall not exceed a height of 30 feet.

(3) Special regulations and allowances for commercial and office zoning classifications are as follows:

(a) Where occupancy is on a corner or through lot, or has more than one main street frontage, two wall signs and one additional freestanding sign will be allowed on the additional frontage, not to exceed the size of other allowed wall and freestanding signs.

(b) Freestanding and under-canopy signs shall have a setback of five feet from any public vehicular right-of-way and a minimum clearance of 12 feet over any vehicular use area and seven feet over any pedestrian use area.

(c) Auto dealerships, furniture stores, boat sales and similar retail sales facilities are allowed to combine the freestanding on-site signage and the building signage, not to exceed two square

feet in sign area for each linear foot of main street frontage. The freestanding signage shall not exceed 130 square feet per sign face. Multiple freestanding signs are allowed and shall be spaced a minimum of 150 feet apart.

G. Signs permitted in agricultural zoning classifications:

(1) Signs allowed in agricultural zoning classifications are as follows:

(a) Farm Entrance Signs. One double faced sign or two single faced signs not exceeding a total of 128 square feet of sign area. The allowed sign area per sign face is 64 square feet.

(b) Signs for Home Occupations. One sign, either single or double faced, non-illuminated, not exceeding six square feet in size and not higher than four feet, may be located no closer than five feet to the front property line.

(c) For permitted and SUP authorized agriculturally related non-residential uses or community facilities uses, including places of worship, one freestanding sign, not to exceed one square foot in sign area for every two lineal feet of street frontage and one wall sign not to exceed 24 square feet in sign area. Total aggregate sign area shall not exceed 200 square feet.

H. Signs permitted in heavy commercial and industrial zoning classifications:

(1) Signs allowed in heavy commercial and industrial zoning classifications: B-3, B-5, IC, M-1, M-2 are as follows:

(a) One freestanding on site sign per premises, not to exceed two square feet in sign area for each linear foot of main street frontage up to a maximum of 400 square feet per sign face.

(b) One wall sign per occupancy, not to exceed one and three-quarters square feet in sign area for each linear foot of that occupancy's building frontage up to a maximum of 200 square feet; or

Two roof signs per premises, not to exceed two square feet in sign area for each linear foot of that occupant's building frontage up to a maximum of 200 square feet; or

Three awning signs per occupancy not to exceed 30 percent of the surface area of an awning, or three marquee signs, not to exceed 50 square feet in sign area for each marquee.

(c) Two under-canopy signs per occupancy, not to exceed eight square feet in aggregate sign area

(d) Incidental signs not to exceed six square feet in aggregate sign area per occupancy.

(e) On-site identification signs located within 2,000 feet of all intersections located on I-75, shall not exceed 55 feet in overall height.

(f) The freestanding on-site signage or directory signage shall be located in the area between the structure and the local commercial access street and shall be set back a minimum of five feet from the front property line.

(g) On-site signs shall not exceed a height of 30 feet.

(2) Truck stop signage:

(a) One free standing on-site identification sign per lot or parcel, not to exceed two square feet in sign area for each lineal foot of main street frontage up to a maximum of 600 square feet per sign face: Such signs shall not exceed a height of 55 feet.

(b) Wall signage or roof signage or combination thereof per occupancy, not to exceed two and three-quarters square feet in sign area for each linear foot of that occupancy's building frontage up to a maximum of 520 square feet: Signage may be placed on the front or side of the building.

(c) Direction signs not to exceed 16 square feet of sign area per face: Such signs shall not exceed a height of ten feet.

(d) Menu boards, either single faced or double faced, for drive-thru restaurants shall not exceed 60 square feet in sign face area, measured on one face of the sign.

(e) Truck scale signs shall not exceed 80 square feet per sign face and shall not exceed 20 feet in height.

(f) On-site identification signs located within 2,000 feet of all intersections located on I-75, shall not exceed 55 feet in overall height.

(g) The on-site identification sign(s) shall be set back a minimum of five feet from the front property line.

(h) All signage shall conform to the requirements of Subsection 5.5.16., Sight triangle (corner vision clearance) requirement at all access and egress points.

(3) Special Regulations and Allowances for Heavy Commercial and Industrial Zoning Classifications are as follows:

(a) Where a lot has in excess of 300 feet of main street frontage, one additional freestanding sign will be allowed for each additional 150 feet of main street frontage. Such signs shall be subject to the size and height limitations of the first allowed freestanding sign and may be placed no closer than 150 feet to any other freestanding sign on the same premises.

(b) A projecting sign may be used instead of any allowed wall or freestanding sign, not to exceed a sign area of two square feet for each linear foot of occupancy's building frontage up to a maximum of 64 square feet.

(c) All freestanding, projecting, awning, marquee, and under-canopy signs shall have a minimum setback of five feet from any vehicular public right-of-way, and a minimum clearance of 13 feet, six inches over any vehicular use area and seven feet over any pedestrian use area.

Sec. 4.4.5 Off-site signs

A. Permitted Signs. Off-site advertising signs are allowed in the B-2, B-3, B-4, B-5, IC, M-1, M-2, RC-1, RAC, RI, A-1 and PUD zoning classifications.

B. Double and triple decker signs are prohibited.

C. Location and Design Criteria:

(1) Maximum Size. No off-site advertising sign face shall exceed 675 square feet in size of message area except for temporary (not to exceed 12 months) additions which shall not exceed ten percent of the base size.

(2) Number of Signs. For permitting purposes only, the number of signs will be based upon the number of supporting structures. For example, two sign faces placed back to back mounted on a single supporting structure will be considered as a single, double faced sign. The supporting structure may consist of a single metal post structure or a set of wooden poles placed together which constitute a single supporting structure. Where two sign faces are placed back to back on two separate supporting structures to form a V, and which are at the point no more than five feet apart and at the apex less than 20 feet apart shall be counted as a single sign.

(3) Sign Area. The area of a sign shall be the area within the smallest square, rectangle, parallelogram, triangle, circle or semicircle, the sides of which touch the extreme points or edges of the sign face excluding temporary additions or extensions. Where two sign faces are placed back to back on a single sign structure and the faces are no more than five feet apart at any point, the allowable area of the sign shall be counted as the area of both faces. The exception for V-structures as defined in Section 4.4.5.C(1) shall also apply.

(4) Spacing and Location:

(a) Locations for off-site advertising signs shall be spaced at 1,000 foot intervals measured from center to center along the same side of a common right-of-way. No other off-site sign shall be

located within the 1,000 foot interval and to a property depth of 600 feet along the side of the thoroughfare to which the sign is directed. Spacing shall be determined based on signs that have received the necessary county permit pursuant to this Code as well as those signs existing prior to the adoption of this Code. Signs having received prior authorization shall have priority over a later applicant in determining compliance with the spacing restrictions.

(b) Permitting:

1. County Roadways. Where two or more applications from different persons or companies conflict with each other, only one of the applications may be approved. The first application received by the Growth Service Department will be the first considered for approval. The second application shall remain pending until resolution of the first application. The second applicant shall be advised in writing of the first application and that the first application is being acted upon. If the first application considered is granted, the second application shall be denied. If the first application is denied, the second application shall be considered for approval.
2. State Highways. Replacement signs are signs which do not meet the required spacing without the removal of an existing sign. Applicants submitting an application for a sign replacement may be issued Letters of Intent in the order they are received by the Growth Services Department. The first applicant to present the required State Permit and a copy of the state tags will receive the permit for the sign construction.

(c) Placement Standards:

1. Signs shall not be located within a clear visibility triangle, at intersections of driveway and street or street and street, as said triangle is defined in DIvision 6.11 Traffic Management.
2. Supports for signs or sign structures shall not be placed in or upon a private right-of-way or private easement without demonstrating permission from the private land owner.
3. No sign shall project over or be placed in or upon a public right-of-way.

(5) Maximum Height. No off-site advertising sign, or combination of signs, shall exceed the height of 50 feet.

(6) Maximum Width. No off-site advertising sign, or combination of signs, shall exceed 50 feet in width.

(7) Minimum Setbacks are as follows:

(a) Fifteen feet from street right-of-way or property line

(b) No sign shall be erected within 300 feet of a residential zoning classification, or within 150 feet of a church, public or private school, Public Park or playground, civic, historical or designated scenic area or a cemetery located along a common right-of-way.

(c) No advertising sign shall be located nearer than the height of the sign plus ten feet to any existing residence.

(8) Illumination Standards are as follows:

(a) Sign lighting shall not be designed or located to cause confusion with traffic lights.

(b) Illumination by floodlights or spotlights is permissible and shall be directed so that the light shall not shine directly onto an adjoining property or into the eyes of motorists or pedestrians using or entering public thoroughfares.

(c) Illuminated signs shall not have lighting mechanisms that project more than three feet perpendicularly from any surface of the sign over public right-of-way.

D. General Requirements. All permanent signs, and the illumination thereof, shall be designed, constructed and maintained in conformity with applicable provisions of the building and electrical

codes adopted by Marion County.

Sec. 4.4.6 Non-conforming advertising signs

A. Continuation of Existence. Non-conforming permanent signs, both on-site and off-site may continue until they are removed or relocated. Non-conforming signs are declared by this Code to be incompatible with permitted uses in the zoning classification where located. Non-conforming signs shall not be enlarged or reconstructed to continue their nonconformity after relocation or major damage. Major damage is defined to have occurred when the cost of repair exceeds 90 percent of the tangible tax value of the sign for the latest tax year.

B. Repair, Alteration, Enlargement. A non-conforming sign may be repaired in any one year in an amount not exceeding 25 percent of the tangible tax value of the sign for that year. Any repair or refurbishing of the sign that enlarges the dimensions of the sign face, or that raises the height above ground level of the sign so as to enhance the signs visibility or the period of time that the sign is visible shall be considered erection of a new sign and not reasonable repair or maintenance and shall be prohibited. Nothing in this section shall be deemed to prevent compliance with applicable laws relative to the safety of a non-conforming sign.

C. Reconstruction. After a Catastrophe. A sign which is destroyed by an Act of God or by fire, explosion, war or other catastrophe shall not be reconstructed. Destroyed is defined as the cost to reconstruct the sign when that cost exceeds 90 percent of the tangible tax value of the sign immediately prior to destruction.

Article 5 Overlay Zones and Special Areas

Overlay zones and special areas identify unique spaces which require special development regulations to maintain and protect their unique characteristics or purposes. Each zone or area is described with its respective regulations, and sites may be subject to multiple zones and/or areas. The land use designation and/or zoning classification for any site remains undisturbed by the creation of a zone or area, except as specifically noted herein, when the zone or area imposes additional or different development standards than those that would otherwise apply. In the event of conflict, the more stringent regulation applies and supplements and/or supersedes other regulations provided in this Code, where applicable.

Division 1 Airport Overlay Zone (AOZ)

Sec. 5.1.1 Purpose and intent.

A. The Airport Overlay Zone is designed to provide for safe airport operations and development of uses in locations near airports which are compatible with the airport use.

B. The purpose of this overlay zone is to regulate heights of structures and vegetation and to regulate the uses of land within the vicinity of general aviation public use airports, in accordance with FS 333, to avoid the creation of airport hazards and inhibit the development of uses which may be adversely affected by airport operations.

Sec. 5.1.2 Land use restrictions.

A. Dunnellon Airport. Within the boundary of the Dunnellon Airport Overlay Zone as described below, the land uses following shall not be permitted.

(1) Description of Area: All lands lying within the transitional, approach, conical, horizontal and primary zones as defined and shown on Map 2.9, “Marion County Airport Layout Plan,” of the Marion County Comprehensive Plan.

(2) Residential developments having a gross density greater than one dwelling unit per acre.

(3) The storage of explosive materials above the ground.

(4) Any use which interferes with the lawful operation of an airborne aircraft.

(5) Any permanent use of any type which produces electronic interference with navigation signals or with radio communication between aircraft and the airport.

(6) Any airport obstruction, as prohibited by the Federal Aviation Administration.

B. Ocala Airport

Description of Area. All lands lying outside the corporate limits of the City of Ocala and within the transitional, approach, conical, horizontal and primary areas as defined and shown on Figure 3-7, "Airport Layout Plan, Ocala Municipal Airport" of the Marion County Comprehensive Plan; Port, Aviation and Related Facilities Sub-Element.

Sec. 5.1.3 Lot and building standards.

A. Height Limitations, Dunnellon Airport.

(1) No structure shall be erected, and no vegetation shall be permitted to grow, that exceeds any of the following height limitations:

(a) Primary Zone. The elevation of the nearest runway centerline excluding those structures which are part of the landing and take-off area.

(b) Horizontal Zone. 150 feet above airport elevation.

(c) Conical Zone. 150 feet above airport elevation at the inner boundary, with permitted height

increasing one foot vertically for every 20 feet of horizontal distance measured outward from the inner boundary to a height of 350 feet above airport elevation at the outer boundary.

(d) Approach Zone. The runway centerline end height at the inner edge, with permitted height increasing with horizontal distance outward from the inner edge as follows:

1. Runways 14/32 and 9/27: one foot vertically for every 20 feet of horizontal distance.
2. Runway 5: one foot vertically for every 34 feet of horizontal distance.
3. Runway 23: one foot vertically for every 50 feet of horizontal distance for the first 10,000 feet, then one foot vertically for every 40 feet of horizontal distance thereafter.

(e) Transitional Zone. The same as for the primary zone or the approach zone where it adjoins, with permitted height increasing one foot vertically for every seven feet horizontally, measured at right angles to the runway centerline or extended centerline.

B. Height Limitations, Ocala Airport.

(1) No structure shall be erected, and no vegetation shall be permitted to grow, that exceeds any of the following height limitations:

(a) Primary Zone. The elevation of the nearest runway centerline excluding those structures which are part of the landing and take-off area.

(b) Horizontal Zone. 150 feet above airport elevation.

(c) Conical Zone. 150 feet above airport elevation at the inner boundary, with permitted height increasing one foot vertically for every 20 feet of horizontal distance measured outward from the inner boundary to a height of 350 feet above airport elevation at the outer boundary.

(d) Approach Zone. The runway centerline end height at the inner edge, with permitted height increasing with horizontal distance outward from the inner edge as follows:

1. Runway 08/26: One foot vertically for every 20 feet of horizontal distance.
2. Runway 36: One foot vertically for every 50 feet of horizontal distance for the first 10,000 feet, then one foot vertically for every 40 feet of horizontal distance.
3. Runway 18: One foot vertically for every 34 feet of horizontal distance.

(e) Transitional Zone. The same as for the primary zone or the approach zone where it adjoins, with permitted height increasing one foot vertically for every seven feet horizontally, measured at right angles to the runway centerline or extended centerline.

Division 2 Environmentally Sensitive Overlay Zone (ESOZ)

Sec. 5.2.1 Purpose and intent. This overlay zone is intended to protect the Environmentally Sensitive Lands depicted in the Comprehensive Plan and to provide criteria for the conservation and protection of certain lakes, rivers, shorelands, wetlands, natural habitats, native vegetation and associated uplands, and other environmentally sensitive areas from the adverse effects of development while protecting the rights of property owners.

A. Projects within this overlay zone must protect the surface water and ground water quality by providing stormwater management systems, buffers and enhanced setback for structures and septic systems.

B. When regulations of this overlay zone conflict with any other provisions of the Code, the most restrictive regulation shall apply.

Sec. 5.2.2 Applicability. Activities, structures, or uses within the ESOZ as shown on the duly adopted Future Land Use Map, as prepared by the Growth Services Department and adopted by the Board determined as follows:

A. Waterbodies subject to this overlay zone.

Table 5.2.2-1

Rivers, Spring Runs, and Streams:	
Ocklawaha River	Orange Creek
St. Johns River	Withlacoochee River
Rainbow River*	Silver River
Salt Springs Run	Silver Glen Springs Run
Juniper Run	Silver Creek
Dead River Tributary to the Ocklawaha River	
Springs:	
Rainbow Springs	Silver Springs
Salt Springs	Silver Glen Springs
Juniper Springs	
Lakes:	
Bonable Lake	Bryant
Chain O Lakes	Charles
Delancy	Doe
Eaton	Ella/Juanita
Farles	Halfmoon
Jumper	Kerr
Little Kerr/Warner	Little Weir
Mary	Mill Dam
Mud	Nicotoon
Pecan	Smith
Weir	Lake George (Shoreline Only)
Orange Lake (Shoreline Only)	

*From its source, Rainbow Springs, to the south line of the northwest 1/4 of Section 30, Township 16 South, Range 19 East.

B. ESOZ Boundaries

(1) The ESOZ boundaries shall be as depicted on the Marion County Comprehensive Plan Future Land Use Map 11, as amended.

(2) ESOZ boundaries shall be clarified by the Planning/Zoning Manager, if necessary, or by the applicant's engineer or surveyor if approved by the Planning/Zoning Manager. If an applicant provides data from sources acceptable to the Planning/Zoning Manager to prove they are not within an ESOZ, then the Planning/Zoning Manager may exempt the applicant from the requirements of this section after review and comment on the acceptability and reliability of the data by the appropriate water management district.

Sec. 5.2.3 Permitted uses and activities.

A. All uses permitted in the underlying land use category and zoning classification which are consistent with the requirements of this overlay zone provided it is shown by the applicant that the natural function of the protected natural feature will not be materially impaired, diminished, or harmed by the proposed development and that surface water or ground-water quality will not be degraded. Uses that have local or state adopted best management practices (BMPs) and/or guidelines shall be managed and conform to such.

B. Buildings and structures permitted in the underlying zoning classification unless specifically prohibited herein.

C. Repairs to existing structures, care of existing lawns and yards, or limited removal of vegetation to support surveying activities.

D. Agricultural uses. Additionally, when such agricultural uses have adopted best management practices and guidelines (BMPs) as outlined in the Florida Department of Agriculture and Consumer Services they shall be managed and conform to such BMPs.

Sec. 5.2.4 ESOZ development standards.

A. Waterfront Setback. Setbacks on lots, parcels or tracts which have water frontage shall be 75 feet from the wetlands line or from the water boundary setback line, whichever is greater. The Board of Adjustment may grant a variance from this setback provision where the required setback renders an existing lot of record unbuildable for a single family residence or addition to a nonconforming single family residence.

B. Tract Width. New waterfront lots shall have a minimum tract width of 125 feet and shall meet the buffer zone requirements.

C. Sewage Disposal Systems. Septic tanks and leachfields shall not be allowed in the area between the structure and the water boundary setback line or the wetlands line, whichever is greater. All new septic tanks and drainfields shall be located in the side yard or the street side (rear or back yard) of all structures. In the event there is a conflict between the location of existing wells on adjacent properties and the proposed septic tank and leachfield location, the septic tank and leachfield shall be located in accordance with the requirements of the State of Florida Department of Health. In this case the burden of proof is on the applicant to prove that the water front area is the only location or that the property may otherwise be an unbuildable lot.

D. Front Yard Buffer Zone.

(1) A vegetative buffer area shall extend 50 feet landward from wetlands line or 50 feet from the water boundary setback line, whichever provides the greater buffer. Existing vegetation within this buffer area shall be preserved or mitigated as approved by DRC.

(2) Those parcels within the ESOZ that are governed by an Aquatic Preserve Management Plan must obtain all required permits prior to any littoral zone vegetation removal.

E. Protection of littoral zone vegetation.

Required aquatic vegetation removal permits must be obtained from the appropriate state jurisdictional agency prior to any vegetation removal or if non-mechanical/chemical removal methods are to be utilized within the littoral zone.

F. One percent (100-year) flood plain requirements.

(1) This section provides requirements for all land use activities, including single family residences, which materially change the location, elevation, size, capacity, or hydraulic characteristics of the existing one percent (100-year) flood plain as identified by FEMA. The intent is to ensure that equivalent flood plain volume and conveyance is maintained. This section also supplements Article 5, Flood Plain Overlay Zone.

(2) Land use activities which materially change the flood plain may be permitted when calculations performed by a licensed professional are provided demonstrating that compensating storage or other hydraulic features or improvements are provided on the owner's property or within an easement. The calculations shall be reviewed and approved by the County Engineer or designee.

(3) Land use activities that do not meet the thresholds for a stormwater analysis shall minimally be required to demonstrate one-for-one compensating storage, to be reviewed and approved by the County Engineer or designee.

(4) When proposed improvements encroach into a flood hazard zone, additional design storm criteria may be required based on the parameters utilized in the adopted FEMA FIRM. In some cases it may be necessary for the applicant to obtain a map amendment from FEMA.

(5) No sewage effluent disposal shall be permitted within the one percent (100-year) flood plain.

(6) Densities within the one percent (100-year) flood plain shall not exceed one dwelling unit per acre.

(7) Clearing of vegetation shall be limited to those areas which maintain a 50 foot setback from all wetlands line, does not contain listed wildlife or plant species or important habitat for listed species, and provides a stormwater management system which mimics and uses the features and functions of natural drainage systems.

G. Accessory Uses and Structures.

(1) No accessory use or structure may be located in the minimum required front yard setback except for such as but not limited to boat docks, boat houses, boat davits and lifts, and bulkheads and other erosion control devices, or any uses or structures allowed by FDEP.

(2) In residential classifications, no other accessory uses or structures shall be located in a front yard setback except for wells, landscaping or architectural features such as gazebos (of no more than 400 SF), planters, flagpoles and statuary, provided all side setbacks are observed.

(3) Pools and screen pool enclosures may be located in the front yard provided all setbacks are observed.

(4) Accessory uses and structures shall be located within rear and side yards provided all setbacks are observed.

(5) Accessory structures may not exceed two stories or 24 feet in height.

Sec. 5.2.5 Development density standards.

A. Urban Areas within the ESOZ, New Projects

(1) Within 1,000 feet of a waterbody and when an OSTDS or PBTS is used:

(a) Lot size - minimum of one acre; and

(b) Density - maximum of one dwelling unit per gross acre.

(2) Over 1,000 feet from a waterbody when an OSTDS or PBTS is used:

(a) Lot size - minimum of one-half acre; and

(b) Density - a maximum of two dwelling units per gross acre.

(3) When central sewer systems are available and utilized, density may be that of the underlying land use category.

(4) No accessory use guest cottage or apartments are permitted unless central sewer systems are utilized.

B. In Urban Areas within the Lake Weir ESOZ the following densities shall apply:

(1) Within the area circumscribed as follows: County Road 25, Sunset Harbor Road, Southeast 105th Avenue, Southeast 100th Avenue, Luffman Road and Southeast 115th Avenue, or 1,000 feet from the water boundary setback line of Lake Weir, whichever is farther from Lake Weir; the allowable density shall be one dwelling unit per two gross acres.

(a) When centralized sewer is available and utilized, the allowable density shall be three units per gross acre.

(b) No accessory use guest cottage or apartment are permitted unless central sewer systems are utilized.

(2) For all areas within the Urban Area within the ESOZ which are beyond the above circumscribed

area, or exceed 1,000 feet from the water boundary setback line of Lake Weir, the allowable density shall be one dwelling unit per gross acre.

(a) When central sewer is available and utilized, the maximum allowable density for this area shall be four dwelling units per gross acre.

(b) When central sewer is not available a family guest cottage/apartment is considered a residential unit for density purposes. A family guest cottage/apartment may be permitted where the resulting residential density will remain in compliance with the permitted ESOZ density. The areas of surface waters, wetlands, and flood plains will not be used in density calculations.

C. Densities of Rural Areas within the ESOZ shall conform to the densities specified in the underlying land use category and underlying zoning classification. When central sewer is not available a family guest cottage/apartment is considered a residential unit for density purposes. One family guest cottage/apartment may be permitted where the resulting residential density will not exceed one unit per two acres. The areas of surface waters, wetlands, and flood plains will not be used in density calculations.

D. Reduction of Densities. All allowed densities, or intensities of use, or rate of development may be reduced by the Board on properties where adjoining bodies of water have been determined impaired and listed by FDEP.

E. Non-contiguous parcels of record created on or before January 1, 1992, and under one ownership as of August 11, 1993, that cannot meet the density requirements set forth in this section, will be allowed to construct one dwelling unit per parcel of record if the lot is of buildable size as set forth in this Code. When central sewer is not available a family guest cottage/apartment is considered a residential unit for density purposes. One family guest cottage/apartment may be permitted where the resulting residential density will not exceed one unit per two acres. The areas of surface waters, wetlands, and flood plains will not be used in density calculations.

Sec. 5.2.6 Submittal requirements.

A. All applications for development on lands within the ESOZ boundary which are not contiguous uplands of ESOZ surface waters, wetlands and flood plain shall submit an applicable major, minor or building permit site plan which includes protection of those areas from degradation. Site analysis which includes soils and geologic characteristics, topographic data, and other pertinent data as listed in Section 5.2.6.B are examples of information that shall be prepared to demonstrate compliance with the requirements of this section.

B. All applications for development on lands within the ESOZ, including individual single family residences and duplexes which are contiguous uplands of ESOZ surface waters, wetlands and flood plain, shall submit an ESOZ plan which includes the following information as a minimum:

(1) Submittal letter executed and signed by record owner of subject property or an agent authorized in writing by the record owner to act in his behalf. Submittals will be processed by the Growth Services Department.

(2) Required drawings for ESOZ Plan.

(a) Four plans shall be submitted and include a standard trim line size which clearly depicts the information below. Multiple plans may be used to provide necessary information below.

(b) The plan shall be clearly labeled “ESOZ Plan.”

(c) Contain a location map drawn to scale showing the relation of the subject property to Section, Township and Range lines; principle roads; the entire length of any water body as it pertains to the property; boundary information or survey when requested by County staff; zoning; north arrow.

(d) Show in plan view with dimension and distances to property lines all proposed development, building, existing or proposed well, existing or proposed septic tanks, pavement and other features based on boundary information or survey.

(e) The development or redevelopment of a commercial or residential project within the ESOZ shall provide for a stormwater management plan which provides water quality retention volume of one-half inch of runoff from that portion of the project parcel draining toward the ESOZ water body, excluding any area left in a natural condition, or 2.50 inches over the impervious surfaces, whichever is greater. Water quality retention areas shall be located waterward of the improvements to the maximum extent practical.

1. The design of the stormwater management system shall imitate and use the features and functions of natural drainage ways, depressions, wetlands, one percent (100-year) flood plains, and highly permeable soils when possible. The use of swales, berms, or detention/retention areas shall be used when necessary to prevent direct flow of stormwater runoff to a receiving water body.
2. A berm constructed with clean, Type A soils is recommended so as to encourage full volume recovery within 72 hours. Minimum berm width shall be three feet and side slopes shall be three to one or flatter. Should the applicant choose this method to provide for stormwater management and the County approves this type of system for the proposed project the applicant can use ESOZ berm construction standard lengths and heights developed by the County.
3. Indicate areas in which grading or other earth work is to take place with percentage of slope given.
4. Show the bottom of the floor joists for a raised floor structure or the finished floor elevation for a concrete slab structure shall be one foot above the established high water elevation for the one percent (100-year) flood plain. The elevation of all proposed habitable structures shall be called out. New construction, renovation or remodeling shall be constructed with materials and utility equipment resistant to flood damage.
5. Location of temporary silt fencing shall be shown. Silt fencing shall be installed prior to any clearing or excavation and shall be maintained during construction.
6. Show the limits of all proposed clearing.
7. A boundary and topographic survey if required, signed and sealed by a Surveyor and Mapper licensed to practice in the State of Florida, shall be provided and shall clearly present a minimum:
    a. Contours at no greater than two feet intervals.
    b. Water boundary setback line and water's edge elevation and limits shown and staked on site.
    c. The 25-year flood plain elevation (Rainbow River only) and the one percent (100-year) flood plain with elevation and limits. Show and stake two Bench Marks based on approved datum and their elevation that has been established relative to the proposed buildings and septic tank systems, for all lands located within the one percent (100-year) flood plain.
    d. All wetlands lines shall be delineated as staked by a qualified professional.

(f) Should the applicant choose not to use ESOZ berm construction standard lengths and heights developed by the County, then the applicant shall provide signed and sealed plans and calculations prepared by a professional authorized by the State of Florida to prepare such plans. These calculations shall be to the same design criteria and methodology as identified in for stormwater drainage design in Article 6.

(3) Projects exceeding the impervious area threshold or area of disturbance threshold as described for a Major Site Plan in Article 2 shall follow the criteria established for a Major Site Plan.

(4) If a site analysis is performed in connection with subdivision platting, then subsequent individual lot owners do not need to perform an individual site analysis, but must adhere to the stormwater design in the original plat approval or development order.

Sec. 5.2.7 Review and approval.

A. All ESOZ plans are reviewed by the Zoning Division for compliance with this section.

B. Projects on land which is not contiguous upland of ESOZ surface waters, wetlands and flood plain, shall be evaluated to determine the extent of protection to be provided on a case by case basis as provided in Section 5.2.6.B. Determination will be based on application information submitted and a site visit by the Zoning Division or Office of the County Engineer. If site analysis indicates more information is required the applicant will be responsible for providing applicable information in Section 5.2.6.B.

C. Projects on land which is contiguous upland of ESOZ surface waters, wetlands and flood plain shall be reviewed for compliance with the Section 5.2.6.B including staking of applicable delineation lines before the site visit. The site visit is conducted to determine compliance with this section including setback, buffering, flood plain and stormwater management plan.

D. All projects which require submittal of a Major Site Plan shall be reviewed and approved under the provisions of Article 2 and Article 6, Major Site Plan.

Sec. 5.2.8 Completion and close out.

A. Building permit issuance, subsequent final inspection and certificate of occupancy shall constitute the completion of the ESOZ Plan process.

B. Expiration. The approval of the ESOZ Plan shall expire in two years or at expiration of the building permit .

Division 3 Flood Plain Overlay Zone (FOZ)

Sec. 5.3.1 Purpose and intent.

A. It is the intent and purpose of the Flood Plain Overlay Zone to promote the public health, safety and general welfare and to minimize public and private losses due to flood conditions in specific areas by provisions designed to:

(1) Restrict or prohibit uses which are dangerous to health, safety and property due to water or erosion hazards, which result in damaging increases in erosion or in flood heights and velocities;

(2) Require that uses vulnerable to floods including facilities which serve such uses be protected against flood damage throughout their intended life span;

(3) Control the alteration of natural flood plains, stream channels, and natural protective barriers which are involved in the accommodation of flood waters;

(4) Control filling, grading, dredging and other development activities which may increase erosion or flood damage; and

(5) Prevent or regulate the construction or removal of flood barriers which will unnaturally divert floodwaters or which may increase flood hazards to other lands.

B. The Objectives of the Flood Plain Overlay Zone are to:

(1) Protect human life, health, safety and general welfare and to eliminate or minimize property damage;

(2) Minimize expenditure of public money for costly flood control projects;

(3) Minimize the need for rescue and relief efforts associated with flooding and generally

undertaken at the expense of the general public;

(4) Minimize prolonged business interruptions;

(5) Minimize damage to public facilities and utilities such as water and gas mains, electric, telephone and sewer lines, roadways, and bridges and culverts located in flood plains;

(6) Maintain a stable tax base by providing for the sound use and development of flood prone areas in such a manner as to minimize flood blight areas; and

(7) Ensure that potential homebuyers are notified that property is in a flood hazard area.

Sec. 5.3.2 Applicability.

A. The areas of special flood hazard identified by the Federal Emergency Management Agency in the Flood Insurance Study (FIS) for Marion County, dated August 28, 2008, with the accompanying maps and other supporting data, and any subsequent revisions thereto, are adopted by reference and declared to be a part of the Flood Plain Overlay Zone. The Flood Insurance Study and Flood Insurance Rate Map are on file at the Growth Services Department.

B. Designation of Flood Plain Administrator. The Board hereby appoints the Planning/Zoning Manager to administer and implement the provisions of the Flood Plain Overlay Zone and is herein referred to as the Flood Plain Administrator.

C. A development permit shall be required in conformance with the provisions of this flood plain Overlay Zone and all other articles and sections prior to the commencement of any development activities.

D. No structure or land shall hereafter be located, extended, converted or structurally altered without full compliance with the terms of Article 6.3. Flood Plain Overlay Zone and other applicable regulations.

E. Article 6.3. Flood Plain Overlay Zone is not intended to repeal, abrogate, or impair any existing easements, covenants, or deed restrictions. However, where Article 6.3. Flood Plain Overlay Zone and another conflict or overlap, whichever imposes the more stringent restrictions shall prevail.

F. In the interpretation and application of Article 6.3. Flood Plain Overlay Zone all provisions shall be:

(1) Considered as minimum requirements;

(2) Liberally construed in favor of the governing body; and

(3) Deemed neither to limit nor repeal any other powers granted under State of Florida statutes.

G. The degree of flood protection required by Article 6.3. Flood Plain Overlay Zone is considered reasonable for regulatory purposes and is based on scientific and engineering consideration. Larger floods can and will occur on rare occasions. Flood heights may be increased by man-made or natural causes. Article 6.3. Flood Plain Overlay Zone does not imply that land outside the areas of special flood hazard or uses permitted within such areas will be free from flooding or flood damages. Article 6.3. Flood Plain Overlay Zone shall not create liability on the part of Board or by any officer or employee thereof for any flood damages that result from reliance on Article 6.3. Flood Plain Overlay Zone or any administrative decision lawfully made there under.

H. Violation of the provisions of Article 6.3. Flood Plain Overlay Zone or failure to comply with any of its requirements, including violation of conditions and safeguards established in connection with grants of variance or special uses, shall be punishable for a non-criminal violation pursuant to the provisions of Chapter 162 of Florida Statutes. Nothing herein contained shall prevent the Flood Plain Administrator from taking such other lawful actions as is necessary to prevent or remedy any violation.

Sec. 5.3.3 Development standards.

In all areas of special flood hazard, all development sites including new construction and substantial

improvements shall be reasonably safe from flooding, and meet the following provisions:

A. New construction and substantial improvements shall be designed or modified and adequately anchored to prevent flotation, collapse or lateral movement of the structure resulting from hydrodynamic and hydrostatic loads, including the effects of buoyancy;

B. Manufactured homes shall be anchored to prevent flotation, collapse, or lateral movement. Methods of anchoring may include, but are not limited to, use of over-the-top or frame ties to ground anchors. This standard shall be in addition to and consistent with applicable State of Florida requirements for resisting wind forces;

C. New construction and substantial improvements shall be constructed with materials and utility equipment resistant to flood damage. See the applicable Technical Bulletin or Bulletins for guidance, several of which are provided by FEMA;

D. New construction or substantial improvements shall be constructed by methods and practices that minimize flood damage. See the applicable Technical Bulletin or Bulletins for guidance, several of which are provided by FEMA;

E. Electrical, heating, ventilation, plumbing, air conditioning equipment and other service facilities, including duct work, shall be designed and/or located so as to prevent water from entering or accumulating within the components during conditions of flooding. All such equipment must be elevated a minimum of one foot above base flood elevation;

F. New and replacement water supply systems shall be designed to minimize or eliminate infiltration of flood waters into the system;

G. New and replacement sanitary sewage systems shall be designed to minimize or eliminate infiltration of flood waters into the systems and discharges from the systems into flood waters;

H. On-site waste disposal systems shall be located and constructed to avoid impairment to them or contamination from them during flooding;

I. Any alteration, repair, reconstruction or improvements to a building that is in compliance with the provisions of Article 6.3 Flood Plain Overlay Zone shall meet the requirements of "new construction" as contained in Article 6.3. Flood Plain Overlay Zone;

J. Any alteration, repair, reconstruction or improvements to a building that is not in compliance with the provisions of Article 6.3 Flood Plain Overlay Zone, shall be undertaken only if said non-conformity is not furthered, extended, or replaced;

K. All applicable additional Federal, State of Florida, and local permits shall be obtained and submitted to Marion County.

L. Standards for Proposed Subdivisions and other Proposed Development (including manufactured homes):

(1) All proposed subdivisions shall be consistent with the need to minimize flood damage;

(2) All proposed subdivisions shall have utilities and facilities such as sewer, gas, electrical, and water systems located and constructed to minimize or eliminate flood damage;

(3) All proposed subdivisions shall have adequate drainage provided to reduce exposure to flood hazards. Land included in the special flood hazard area shall not be used for residential use within a proposed subdivision unless the FIRM map is amended to remove the structure or land from inclusion in this overlay zone.

M. Specific Standards. In all A-Zones where base flood elevation data have been provided (Zones AE, and AH), as set forth in Article 6.3.5.b, the following provisions shall apply:

(1) Residential Construction. All new construction or substantial improvement of any residential building (including manufactured home) shall have the lowest floor, including basement, elevated to no lower than one foot above the base flood elevation. Should solid foundation

perimeter walls be used to elevate a structure, there must be a minimum of two openings on different sides of each enclosed area sufficient to facilitate automatic equalization of flood hydrostatic forces in accordance with standards of Article 6.3.5.b(3).

(2) Non-Residential Construction. All new construction or substantial improvement of any commercial, industrial, or non-residential building (including manufactured home) shall have the lowest floor, including basement, elevated to no lower than one foot above the base flood elevation. All buildings located in A-Zones may be flood proofed, in lieu of being elevated, provided that all areas of the building components below the base flood elevation plus two foot are water tight with walls substantially impermeable to the passage of water, and use structural components having the capability of resisting hydrostatic and hydrodynamic loads and the effects of buoyancy. A professional engineer, licensed by the State of Florida, shall certify that the standards of this subsection are satisfied using the FEMA Flood Proofing Certificate. Such certification along with the corresponding engineering data, and the operational and maintenance plans shall be provided to the Flood Plain Administrator.

(3) Elevated Buildings. New construction or substantial improvements of elevated buildings that include fully enclosed areas formed by foundation and other exterior walls below the lowest floor elevation shall be designed to preclude finished living space and designed to allow for the entry and exit of floodwaters to automatically equalize hydrostatic flood forces on exterior walls.

(a) Designs for complying with this requirement must either be certified by a professional engineer, licensed by the State of Florida, or meet the following minimum criteria:

1. Provide a minimum of two openings having a total net area of not less than one square inch for every square foot of enclosed area subject to flooding;
2. The bottom of all openings shall be no higher than one foot above foundation adjacent interior grade (which must be equal to or higher in elevation than the adjacent exterior grade); and
3. Openings may be equipped with screens, louvers, valves, or other coverings or devices provided they provide the required net area of the openings and permit the automatic flow of floodwaters in both directions.

(b) Fully enclosed areas below the lowest floor shall solely be used for parking of vehicles, storage, and building access. Access to the enclosed area shall be minimum necessary to allow for parking of vehicles (garage door), limited storage of maintenance equipment used in connection with the premises (standard exterior door), or entry to the living area (stairway or elevator); and

(c) The interior portion of such enclosed area shall not be finished or partitioned into separate rooms.

(4) Standards for Manufactured Homes and Recreational Vehicles

(a) All manufactured homes that are placed, or substantially improved within Zones AH and AE, on sites (i) outside of an existing manufactured home park or subdivision, (ii) in a new manufactured home park or subdivision, (iii) in an expansion to an existing manufactured home park or subdivision, or (iv) in an existing manufactured home park or subdivision on which a manufactured home has incurred "substantial damage" as the result of a flood, the lowest floor be elevated on a permanent foundation to no lower than one foot above the base flood elevation and be securely anchored to an adequately anchored foundation system to resist flotation, collapse, and lateral movement.

(b) All manufactured homes to be placed or substantially improved in an existing manufactured home park or subdivision within Zones AH and AE that are not subject to the provisions of

Article 6.3.5.b. 4(a), must be elevated so that either:

1. The lowest floor of the manufactured home is elevated to no lower than one foot above the base flood elevation, or
2. The manufactured home chassis is supported by reinforced piers or other foundation elements of at least an equivalent strength that are no less than 48 inches in height above the grade and securely anchored to an adequate foundation system to resist flotation, collapse, and lateral movement.

(c) All recreational vehicles placed on sites within Zones AH and AE must either:

1. Be on the site for fewer than 180 consecutive days,
2. Be fully licensed and ready for highway use (a recreational vehicle is ready for highway use if it is on its wheels or jacking system, is attached to the site only by quick disconnect type utilities and security devices and has no permanently attached additions), or
3. Meet all the requirements for new construction, including anchoring and elevation requirements in accordance with Article 6.3., paragraphs 5.b.(4)(a) and (b).

(5) Adequate drainage paths around structures shall be provided on slopes to guide water away from structures.

(6) Standards for Streams with Established Base Flood Elevations, Without Regulatory Floodways:

Located within the areas of special flood hazard established in Article 6.3., paragraph 3.b., where streams exist for which base flood elevation data has been provided by the Federal Emergency Management Agency without the delineation of the regulatory floodway (Zone AE), the following additional provisions shall also apply.

(a) Until a regulatory floodway is designated, no new construction, substantial improvements, or other development including fill shall be permitted within the areas of special flood hazard, unless it is demonstrated that the cumulative effect of the proposed development, when combined with all other existing and anticipated development will not increase the water surface elevation of the base flood more than one foot at any point within the community.

(b) Development activities which increase the water surface elevation of the base flood by more than one foot may be allowed, provided that the developer or applicant first applies - with the community's endorsement - for a conditional FIRM revision, and receives the approval of the FEMA.

(7) Floodways. Located within areas of special flood hazard established in Article 6.3., paragraph 3.b., and are areas designated as floodways. Since the floodway is an extremely hazardous area due to the velocity of flood waters which carry debris, potential projectiles and have significant erosion potential, the following additional provisions shall also apply:

(a) Prohibit encroachments, including fill, new construction, substantial improvements and other developments within the regulatory floodway unless certification (with supporting technical data) by a professional engineer, licensed by the State of Florida, is provided through hydraulic and hydrologic analyses performed in accordance with standard engineering practices demonstrating that encroachments would not result in any increase in flood levels during occurrence of the base flood discharge.

(b) Prohibit the placement of manufactured homes (mobile homes), except in an existing manufactured homes (mobile homes) park or subdivision. A replacement manufactured home may be placed on a lot in an existing manufactured home park or subdivision provided the anchoring standards of Article 6.3, paragraph 5.a.(2) and the elevation standards of Article 6.3, paragraphs 5.b.(1) and (2), and the encroachment standards of Article 6.3, paragraph 5.b.(7)(a), are met.

(c) Development activities including new construction and substantial improvements that

increase the water surface elevation of the base flood by more than one foot may be allowed, provided that the developer or the applicant first applies - with the communities' endorsement - for a conditional FIRM revision, and receives the approval of FEMA.

(d) When fill is proposed, in accordance with the permit issued by the DOH, within the regulatory floodway, the development permit shall be issued only upon demonstration by appropriate engineering analyses that the proposed fill will not increase the water surface elevation of the base flood in accordance with Article 6.3, paragraph 5.b.(7)(a).

(8) Specific standards for A-Zones without base flood elevations and regulatory floodways. Located within the areas of special flood hazard established in, Article 6.3., paragraph 3.b., where there exist A Zones for which no base flood elevation data and regulatory floodway have been provided or designated by the FEMA, the following provisions shall apply:

(a) Require standards of Article 6.3., paragraph 5.a.

(b) The Flood Plain Administrator shall obtain, review, and reasonably utilize any base flood elevation and floodway data available from a Federal, State of Florida, or any other source, in order to administer the provisions of Article 6.3. Flood Plain Overlay Zone. When such data is utilized, provisions of Article 6.3., paragraph 5.b. shall apply. The Flood Plain Administrator shall:

1. Obtain the elevation (in relation to the approved datum) of the lowest floor (including the basement) of all new and substantially improved structures,
2. Obtain, if the structure has been flood proofed in accordance with the requirements of Article 6.3., paragraph 5.b.(2), the elevation in relation to the approved datum to which the structure has been flood proofed, and
3. Maintain a record of all such information.

(c) Notify, in riverine situations, adjacent communities, the State of Florida, NFIP Coordinating Office, and the applicable Water Management District prior to any alteration or relocation of a watercourse, and submit copies of such notifications to FEMA.

(d) Assure that the flood carrying capacity within the altered or relocated portion of any watercourse is maintained.

(e) Manufactured homes shall be installed using methods and practices that minimize flood damage. They must be elevated and anchored to prevent flotation, collapse, or lateral movement. Methods of anchoring may include, but are not limited to, use of over-the-top or frame ties to ground anchors. This requirement is in addition to applicable State of Florida and local anchoring requirements for resisting wind forces.

(f) When the data is not available from any source as in Article 6.3., paragraph 5.c. (2), the lowest floor of the structure shall be elevated to no lower than three feet above the highest adjacent grade.

(g) Require that all new proposed subdivisions and other proposed developments (including proposals for manufactured home parks and subdivisions) greater than 50 lots or five acres, whichever is the lesser, include within such proposals base flood elevation data.

(9) Standards for AO-Zones.

Located within the areas of special flood hazard established in Article 6.3., paragraph 3.b., and are areas designated as shallow flooding areas. These areas have flood hazards associated with base flood depths of one to three feet, where a clearly defined channel does not exist and the path of flooding is unpredictable and indeterminate; therefore, the following provisions apply:

(a) All new construction and substantial improvements of residential structures in all AO Zones shall have the lowest floor, including basement, elevated above the highest adjacent grade at least as high as the depth number specified in feet on the Flood Insurance Rate Map. If no

flood depth number is specified, the lowest floor, including basement, shall be elevated to no less than three feet above the highest adjacent grade.

(b) All new construction and substantial improvements of non-residential structures shall:

1. Have the lowest floor, including basement, elevated above the highest adjacent grade at least as high as the depth number specified in feet on the FIRM. If no flood depth number is specified, the lowest floor, including basement, shall be elevated to at least three feet above the highest adjacent grade, or
2. Together with attendant utility and sanitary facilities be completely flood proofed to that level to meet the flood proofing standard specified in Article 6.3., paragraph 5.b.(2).

(10) Adequate drainage paths around structures shall be provided on slopes to guide water away from structures.

Sec. 5.3.4 Variance procedures.

A. Designation of Variance and Appeals Board. The Board of Adjustment as established by the Board shall hear and decide appeals and requests for variances from the requirements of Article 6.3. Flood Plain Overlay Zone.

B. Duties of Variance and Appeals Board. The Board of Adjustment shall hear and decide appeals when it is alleged an error in any requirement, decision, or determination is made by the Flood Plain Administrator in the enforcement or administration of Article 6.3. Flood Plain Overlay Zone any person aggrieved by the decision of the Board of Adjustment may appeal such decision to the Circuit Court.

C. Variance Procedures. In acting upon such applications, the Board of Adjustment shall consider all technical evaluations, all relevant factors, standards specified in other sections of Article 6.3. Flood Plain Overlay Zone, and:

(1) The danger that materials may be swept onto other lands to the injury of others;

(2) The danger of life and property due to flooding or erosion damage;

(3) The susceptibility of the proposed facility and its contents to flood damage and the effect of such damage on the individual owner;

(4) The importance of the services provided by the proposed facility to the community;

(5) The necessity to the facility of a waterfront location, where applicable;

(6) The availability of alternative locations for the proposed use which are not subject to flooding or erosion damage;

(7) The compatibility of the proposed use with existing and anticipated development;

(8) The relationship of the proposed use to the comprehensive plan and flood plain management program for that area;

(9) The safety of access to the property in times of flood for ordinary and emergency vehicles;

(10) The expected heights, velocity, duration, rate of rise, and sediment of transport of the flood waters and the effects of wave action, if applicable, expected at the site; and

(11) The costs of providing governmental services during and after flood conditions, including maintenance and repair of public utilities and facilities such as sewer, gas, electrical, and water systems, and streets and bridges

D. Conditions for Variances.

(1) Variances shall only be issued when there is:

(a) A showing of good and sufficient cause;

(b) A determination that failure to grant the variance would result in exceptional hardship; and

(c) A determination that the granting of a variance will not result in increased flood heights, additional threats to public expense, create nuisance, cause fraud on or victimization of the public, or conflict with existing local laws, ordinances or codes.

(2) Variances shall only be issued upon a determination that the variance is the minimum necessary deviation from the requirements of Article 6.3. Flood Plain Overlay Zone.

(3) The Flood Plain Administrator shall maintain the records of all variance actions, including justification for their issuance or denial, and report such variances in the community's NFIP Biennial Report or upon request to FEMA and the State of Florida, NFIP Coordinating Office.

(4) The Board of Adjustment may attach such conditions to the granting of variances as it deems necessary to further the purposes of Article 6.3. Flood Plain Overlay Zone.

E. Variance Notification. Any applicant to whom a variance is granted shall be given written notice over the signature of a community official that:

(1) The issuance of a variance to construct a structure below the base flood elevation will result in increased premium rates, and

(2) Such construction below the base flood level increases risks to life and property.

A copy of the notice shall be recorded by the Flood Plain Administrator in the Office of the Clerk of Court and shall be recorded in a manner so that it appears in the chain of title of the affected parcel of land.

F. Historic Structures. Variances may be issued for the repair or rehabilitation of "historic" structures - meeting the definition in Article 6.3. Flood Plain Overlay Zone - upon a determination that the proposed repair or rehabilitation will not preclude the structure's continued designation as a "historic" structure

G. Structures in Regulatory Floodway. Variances shall not be issued within any designated floodway if any impact in flood conditions or increase in flood levels during the base flood discharge would result.

H. Severability. If any section, clause, sentence, or phrase of Article 6.3 Flood Plain Overlay Zone is held to be invalid or unconstitutional by any court of competent jurisdiction, then said holding shall in no way effect the validity of the remaining portions of Article 6.3. Flood Plain Overlay Zone.

Sec. 5.3.5 Duties of the Flood Plain Administrator shall include, but are not be limited to:

A. Review permits to assure sites are reasonably safe from flooding;

B. Review all development permits to assure that the permit requirements of Article 6.3. Flood Plain Overlay Zone have been satisfied;

C. Advise permittee that additional Federal, State of Florida, or local permits may be required, and if such additional permits are necessary, especially as it relates to FS 161.053; 320.8249; 320.8359; 373.036; 380.05; 381.0065, and 553, Part IV, require that copies of such permits be provided and maintained on file with the development permit;

D. Notify adjacent communities, the Department of Economic Opportunity, Division of Emergency Management, the Water Management Districts, the Federal Emergency Management Agency and other Federal and/or State of Florida agencies with statutory or regulatory authority prior to any alteration or relocation of a watercourse;

E. Assure that maintenance is provided within the altered or relocated portion of said watercourse so that the flood-carrying capacity is maintained;

F. Verify and record the actual elevation (based on an approved datum) of the lowest floor (A-Zones) of all new or substantially improved buildings, in accordance with Article 6.3 paragraphs 5.b.(1) and (2);

G. Verify and record the actual elevation (based on an approved datum) to which the new or

substantially improved buildings have been flood proofed, in accordance with Article 6.3 paragraph 5.b.(2);

H. Review certified plans and specifications for compliance. When flood proofing is utilized for a particular building, certification shall be obtained from a professional engineer, licensed in the State of Florida, certifying that all areas of the building below the required elevation are water tight with walls substantially impermeable to the passage of water, and use structural components having the capability of resisting hydrostatic and hydrodynamic loads and the effects of buoyancy in compliance with Article 6.3., paragraph 5.b.(2).

I. Interpret the exact location of boundaries of the areas of special flood hazard. When there appears to be a conflict between a mapped boundary and actual field conditions, the flood plain Administrator shall make the necessary interpretation;

J. When base flood elevation data or floodway data have not been provided in accordance with Article 6.3., paragraph 3.b. the Flood Plain Administrator shall obtain, review and reasonably utilize any base flood elevation and floodway data available from a Federal, State of Florida, or any other source, in order to administer the provisions of Article 6.3., paragraph 5;

K. Coordinate all change requests to the FIS, FIRM and FBFM with the requester, State of Florida, and FEMA, and

L. Where Base Flood Elevation is utilized, obtain and maintain records of lowest floor and flood proofing elevations for new construction and substantial improvements in accordance with Article 6.3., paragraphs 5.b.(1) and (2), respectively.

Sec. 5.3.6 Submittal requirements.

A. Permit Procedures. Application for a Development Permit shall be made to the Flood Plain Administrator on applicable major, minor or building permit site plan as required by Article 2 prior to any development activities, and may include, but not be limited to, the following plans, in duplicate, drawn to scale showing the nature, location, dimensions, and elevations of the area in question; existing or proposed structures, earthen fill, storage of materials or equipment, drainage facilities, and the location of the foregoing. Specifically, the following information is required:

(1) Elevation based on an approved datum of the proposed lowest floor (including basement) of all buildings;

(2) Elevation based on an approved datum to which any non-residential building will be flood proofed;

(3) Certificate from a professional engineer, licensed by the State of Florida, that the non-residential flood proofed building will meet the flood proofing criteria in Article 6.3., paragraphs 4.a. (2) and 5.b. (2);

(4) Description of the extent to which any watercourse will be altered or relocated as a result of proposed development; and

(5) Bench mark location on the property with elevation shall be clearly shown and staked.

B. Construction Stage:

Within twenty-one (21) calendar days of placement of the lowest floor, or flood proofing by whatever construction means, or bottom of the lowest horizontal structural member it shall be the duty of the permit holder to submit to the Flood Plain Administrator a certification of the elevation of the lowest floor or flood proofed elevation, or bottom of the lowest horizontal structural member as built, based on approved datum. Said certification shall be prepared by or under the direct supervision of the appropriate professional, licensed by the State of Florida. When flood proofing is utilized for a particular building said certification shall be prepared by or under the direct supervision of a professional engineer, licensed by the State of Florida. Any work undertaken prior to submission

of the certification shall be at the permit holder's risk. The Flood Plain Administrator shall review the lowest floor and flood proofing elevation survey data submitted. The permit holder immediately, and prior to further progressive work being permitted to proceed, shall correct violations detected by such review. Failure to submit the survey or failure to make said corrections required hereby shall be cause to issue a stop-work order for the project.

Sec. 5.3.7 Completion and close out.

A. Building permit issuance.

B. Final inspection, completed elevation certificate, including finished floor and lowest grade adjacent to improvement is provided to the Growth Services Department.

C. A certificate of occupancy shall constitute the completion of this process.

D. Expiration. This overlay zone approval shall expire in two years or the duration of an unexpired building permit obtained within that time period.

Division 4 Springs Protection Overlay Zone (SPOZ)

Sec. 5.4.1 Purpose and intent.

The purpose and intent of the Springs Protection Overlay Zone is to protect and preserve the quality and quantity of the Floridan Aquifer underlying all of Marion County, as well as the environmental, recreational, and economic values of Silver Springs and Rainbow Springs in the interest of public health, safety and general welfare. This is to be accomplished by regulating land uses and activities which can adversely impact the quality and quantity of groundwater.

Sec. 5.4.2 Applicability.

A. Any new development, redevelopment, or expansion of existing development, including residential and non-residential projects, shall be subject to SPOZ requirements, except those developments with an unexpired development order prior to August 1, 2009 unless specifically required by the Board as a condition of approval.

Sec. 5.4.3 Boundaries.

The Springs Protection Overlay Zone is comprised of a primary and a secondary zone and shall encompass the land areas as they appear on the Comprehensive Plan Future Land Use Map 14, Springs Protection Zones, as amended. When a parcel crosses multiple springs protection zones, the parcel shall be subject to the provisions of the zone that the majority of the parcel falls within.

Sec. 5.4.4 Uses within the SPOZ.

A. Prohibited Uses. The expansion of existing or new uses and activities, as listed below, shall be prohibited within the primary zone:

(1) Junk yards.

(2) Construction and Demolition Debris Disposal Facilities in locations that (a) exhibit Karst geology at or below land surface and (b) fall within a MCAVA aquifer vulnerability category of "more" or "most", unless the applicant demonstrates, based on credible scientific data and information (including, without limitation, the information required to be submitted pursuant to subsection B.5.(a), below, or on any additional measures the owner proposes (such as the provision of a liner and leachate collection system), that the C&DD Disposal Facility will not pose a potential threat to groundwater quality.

(3) Any of the following uses unless the facility is in compliance with FDEP:

(a) Auto and marine paint and body shops.

(b) Printing shops.

(c) Car washes

(d) Dry cleaning.

(e) Carpet cleaning operations that discharge at the facility.

(f) Metal plating.

(g) Medical, dental, and veterinarian offices and laboratories.

(h) Auto, recreational vehicle, commercial truck, tractor-trailer, farm tractor, heavy machinery, or small engine parts, service and repair operations;

(4) Heavy industrial and commercial uses, including new and expanding permitted and special uses allowed exclusively in B-5, I-C, or M-2 zoning categories, unless the owner demonstrates to the Planning/Zoning Manager, based on credible scientific data and information, that the proposed use will not pose a potential threat to groundwater quality.

B. Permitted Uses with Conditions. Unless otherwise prohibited, the following uses in the SPOZ are subject to the design requirements set forth below.

(1) New and expanding golf courses.

(a) Each golf course shall be designed, constructed, and managed in accordance with a Natural Resources Management Plan (NRMP) that complies with the BMPs outlined in Best Management Practices for the Enhancement of Environmental Quality on Florida Golf Courses, FDEP 2007, as amended.

(b) The NRMP shall include, at a minimum, the components as included within the FDEP publication *Protecting Florida's Springs: Land Use Planning Strategies and Best Management Practices,* as amended.

1. The NRMP shall be submitted for review and approval with the initial development application (Mass Grading, Master Plan, or Improvement Plan). The development application shall include a statement identifying that an NRMP has been established and accompanies the application.

2. After the NRMP is approved, any changes shall be submitted for review and approval to the Office of the County Engineer.

3. The As-Built/Record Survey shall be accompanied by a certification by a design professional and the owner stating the project complies with the NRMP and shall be managed as such.

4. Annual certification that the golf course is being managed in compliance with the NRMP shall be submitted to the Office of the County Engineer.

(c) Golf course irrigation coverage shall be limited as follows:

1. Only tees, fairways, greens, and practice areas (driving ranges and putting green areas) may be irrigated with high volume irrigation.

2. Areas between the primary rough and the boundaries of the golf course (as shown on the development application) shall be Marion Friendly Landscape Areas (MFLA) and indicated as such on the development application plans as follows:

a. In the primary zone, 70 percent, or greater.

b. In the secondary zone, 50 percent, or greater.

3. Temporary irrigation may be utilized within the MFLAs as necessary to establish the appropriate plant species within those areas.

(2) New and existing junk yards within the secondary zone.

All junk yards shall comply with the same standards as the FDEP Conditionally Exempt Small Quantity Generators (CESQG), Small Quantity Generator, or Large Quantity Generator

requirements and shall be subject to biennial inspections by the Marion County Solid Waste Department.

(3) New and expanding uses which store and/or stock fertilizers, pesticides, and pool and spa chemicals. Fertilizers, pesticides, pool and spa chemicals, and other similarly hazardous materials that are stored or stocked for wholesale distribution, retail sale, or commercial use shall be protected from rainfall with a permanent roof structure, or by other effective means as approved by the County. When such materials are stored in liquid tanks regulated by FDEP, these shall adhere to FDEP standards and are not required to be under a roof structure. Runoff from roof structures and surrounding areas shall be effectively diverted away from these storage/stock areas and any runoff originating from within these areas shall be properly contained, disposed of, and/or used consistent with best management practices. Proper use is to be in accordance with the label instructions, otherwise, it must be treated as waste, including potentially hazardous waste.

(4) Construction and Demolition Debris (C&DD) Disposal Facilities. Approval of any new or expanding C&DD disposal facility located within a MCAVA category of "more" or "most" vulnerable shall be subject to the following requirements:

(a) Report Required Before Approval. A report generated based on the following analysis and data, which is signed and sealed by a Florida Registered Professional Geologist or Professional Engineer, shall be submitted to the County before approval, and shall contain, or be based upon, the following:

1. Drilled borings will be installed in order to determine and characterize the subsurface lithology below the proposed landfill site. The borings will be sufficient to determine geological cross-section across the entire site, will consist of soil profiling using the Unified Soil Classification System (ASTM D2487), and will include a minimum of two borings per five acre of proposed landfill area, with a minimum of four borings. The borings must be sufficient enough to plot the geological cross-section across two axis. The cross-section will also include a designation and description of the shallow water bearing unit, its classification (e.g.: G-I, G-II, G-III), and any confining or semi-confining layers separating the shallow water bearing unit from the Floridan Aquifer. The cross section shall also include a description of the Floridan Aquifer and its location in relation to the proposed bottom of the landfill. An analysis shall also be made regarding the integrity of the confining or semi-confining layer, if present, and prospect of open conduits from the proposed landfill to the Floridan Aquifer or other sensitive water bodies within one-half mile of the proposed landfill area. The description shall at a minimum include porosity or effective porosity, horizontal hydraulic conductivity, vertical permeability, and depth and lithology of the shallow water bearing unit, confining layers and aquifer.

2. A report signed and sealed by a Florida Registered Professional Geologist or Professional Engineer shall be submitted regarding observed, or the likelihood of, Karst Features within the proposed landfill area, based upon the borings and other information. Ground Penetrating Radar (GPR) shall be used, if determined applicable by the Registered Geologist or Professional Engineer, to assist in this determination. The determination of the existence or likelihood of Karst Features will be made by the Registered Geologist or Professional Engineer based on the subsurface investigation.

3. Soil samples will be collected at a minimum of either three of the borings, or one per every five acres, whichever is greater, from the zones below the bottom of the landfill and the shallowest water bearing unit, and the shallow water bearing unit and the underlying Confining Unit; the required depth of sampling in the Confining Unit may be limited to two feet, and complete penetration of the Confining Unit shall be avoided.

The samples shall be submitted for laboratory analysis for the determination of hydraulic conductivity, soil porosity, percent fines, moisture content, plasticity, grain size distribution and organic contents. Field measurements shall be taken from a minimum of three locations, or one for every five acres, whichever is greater. The foregoing requirements are in addition to those set forth in FAC 62-701.

(b) Prohibition on Material. The on-site disposal of Copper Chromium Arsenic treated lumber and any debris not specifically classified as "construction and demolition debris" pursuant to Section 62-701.200, FAC shall be prohibited.

(c) Separation Layer. The separation distance between the extent of fill and the maximum predicted elevation of water table, seasonal high water table plus one foot, or consistent lime rock formations or layers (if water bearing), whichever is higher, shall be:

1. At least 15 feet if the average permeability of the separation layer is greater than $1x10^{-6}$ cm/s, except that no portion of the layer may be greater than $1x10^{-5}$ cm/s; or,
2. Five feet, of which a minimum of two feet shall have a uniform permeability no greater that $1x10^{-6}$ cm/s.

(d) Leachate Containment. A leachate containment and management plan shall be provided for any leachate, or stormwater containing leachate, that may bypass the separation layer, and shall ensure that leachate does not contaminate the Floridan Aquifer system through soil materials, retention areas or other conduits occurring beyond the extent of fill. The management plan may require, but not be limited to, extending the separation layer under subsection (c), above, beyond the extent of fill.

(e) Liner and Leachate Collection. A liner and leachate collection system shall be provided in accordance with applicable FDEP standards, if the report under subsection 5.(a), above, indicates any of the following:

1. The immediate water bearing unit is the Floridan Aquifer; or
2. Karst Features are observed within the proposed landfill area, unless the features are extremely localized and are effectively remediated according a remediation plan that is (1) compliant with applicable state and local regulations and (2) signed and sealed by a Florida Registered Professional Geologist or Professional Engineer; or
3. The formation of Karst Features is likely within the proposed landfill area, as determined by a Florida Registered Professional Geologist or Professional Engineer, based on the geological and hydrogeological investigation; or
4. Other open conduits or breaches in the Confining Unit which would allow leachate to enter the Floridan Aquifer either exist or are likely to exist.

(f) Groundwater Monitoring Plan. A ground water monitoring plan, which meets the criteria set forth in FAC 62-701.510 and 62-550, except as modified below, shall be submitted, implemented and maintained by the owner or operator.

1. All compliance monitoring wells will be installed in accordance with ASTM D5092.
2. Compliance monitoring wells shall be installed around the disposal facility at a spacing of no more than 1,000 feet apart across the downgradient direction of groundwater flow, and 2,000 feet apart along the upgradient and cross-gradient direction of flow. A minimum of three wells will be installed on the downgradient side and a minimum of two wells on each of the upgradient and cross-gradient sides. The wells will be installed using ten feet of screen intersecting the water table two feet and will use a slot size appropriate to the grain size distribution of the screened interval soils.
3. Compliance wells will be analyzed for the constituents required by FAC 62-701. The wells

required by the C&DD Disposal Facility's FDEP permit will be sampled on a semi-annual basis (i.e., every six months). All additional wells installed pursuant to the requirements of this subsection will be sampled on an annual basis.

(g) Grading and Landscaping. As the portions of the facility are filled, the side slopes shall be graded, covered with soil, and landscaped at a maximum two-acre frequency, as measured along the face of the slope.

(h) Final Cover. When filled to capacity, the facility shall have a final cover designed to prevent ponding and low spots, maximize runoff, limit infiltration and erosion, and support the required landscaping. Soil cover on finished sloped faces (where maximum slope is 3H:1V) shall have a maximum average permeability of $1x10^{-4}$ cm/s. The crown (top, where slope is less than 3H:1V) of the finished facility shall have an average maximum permeability of $1x10^{-5}$ cm/s. The permeability of the finished slope and crown shall be determined by testing performed by a Florida Registered Professional Geologist or Professional Engineer. The cover can be constructed of a soil layer, geomembrane, or combination of both in order to achieve the appropriate permeability and erosion control, to the extent permitted by FDEP regulations.

(i) Monitoring. The owner or operator of the construction and demolition debris disposal facility, or their successors or assigns, shall continue to monitor and maintain the facility for ten years from the date of closing. However, no financial assurance requirements shall be maintained beyond the initial five-year period required by FDEP regulations unless monitoring data indicates that the facility is impacting groundwater at concentrations which may be expected to result in violations of FDEP water quality standards, in which case financial assurance shall continue to be provided beyond five years. Compliance well monitoring shall be on an annual basis, with alternating wells to be tested every other year (i.e. 50 percent of wells tested one year, and 50 percent the next). The ten year time period shall be extended if assessment monitoring or corrective action has been initiated in accordance with Section 62-701.510(7), Florida Administrative Code, or if site-specific conditions make it likely that any contamination which may emanate from the disposal area would not be detected within ten years.

(j) Signage. The owner shall post signs at each entrance indicating the name of the operating authority, traffic flow, hours of operation and restrictions and conditions of disposal.

(k) Declaration to the public. After closing operations are approved by the Department, the facility owner or operator shall file a declaration to the public in the deed records in the office of the Marion County Clerk of Circuit Court. The declaration shall include a legal description of the property on which the facility is located and a site plan specifying the area actually filled with construction and demolition debris. The declaration shall also include a notice that any future owner or user of the site should consult with the FDEP prior to planning or initiating any activity involving the disturbance of the facility's cover, monitoring system or other control structures. A certified copy of the declaration shall be filed with the Zoning Official.

(l) Application Review, Construction Certification and Fees. All construction shall be conducted in accordance with a construction quality assurance/quality control (CQA) plan to be submitted with other application materials for approval. The CQA plan shall specify soils testing and analysis in accordance with generally accepted engineering procedures, and outline project specifications and construction requirements in accordance with generally accepted industry standards. The plan shall also specify performance criteria for soil separation and cover layers, and provide quality control testing procedures and minimum sampling frequencies. In addition, the plan shall define the responsibilities of the parties that

will be involved in soil separation and cover layer construction, and shall present minimum qualifications of each party to fulfill their identified responsibilities. Marion County shall reserve the right to hire an independent, Professional Engineer(s) to provide review of the CQA plan, geotechnical information and other application materials, and to inspect and certify construction activities and completion. The County may further require the applicant to compensate the County for the lesser of (a) costs incurred exclusively for such professional services, according to a fee set annually by resolution of the Board, or (b) actual contractual costs for services rendered for the specific project.

(m) Relationship to FDEP Regulations. Where the provisions of this part conflict with the requirements of the FDEP, the more restrictive provisions shall apply.

(5) Mining Operations. New and expanded mining operations, where at least 35 percent of the proposed excavated area is located in a MCAVA category of "more" or "most " vulnerable; or the operations will excavate within 15 feet of predicted height of potentiometric surface or lime rock, whichever is higher, shall be subject to the following minimum requirements:

(a) Major Site Plan which shall also include:

1. All surface drainage from site runoff shall be directed away from mined area to avoid groundwater contamination. If necessary, grading to alter the direction of flow and/or construction of berms to direct runoff around the mined area may be required.
2. Pollutants or substances of any kind which may be detrimental to water quality shall not be stored in the mined area. In addition, all fueling, lubrication and any other equipment maintenance activity for equipment that is reasonably maintained outside of the mined area, shall be performed beyond the edge of the mined area, and additional spill containment shall be provided
3. Proposed location of storage tanks, refueling areas and equipment maintenance areas;
4. Existing potable water wells within 500 feet of the site boundaries;
5. Existing and proposed water bodies; and
6. Existing and proposed temporary and permanent stormwater management facilities;
7. Copy of hazardous materials management plan consistent with the requirements of FDEP and this Section;
8. The provided aerial photograph shall indicate property lines and areas proposed for mining, excavation or fill;

(b) Copy of Reclamation Plan, prepared in compliance with FDEP requirements, and including post-development vegetative buffer plan;

(c) All mines shall be required to have an approved Reclamation Plan that, in addition to meeting all FDEP requirements, includes the following measures to protect water quality in the surficial and Floridan Aquifer:

1. Where the excavated area will be reclaimed and developed with an urban land use or rural development, clean fill and/or soil with similar or lower permeability and recharge rate than the original strata shall be replaced to a minimum depth of 15 feet over potentiometric surface or top of limerock, whichever is higher, not to exceed natural ground elevation.
2. For any mine where reclamation results in a water body connected to the surficial or Floridan Aquifer and/or exposed limerock, a vegetative buffer along the edge of the water body or exposed limerock shall be provided according to the following:
   a. The buffer shall be at least 150 feet wide, as measured horizontally from the seasonal high water line, excavated escarpment or highest closed contour of the

mined area, as applicable. For water bodies, the buffer shall, additionally, extend from the outer edge of the minimum buffer width to the edge of water. The minimum buffer width may be reduced if a comparable treatment system designed by a licensed professional is approved through the development review process.

b. The buffer shall be permanently protected through an easement granted to the county, or other county approved public or non-profit entity, on a county approved instrument recorded in the public record.

c. Vegetation within the easement shall consist of native or approved non-invasive and drought tolerant trees, shrubs, grasses and other ground covers, which shall be established according to a buffer landscaping plan submitted to the county for approval.

d. Only clean fill, as defined by FDEP, may be disposed of in the mined area.

(d) Copy of any required geotechnical report;

1. Cross-sectional of the proposed depth of areas to be mined or excavated and relationship to the potentiometric surface and geologic materials, based on test borings performed on the site;

2. Test borings shall be required to delineate geologic conditions, and to determine the interface between the surficial and Floridan aquifers and the locations of groundwater tables on a site. At a minimum, the test borings shall comply with the following:

a. Minimum depth. All borings shall be conducted to a depth of not less than ten feet below the deepest proposed mining or excavation, but no greater than ten feet below encountered limerock.

b. Maximum spacing. All borings shall be spaced at 500 foot intervals in two transverse directions, except limerock mine borings will be spaced at 1,000 foot intervals in two transverse directions.

c. Log content. The boring log shall indicate the geologic description and thickness of all strata encountered, including topsoil, overburden, mineral deposit or material to be mined or excavated and material immediately underlying the mineral deposit or material, and the position of the groundwater.

d. All borings shall be properly filled or grouted.

(e) Draft copy of proposed conservation easement document, if applicable.

(f) All applicable requirements of Article 6.x, development in high recharge areas and karst sensitive areas.

(6) Heavy Industrial and Commercial Uses. Heavy industrial and commercial uses, including new and expanding permitted and special uses allowed exclusively in B-5, I-C, or M-2 zoning categories shall:

(a) Conduct any manufacturing and repair operations under a roofed structure.

(b) Provide cover over any non-serviceable machinery, non-serviceable equipment, or used parts which are potential sources of pollutants or substances of any kind which may be detrimental to water quality.

(7) Agricultural Uses.

(a) It is prohibited to apply fertilizer, manure or residuals on pastureland, cropland, tree farm, ornamental nursery, or other agricultural field at rates that exceed UF/IFAS recommendations, or use thereof in a manner that is inconsistent with any applicable BMP's adopted by the State of Florida or the Board. In no case may nitrogen be applied at a rate exceeding 50 pounds per acre per year on pasture or grasslands used for incidental grazing

(incidental grazing being defined as grazing that is not the primary feed source of the grazing animals). If the principal objective of the grassland is to be a primary feed source or for hay production and harvesting, then higher levels of nitrogen may be applied, provided the application rate is in accordance with a nutrient management plan that:

1. Has been prepared for the farm by a professional qualified to prepare such plans pursuant to requirements of the USDA-NRCS; or
2. Is in compliance with applicable agricultural nutrient management BMPs adopted by the State of Florida.

(b) Unless a Special Use Permit is granted by the County, any new or expanding Concentrated Animal Feeding Operation, pursuant to FAC 62-670.200, that is operating at a density greater than one animal unit per acre shall be prohibited in the primary zone.

(c) Manure management shall be as follows:

1. Manure may only be removed by an appropriately licensed commercial hauling operation that is able to ensure any manure disposed of is done so in compliance with local, state and federal regulations.
2. It is prohibited to dump, place, or stockpile manure in a sinkhole, karst feature, wetland, stream, lake, ephemeral waterway, other surface water feature, excavated pit, or mine.
3. It is prohibited to dump, place, or stockpile three cubic yards or more of manure within 200 feet of a sinkhole, karst feature, wetland, stream, lake, ephemeral waterway, other surface water feature, excavated pit, or mine.
4. It shall be prohibited, after August 1, 2009 to add any manure to an existing stockpile or to existing stockpiles that cumulatively exceed the greater of (a) the amount of manure generated on the farm within a three-month period or (b) 25 cubic yards times the size of the farm operation (in contiguous acres). The amount of manure generated within a three-month timeframe shall be calculated by multiplying the total number of animals units on the farm by six cubic yards. Alternatively, the owner may provide substantial evidence that stockpiled manure has not accumulated for more than three months, including but not limited to invoices/ receipts from a licensed hauling operation. Upon owner request, the Zoning Official may grant a waiver from these stockpiling limitations, subject to the following:
   a. The owner can demonstrate, based on credible scientific data including but not limited to groundwater quality monitoring data, that the manure stockpile is not contributing and will not contribute to an increase in the concentration of nitrates in ground or surface water down gradient from site;
   b. The manure is effectively covered and located in a manner that prevents rainfall and stormwater from coming into contact with the stockpile;
   c. The manure is contained within a manure storage facility designed, constructed and maintained in accordance with applicable US Department of Agriculture Natural Resources Conservation Service conservation practices standards and specifications; or
   d. The manure is being managed as part of a composting operation that is in compliance with a valid permit issued by the FDEP for such operations, or is manure produced solely on the farm where it is being composted and is managed in compliance with applicable BMP's.
5. Any new or expanding facility involving the production of plants useful to man of ten acres or greater, or greenhouse or nursery operation of five acres or greater shall abide by BMPS upon adoption by the State, provide a copy of the NOI complying with the

BMPs to the Zoning Official; and bring the business into compliance with such BMPs within five years of filing the NOI.

Division 5 Military Operating Area (MOA)

Sec. 5.5.1 Purpose and intent.

A. The MOA is intended to acknowledge, support, and protect the continued and safe operation of Federal and/or State military installations located within, and in proximity to, Marion County while providing for reasonable use and development of land consistent with Chapter 163.3175, FS, Marion County Comprehensive Plan Future Land Use Element Appendix A, Section A-5 – *Military Operating Area*, and the US Navy Jacksonville Bombing Range Air Installation Study(ies) (RAICUZ and/or Land Use), completed consistent and/or in conjunction with OPNAVINST 3550.1A and published by the US Navy, as amended.

B. The MOA is a method to advise property owners, residents, and visitors of the potential to experience effects from identified military installations which are the basis for the overall MOA and specific sub-areas which are subject to specialized development regulations intended to limit and/or manage the encroachment of incompatible development.

C. The specialized development regulations within this division are intended to supplement other regulations within this Code and in the event of conflicts, the more restrictive provisions will apply, particularly with regard to preserving and maintaining the operational capabilities of the military installations within the MOA.

Sec. 5.5.2 Applicability.

A. MOA provisions shall apply to all lands and/or development within unincorporated Marion County and the established MOA, as set forth in this division.

B. MOA military installations:

(1) US Jacksonville Training Range Complex – Pinecastle Range

(2) US Jacksonville Training Range Complex – Lake George Range

(3) US Jacksonville Training Range Complex – Rodman Range

C. The MOA includes the geographic area listed in Table 5.5.2-1, Marion County Military Operating Area, and the following geographic sub-areas:

Table 5.5.2-1: Marion County Military Operating Area

Township	Range	Sections
11S	23E 24E	36 24-36
12S	23E 24E 25E	1, 11-15, 22-28, 32-36 All All
13S	23E 24E 25E 26E	1, 30, 32-36 All All All
	J.M. Hernandez Grant	All (aka Section 42)
14S	23E 24E 25E 26E	1-3, 11-13, 24-25 1-30, 32-36 All All

Table 5.5.2-1: Marion County Military Operating Area

15S	24E 25E 26 ½ E 26E	1-3, 10-14, 24 1-30, 32-36 All All
	Arredondo Grant	All (aka Section 37)
16S	25E 26E	1-4, 9-16, 21-28, 33-36 All
17S	25E 26E	1-3, 12 1-18, 20-27, 35-36

(1) The following MOA sub-areas are lands owned by the US Forest Service and managed jointly via interagency agreement between the US Forest Service and the US Navy, and as such, are not regulated as part of this MOA:

(a) Range Target and Buffer Area (RTBA),

(b) Range Safety Zone A (RSZ-A), and

(c) Range Safety Zone B (RSZ-B).

(2) The following are MOA sub-areas are regulated in accordance with this Division:

(a) Restricted Airspace (RESAIR) as provided in Table 5.5.2-2, MOA Restricted Airspace.

Table 5.5.2-2: MOA Restricted Airspace

Township	Range	Sections
11S	24E	24-25, 36
12S	24E 25E	1 3-10, 15-22, 25-29, 33-36
13S	24E 25E 26E	36 31-36 14, 31
	J.M. Hernandez Grant	That part lying SE of a line between the NW Corner of Section 36, Township 13S, Range 25E and the SW Corner of Section 14, Township 13S, Range 26E.
14S	24E 25E 26E	1, 12-13, 24-25, 36 All All
15S	25E 26 ½E 26E	1-5, 8-17, 20-28, 34-36 All All
	Arredondo Grant	All (aka Section 37)
16S	25E 26E	1-3,10-15, 23-26, 36 All
17S	26E	1-6, 8-15, 23-25

(b) Range Safety Zone C (RSZ-C) as provided in Table 5.6.2-2, MOA Range Safety Zone “C”.

Table 5.5.2-3: MOA Range Safety Zone "C"

East/West	Township	Range	Sections
West	12S	23E	35-36
	13S	23E 24E	1-3, 9-17, 21-28, 34-36 6-8, 17-21, 27-35
	14S	23E	1, 12
East	14S	24E 25E	1-18, 20-28, 34-36 7, 17-21, 28-34
	15S	24E 25E 26 ½ E 26E	1-2, 12 1-18, 20-28, 34-36 12-13, 24-25, 36 16-22, 25-36
		Arredondo Grant	That part lying SW of a line between the NE Corner of Section 25, Township 15S, Range 26E, and the NE Corner of Section 16, Township 15S, Range 26E.
	16S	25E 26E	1-3, 10-15, 23-26, 36 All
	17S	26E	1-5, 9-15, 23-25

Sec. 5.5.3 Design, development, and use standards and restrictions

A. All MOA area, including all sub-areas, as noted:

(1) Acknowledgment Military Operating Area (AMOA).

(a) Prior to the issuance of a building permit for construction, expansion, and/or renovation of a new or existing structure for human habitation/occupancy wherein a new Certificate of Occupancy/Final Inspection will be required prior to habitation/occupancy of the structure consistent with Florida Building Code, the property owner shall sign and submit a written acknowledgement that the project site is located within the Marion County Military Operating Area. The acknowledgement shall be recorded in the Marion County Official Records by the owner or permit applicant prior to issuance of the permit and shall conform to the following, allowing for the appropriate owner signature (e.g., individual, corporate, etc.):

ACKNOWLEDGEMENT OF MILITARY OPERATING AREA (AMOA)

(printed/typed name of property owner)
(printed/typed building permit number)
(printed/typed address of permitted structure)
(printed/typed parcel identification number of structure property)

I, the above stated, understand that my property located as referenced above and further described in the attached legal description, is located within the Marion County Military Operating Area as established by the Marion County Comprehensive Plan and Land Development Regulations, consistent with Chapter 163.3175, FS.

I acknowledge and understand that military operations may be conducted within the Military Operating Area as authorized by Federal and/or State agencies with such jurisdiction, and such operation may affect this property. I further understand that I should contact the appropriate Federal or State agency for information regarding such military operations.

Signature: …(signature of property owner)….
Date: …(date)….

(b) The requirement to complete and record the AMOA shall be deemed satisfied once a minimum of one executed AMOA has been recorded in the Marion County Official Records in regards to the permit's subject property, and the execution and recording of a new/additional AMOA for subsequent permits shall not be required.

(2) Height Limits. No structure shall be erected, and no vegetation shall be permitted to grow, that exceeds any of the following height limitations, subject to compliance with the most restrictive height limit applicable by area/sub-area designation:

(a) Military Operating Area: 500'

(b) Range Safety Zone "C" West: 400'

(c) Range Safety Zone "C" East: 300'

(d) Restricted Airspace: 200'

B. Restricted Airspace prohibited land uses:

(1) Any use which interferes with the lawful operation of an airborne aircraft.

(2) Any permanent use of any type which produces electronic interference with navigation signals or with radio communication between aircraft and the airport.

(3) Any airport obstruction, as prohibited by the Federal Aviation Administration.

C. East Range Safety Zone "C"

(1) Residential development shall comply with one of the following:

(a) A gross density greater than one dwelling unit per 10 acres shall be prohibited;

(b) A legally created parcel of record established prior to *(date of new LDC adoption)*, or a lot/parcel within a subdivision eligible for continued development under Section 4.#.# (FLUE App A-4.2), may be eligible for one single-family residence, subject to compliance with the underlying zoning classification, DOH standards, and the other applicable design standards within this section; or

(c) A parcel is eligible for family division consistent with Section 4.#.# (*family division*) and subject to the following requirements:

1. No resulting parcel (parent and each division) shall be less than two (2) acres in size,
2. An AMOA shall be executed and recorded for all resulting parcels (parent and each division), and
3. Development of each parcel shall be subject to compliance with the underlying zoning classification, DOH standards, and the other applicable design standards within this Section.

(2) Non-residential development shall comply with one of the following:

(a) No new lots/parcels shall be less than ten (10) acres in size; or

(b) A legally created parcel of record established prior to *(date of new LDC adoption)*, or a lot/parcel within a subdivision eligible for continued development under Section 4.#.# (FLUE

App A-4.2), may be eligible for development, subject to compliance with the underlying zoning classification, DOH standards, and the other applicable design standards within this Section.

(3) Prohibited land uses:

(a) The storage of explosive materials above the ground.

(b) Any use which interferes with the lawful operation of an airborne aircraft.

(c) Any permanent use of any type which produces electronic interference with navigation signals or with radio communication between aircraft and the airport.

(d) Any airport obstruction, as prohibited by the Federal Aviation Administration.

(4) A private property owner participating in one of the Marion County Transfer of Development Rights Programs in Section 3.#.#, may be eligible for up to a 20% bonus in Transfer of Development Credits as determined by the Board, depending upon the location and extent of the Conservation Easement provided by the owner.

D. West Range Safety Zone "C"

(1) Prohibited land uses:

(a) The storage of explosive materials above the ground.

(b) Any use which interferes with the lawful operation of an airborne aircraft.

(c) Any permanent use of any type which produces electronic interference with navigation signals or with radio communication between aircraft and the airport.

(d) Any airport obstruction, as prohibited by the Federal Aviation Administration.

(2) A private property owner participating in one of the Marion County Transfer of Development Rights Programs in Section 3.#.#, may be eligible for up to a 10 percent bonus in Transfer of Development Credits as determined by the Board, depending upon the location and extent of the Conservation Easement provided by the owner.

Division 6 Scenic Roads Area (SRA)

Sec. 5.6.1 Purpose and Intent

Marion County residents and visitors enjoy the County's unique visual character including, but not limited to, nature, habitat, historical/cultural resources, and rural/equine communities, particularly when travelling along various roadways in the County. The Scenic Roads Area functions to identify scenic roads, and establish regulations to support, maintain, and enhance roadway travel experiences while maintaining the health, safety, and welfare of the traveling public and protecting private property rights.

Sec. 5.6.2 SRA implementation and scenic road designations.

A. The SRA provisions, also hereby known as the "Marion County Scenic Roads Program," shall serve as the specific regulations regarding the scenic roads identified herein.

B. Scenic Roads Master Plan.

(1) The Board shall maintain a Scenic Roads Master Plan (SRMP) to provide guidelines and strategies to enhance scenic roads within Marion County and shall not be construed as a regulatory document.

(2) Any SRMP approved by the Board shall be produced and published by the Growth Services Department.

C. The visual character of a scenic road includes two general areas: within the road right-of-way and the adjoining surrounding area. The road right-of-way subsequently includes two general components: the various infrastructure (e.g., vehicle driving surface, traffic control devices, non-

automotive travel surfaces, driveways, utilities, stormwater infrastructure, etc.) and the vegetative/landscape/turf material occupying the remainder of the right-of-way. The focus of the SRA is the area within the road right-of-way.

D. Scenic roads shall be designated by the Board following review and recommendation by staff and the Land Development Review Commission (LDRC) consistent with Section 5.6.6.

E. Deviations or exemptions from the SRA standards shall be considered through the amendment/exemption process outlined in Section 5.6.6.

F. Types of scenic designations

(1) Scenic route – A series of roads that form an alternate route to a main thoroughfare, that may comprise more than one road, forming a continuous route that links sites and/or areas of interest, such as scenic areas, historic sites, parks, and other environmentally significant areas.

(2) Scenic road – A road that travels through, or along, a unique and aesthetic landscape such as scenic areas, historic sites, parks, and other environmentally significant areas .

(3) Rustic road/route – A road or series of roads representing travel modes and patterns of the past and displaying historic characteristics (e.g., unpaved, narrow width, physical proximity to natural environment, etc.), typically suitable for low travel speeds.

Sec. 5.6.3 Designated facilities.

A. Scenic route: None at this time.

B. Scenic roads: (ORIGINAL ORDINANCE NUMBER TO BE DELETED BEFORE FINAL ADOPTION)

(1) NW Hwy 25A (Old Gainesville Road), from W Hwy 316 south to W Hwy 329. (2001-19)

(2) SW Hwy 312 (SW 87th Place), from S Hwy 475A (SW 27th Avenue) east to S Hwy 475 (S Magnolia Avenue). (1997-1)

(3) NW Hwy 320, from the Marion/Levy County Line east to the McIntosh Town Limit. (2001-19)

(4) W Hwy 328, from N US Hwy 41 east to 1000 feet west of W Hwy 40. (2001-19)

(5) SE Hwy 467 (SE 36th Avenue), from SE 95th Street (Redding Lane) south to SE 110th Street (Turkey Foot Road). (1997-1)

(6) S Hwy 475, from S Hwy 27/301/441 (S Pine Avenue) south to the Marion/Sumter County Line. (1997-1)

(7) S Hwy 475A (SW 27th Avenue / Shady Road), from SW 24th Avenue (Paddock Park/El Dorado Entrance) south to the Cross Florida Greenway south boundary. (1997-1 and 2011-45)

(8) SW Hwy 475B (SW 107th Place), from S Hwy 475A (SW 27th Avenue) east to S Hwy 475 (S Magnolia Avenue). (1997-1)

(9) NW/NE 49th Street, from West Anthony Road east to NE Hwy 200A (NE Jacksonville Road). (2001-19)

(10) NW 100th Street, from NW Hwy 25A (NW Gainesville Road) east to NE Hwy 200A (NE Jacksonville Road). (2001-19)

(11) SE 25th Avenue, from SE 80th Street south to SE 110th Street. (1997-1)

(12) SE 26th Terrace Road, from SE 38th Street (Citrus Drive) south to SE 45th Street. (1997-1)

(13) SE 30th Court: SE 45th Street to SE 52nd Street; SE 52nd Street to SE 56th Street ; SE 56th Street from SE 30th Court to SE 39th Avenue; SE 39th Avenue from SE 56th Street to SE 52nd Street. (1997-1)

(14) SE 36th Avenue, from SE 62nd Street south to SE 73rd Street. (1997-1)

(15) SE 38th Street, from SE 36th Avenue, east to SE 44th Avenue Road. (1997-1)

(16) SE 44th Avenue Road, from SE 38th Street south to SE 52nd Street. (1997-1)

(17) SE 41st Court, from SE 52nd Street south to SE 80th Street. (1997-1)

(18) SE 59th Street, from S Hwy 475 (S Magnolia Avenue / at the Shady Hill School) east to S Hwy 27/301/441 (S Pine Avenue). (1997-1)

(19) SE 62nd Street, from S Hwy 27/301/441 (S Pine Avenue) east to SE 36th Avenue. (1997-1)

(20) SE 73rd Street, from S Hwy 27/301/441 east to SE 41st Court. (1997-1)

(21) SE 95th Street (Redding Lane), from S Hwy 475 (S Magnolia Avenue) east to S Hwy 27/301/441 (S US Hwy 441). (1997-1)

(22) SE 100th Street, from S Hwy 467 (SE 25th Avenue) east to S Hwy 27/301/441 (S US Hwy 441). (1997-1)

(23) SE 110th Street, from S Hwy 475 (S Magnolia Avenue) east to S Hwy 27/301/441 (S US Hwy 441). (1997-1)

(24) SW 4th Avenue, from SW 32nd Street (Lopez Road/SW 7th Avenue/SW 4th Avenue connection) south to SW 35th Street. (1997-1)

(25) SW 7th Avenue, from SW 17th Place south to SW 32nd Street / SW 42nd Street (Lopez Road). (1997-1)

(26) SW 7th Avenue Road (Old Lemon Avenue), from SW 35th Street south to SW 63rd Street Road. (1997-1)

(27) SW 9th Street Road, from SW 95th Avenue Road east to SW 85th Avenue; (2001-19)

(28) SW 16th Avenue, from SW 80th Street south to S Hwy 312 (SW 87th Place). (1997-1)

(29) SW 19th Avenue Road, from SW 66th Street south to SW 80th Street. (1997-1)

(30) SW 21st Court, from SW 87th Place south to SW 90th Street. (1997-1)

(31) SW 31st Street, from SW 95th Avenue Road east to SW 97th Court. (1997-1)

(32) SW/SE 32nd Street (Lopez Road/SW 7th Avenue/SW 4th Avenue connection), from SW 7th Avenue east to S Hwy 475 (SE 3rd Avenue). (1997-1 and 2000-12)

(33) SW 34th Place, from SW 97th Court east to SW 90th Avenue. (2001-19)

(34) SW/SE 35th Street (Old Lemon Avenue), from SW 7th Avenue Road east to S Hwy 475 (SE 3rd Avenue). (1997-1)

(35) SW 42nd Street (Lopez Road/SW Hwy 475C), from S Hwy 475A east to SW 7th Avenue. (1997-1)

(36) SW/SE 52nd Street (Buffington Road), from SW 7th Avenue Road (Old Lemon Avenue) east to S Hwy 27/301/441 (S US Hwy 441). (1997-1)

(37) SW 63rd Street Road, from SW 19th Avenue Road east to S Hwy 475 (S Magnolia Avenue). (1997-1)

(38) SW 66th Street (Williams Road), from SW Hwy 200 (SW College Road) east to SW 19th Avenue Road (boundary of Hijuelas Grant). (1997-1)

(39) SW 73rd Street Road, from SW 80th Street north then east to S Hwy 475 (S Magnolia Avenue). (1997-1)

(40) SW/SE 80th Street (SE Hwy 328), including the trail connection, from S Hwy 475A (SW 27th Avenue) east to SE 41st Court. (1997-1)

(41) SW 85th Avenue/9th Street Road from W Hwy 40 to SW 95th Avenue Road. (2001-19)

(42) SW 97th Court, from SW 31st Street south to SW 34th Place. (1997-1)

(43) SW 95th Avenue Road, from SW 110th Avenue east to SW 9th Street Road; (2001-19)

(44) SW 110th Avenue, from W Hwy 40 south to SW 95th Avenue Road; (2001-19)

C. Rustic road/route: None at this time.

Sec. 5.6.4 Design, development, and maintenance standards for designated facilities identified in Section 5.6.3.

A. Roadway Vegetation Maintenance.

(1) The County shall cease all roadway vegetation maintenance, with the exception of mowing or removal of invasive vegetation, unless such maintenance is absolutely necessary to protect the health and safety of the public.

(2) When roadway vegetation maintenance is necessary to protect the health and safety of the public, the County shall use measures which conserve, to the maximum extent feasible, the characteristics of the rural landscapes which this Division seeks to protect.

(3) Utility installation and maintenance shall be accomplished with the minimal disturbance to the roadway vegetation.

B. Expansion of County Roads.

The County shall not increase the number of through travel lanes on any designated scenic roads. Necessary safety improvements, such as turn lanes, intersection improvements, signalization, flood abatement, etc. shall be permitted when deemed necessary by the Office of the County Engineer, provided that the improvements do not result in an increase in the number of through travel lanes on any designated scenic road.

C. Curb Cuts.

All new curb cuts shall be made without removing trees in the road right-of-way or damaging the root system of trees growing at the edge of the road right-of-way, unless the property owner has no other method to access the road.

Sec. 5.6.5 Authorized improvement exemption.

A. An improvement exemption to allow modification not allowed by Section 5.6.4 to a designated facility listed in Section 5.6.3 may be authorized by resolution by the Board consistent with Section 5.6.6.

B. The Growth Services Department shall maintain a list of all Board authorized improvement exemptions including, at a minimum, the following for the improvement exemption: approval date, resolution number, and a description of the improvement, its approval conditions (if any), and its current status.

Sec. 5.6.6 Scenic road designation amendment and improvement exemption process.

A. Applicability.

(1) Changes to the list of designated facilities in Section 5.6.3 shall be initiated by the filing of a Scenic Roads Amendment Application (SRAA) as provided in Article 2.

(2) Obtaining an improvement exemption for a designated facility listed in Section 5.6.3 shall be initiated by the filing of a Scenic Roads Amendment Application (SRAA) as provided in Article 2 and this Section, and, if approved, be authorized by resolution.

(3) Changes to the other components of this Division shall be initiated by the filing of a Land Development Code Amendment Application as provided in Article 2.

B. Growth Services Department Staff Recommendation.

(1) The Department shall review each complete SRAA and prepare a written staff report listing the Department's analysis and recommendation regarding the SRAA. The completed staff report shall be made available to the applicant and public prior to the public hearing(s) regarding the SRAA, as provided in Section 5.6.6.D.

(2) In the event the Department does not prepare a written staff report by the date the Land Development Review Commission (LDRC) has set to officially act on the SRAA, the Department

shall be deemed to have recommended approval of the SRAA; however the LDRC shall not be required to make a recommendation on any such SRAA as provided in Section 5.6.6.D(1)(c).

(3) In the event the Department does not prepare a written staff report by the date the Board has set to officially act on the SRAA, the Department shall be deemed to have recommended approval of the SRAA. The Board shall not be required to act in the affirmative in regards to the SRAA due to the lack of a written staff report and recommendation by the Department as provided in Sections 5.6.6.D(2)(c).

C. Public Notices for all SRAAs.

(1) Advertisement and due public notice of required public hearings shall be provided according to FS 125.66 using a general legal notice at a minimum; in lieu of providing a general legal notice, a display advertisement may be used at the election of the Growth Services Director.

(2) Posting of Public Notice

(a) Public notice signage shall be posted along the designated facility which is the subject of the SRAA to identify the applicable location and extent of the SRAA. The intent of the signage is to identify the "limits" of the SRAA to the travelling public; wherein a minimum of two signs shall be provided to functionally mark a "beginning" and "end"; the Growth Services Director shall determine the final number of signs to be provided and the placement of the signs.

(b) The public notice sign(s) shall provide the particulars of the SRAA (e.g., add/delete designated facility or improvement exemption) and provide the date, time, and place of the public hearing(s).

(c) The placement and posting of the public notice sign(s) shall be deemed to satisfy compliance with this provision, and in the event the notice is not maintained once posted, this provision will be deemed satisfied.

(3) The applicant may be required, as determined by the Board, to fund the costs necessary to comply with Section 5.6.6.C.

D. Public hearings.

(1) Land Development Regulation Commission (LDRC) Consideration

(a) The LDRC shall meet as needed and shall review a SRAA in a duly noticed public hearing and make recommendations to the Board regarding a SRAA.

(b) The LDRC may conduct a workshop to discuss the SRAA prior to the public hearing subject to the workshop notice requirements established by the Board. Any workshop discussion by the LDRC shall not constitute a determination regarding the SRAA, nor shall it be considered to serve as or set precedent for the public hearing consideration.

(c) In the public hearing for the SRAA, the LDRC shall review the Growth Services Department staff report, receive input from the applicant as applicable, receive public input regarding the SRAA by conducting the public hearing, and consider the SRAA in regards to the following findings:

1. If approving the SRAA is consistent with the intent and purpose of the Scenic Roads Area/Scenic Roads Program,
2. If approving the SRAA is consistent with the Scenic Roads Master Plan,
3. If approving the SRAA will not adversely affect the public interest.

(d) LDRC Action

1. The LDRC shall act on one of the following motions effecting a written recommendation for the SRAA in regard to Items (c) 1-3, as applicable, as follows:

a. A recommendation for approval, which may be accompanied by reasons for the recommendation of approval.

b. A recommendation for denial, which shall be accompanied by reasons for the recommendation of denial.

2. In the event the applicant, for any reason, does not appear before the LDRC at the time the SRAA is scheduled for consideration and action, the LDRC may proceed with consideration and action regarding the SRAA. It is the applicant's responsibility and obligation to ensure representation regarding the SRAA is provided before the LDRC.

3. In the event no member of the public participates in the public comment portion of the public hearing, the LDRC may proceed with consideration and action regarding the SRAA, and the LDRC is not obligated to determine the lack of participation is a form of support or disfavor in regard to the SRAA.

4. In the event the LDRC action results in a tie vote, the LDRC may deem its consideration of the SRAA complete and the SRAA shall proceed to its subsequent consideration without a formal recommendation.

5. The LDRC action and its recommendation are not classified as a final action or the equivalent of a final development order. An applicant may request reconsideration of a SRAA by the LDRC; however, the LDRC action and recommendation is functionally final and the consideration of any functional appeal is the responsibility of the Board as provided for in Section 5.6.6.D(2).

(2) Board of County Commissioners Consideration

(a) The Board shall hold a public hearing to consider each SRAA in a duly noticed public hearing.

(b) The Board may conduct a workshop to discuss the SRAA prior to the public hearing subject to the workshop notice requirement(s) established by the Board. Any workshop discussion by the Board shall not constitute a determination regarding the SRAA, nor shall it be considered to serve as or set precedent for the public hearing consideration.

(c) In the public hearing for the SRAA, the Board shall review the Growth Services Department staff report, review the findings and recommendation of the LDRC, receive input provided by the applicant as applicable, receive public input regarding the SRAA, and consider the SRAA in regards to the following findings:

1. If approving the SRAA is consistent with the intent and purpose of the Scenic Roads Area/Scenic Roads Program,

2. If approving the SRAA is consistent with the Scenic Roads Master Plan,

3. If approving the SRAA will not adversely affect the public interest.

(d) Board Action

1. The Board shall act on one of the following motions effecting a determination for the SRAA as follows:

a. Motion to approve the SRAA as presented or in a modified form, which may be accompanied by reasons for the adoption, or

b. Motion to deny the SRAA with said motion provided in a written form which shall be accompanied by reasons for the denial action.

2. In the event the applicant, for any reason, does not appear before the Board at the time the SRAA undergoes consideration and action, the Board may proceed with consideration and action regarding the SRAA. It is the applicant's responsibility and obligation to ensure representation regarding the SRAA is provided before the Board.

3. In the event no member of the public participates in the public comment portion of the public hearing, the Board may proceed with consideration and action regarding the SRAA, and the Board is not obligated to determine the lack of participation is a form of

support or disfavor in regard to the SRAA.

4. Alternatives if a vote of the Board results in a tie vote:
   1. The tie vote shall serve as a denial regarding the SRAA as the motion did not achieve a majority of the voting members. For the purposes of a denial resulting from a tie vote, the Board shall provide written supportive findings of the effective denial as provided in Items (c) 1-3, or
   2. In lieu of accepting the tie vote as a denial, the Board may act to continue the SRAA consideration to a subsequent public hearing, including providing a date, time, and place as designated by the Board; however the Board is under no obligation to continue the SRAA consideration.
5. Approval.
   a. Action to add/delete a road segment in Section 5.6.3 shall be by adopted ordinance to be reflected in Section 5.6.3.
   b. Action to authorize an improvement exemption on a road segment in Section 5.6.3, shall be by resolution as provided by in Section 5.6.5.
   c. Approval of a SRAA by the Board shall serve as a final action in regards to the SRAA; however the approval shall not be classified as a final or local development order.
6. Denial and appeal.
   a. An appeal of a Board vote to approve or deny the approval of a SRAA shall be conducted consistent with the appeal provisions of a Land Development Regulation Amendment Application provided in Section #.#.#.
   b. Alternative Dispute Resolution as set forth in Chapter 718.1255, FS? In the event an applicant files for Alternative Dispute Resolution for an amendment(s), the appeal process initiated by Item a shall be held in abeyance as provided in Chapters 120 and 718, FS.
   c. When the Board has denied a SRAA, no applicant shall submit a SRAA for the same or any portion of the denied SRAA for a period of 12 months from the date of denial unless the roadway has become incorporated/annexed into a municipality.

Division 7 Wellhead/Wellfield Protection Area (WHPA)

Sec. 5.7.1 Purpose and intent.

Groundwater is Marion County's unique and limited local water source necessary to support Marion County's population and environment. The Wellhead/Wellfield Protection Area's purpose is to safeguard public health, safety, natural resources, and property by protecting the County's groundwater resources and manage land use and development consistent with Marion County's Comprehensive Plan Natural Groundwater Aquifer Protection Element.

Sec. 5.7.2 Applicability.

A. The regulations set forth herein shall apply to all areas surrounding each potable water well and/or wellfield for a Community Water System (CWS) established under the provisions of FAC 62-521.200(1), as amended.

B. Exempt activities. The following are exempt from the provisions of this Division:

(1) The transportation of any hazardous material or substance through a WHPA, provided the transporting vehicle is in transit.

(2) Agricultural uses, including mosquito control or abatement, which are conducted in conformance with FS Chapter 487, The Florida Pesticide Law, as amended.

(3) The use of a hazardous material or substance solely as fuel or fuel additive in a vehicle or tractor fuel tank or as a lubricant in a vehicle or tractor.

(4) Activities associated with fire, police, emergency medical services, emergency management center facilities, and public utilities, except for landfills.

(5) Retail sales establishments that store and handle hazardous materials or substances for resale in their original unopened containers.

(6) Office uses except those used for the storage, handling, or use of hazardous materials or substances as provided for in applicable FACs.

(7) Storage tanks which are constructed and operated in accordance with Florida's storage tank regulations.

(8) Geotechnical boring.

(9) Residential activities not including office space in a residential unit.

(10) Public utility and medical facility emergency generating facilities except that permanently installed fuel storage facilities exempted under the FAC shall have secondary containment.

Sec. 5.7.3 Wellhead/wellfield protection areas (WHPAs).

A. Three WHPA zones are hereby created and arranged as a series of concentric rings as provided in Table 5.5.3-1, Wellhead/Wellfield Protection Area (WHPA) Zones.

Table 5.7.3-1: Wellhead/Wellfield Protection Area (WHPA) Zones

	Community Water System (CWS) (FAC 62-521.200(1)) Wellhead/Wellfield Type	
ZONE	Serving On-site Only	Serving one or more properties under separate and/or different ownership
Primary	≤200'	≤200'
Secondary	>200' to ≤300'	>200' to ≤500'
Tertiary	n/a	>500' to ≤1,000'

At a minimum, each zone shall be measured from the well casing. If the casing location is not specifically known/indentified, the well location may be estimated using the longitude/latitude of the well and the well diameter as established by the well's WMD/DOH permitting data.

B. The applicable provisions for each protection zone shall be inclusive of any smaller zone contained within the larger zone; however, more restrictive provisions, if any, for the smaller zone shall apply within that zone.

C. The Planning and Zoning Manager, in consultation with the Utilities Director, shall be responsible for determining if a lot/parcel is located wholly or partially in a particular Wellhead/Wellfield Protection Area Zone. Any appeal of this determination shall be made to the Development Review Committee.

Sec. 5.7.4 Regulated uses.

A. Primary Zone

(1) The Primary Zone is a zone of exclusion for all uses, structures, or other impervious surfaces except as follows:

(a) Open space, parks, playgrounds, and new uses functionally related to the CWS.

(b) Playing courts, open-air shelters, and other similar recreation facilities.

(c) Parking areas for recreation areas; however no stormwater management detention and/or

retention areas for any parking areas, including their driving aisles, shall be allowed within 100' of a wellhead.

(d) A parcel or lot of record determined to be eligible for the development of one single family dwelling unit per Article 4.#.# shall be eligible for such use provided that parcel or lot was created on or before January 1, 1992; and if the residential dwelling unit requires service by an OSTDS, the location of the OSTDS shall be separated from the CWS well/wellhead/wellfield to the maximum extent practicable.

(2) Prohibited uses, structures, and other impervious surfaces existing at the time a CWS serving as the basis for the zone of exclusion is established shall be classified as non-conforming uses and/or structures in accordance with Article 4.#.#.

B. Secondary Zone

(1) Prohibited uses:

(a) Non-residential use handling, producing, or storing hazardous materials or substances;

(b) Landfill, solid waste disposal facilities, or sludge disposal sites;

(c) Effluent spray fields;

(d) Expansion of existing high-risk regulated activities and new high-risk regulated activities;

(e) Discharge to groundwater through manmade conduits, except for OSTDS having total sewage flows less than or equal to 2,000 gallons per day and stormwater treatment facilities;

(f) Feedlots or other concentrated animal waste storage and/or disposal;

(g) Mines and excavation sites;

(h) The use of drainage wells for stormwater disposal; or

(i) The use of sinkholes for stormwater disposal.

(2) Prohibited uses, structures, and other impervious surfaces existing at the time a CWS serving as the basis for the zone of exclusion is established shall be classified as non-conforming uses and/or structures in accordance with Article 4.#.#.

C. Tertiary Zone

(1) Prohibited uses:

(a) Landfills, solid waste disposal facilities, or sludge disposal sites;

(b) Effluent spray fields not meeting Class I reliability and not meeting high-level disinfection;

(c) Expansion of existing high-risk regulated activities and new high-risk regulated activities;

(d) Discharge to groundwater through manmade conduits, except for OSTDS and stormwater treatment facilities;

(e) Feedlots or other concentrated animal waste storage and/or disposal;

(f) Mines and excavation sites;

(g) The use of drainage wells for stormwater disposal; or

(h) The use of sinkholes for stormwater disposal, unless sufficient pretreatment is provided and feasible alternatives cannot be achieved.

(2) Prohibited uses, structures, and other impervious surfaces existing at the time a CWS serving as the basis for the zone of exclusion is established shall be classified as non-conforming uses and/or structures in accordance with Article 4.#.#.

Sec. 5.7.5 Stop work order.

A "Stop Work Order" shall be issued by a Code Enforcement Officer for a violation of this Division if the owner or operator is conducting an unapproved and/or prohibited use, or the owner or operator

declines to cooperate with the County in correcting or cleaning up a discharge or spill of a hazardous material or substance as defined by Federal or State law, as amended.

Article 6 Technical Standards and Requirements

Division 1 General Provisions

Sec. 6.1.1 Purpose and intent.

The purpose of this article is to provide minimum technical standards and design requirements, as well as the procedural guidelines necessary to support applications outlined in Article 2, and to safeguard the health, safety, and welfare of the general public.

Sec. 6.1.2 Applicability. This article applies to all projects except:

A. A single family residence unless otherwise indicated herein.

B. Projects which are vested from meeting the requirements of the Code by either a vesting determination or a Development Agreement.

Sec. 6.1.3 Conflicts. Where the provisions of this article are in conflict with regulations of any other article of this Code, the more restrictive provisions shall take precedence.

Sec. 6.1.4 Approval of alternative design standards. The County Engineer or designated representative may approve alternative design standards if demonstrated to be environmentally sensitive and technologically advanced, with proven capability or effectiveness, while adhering to the intent of this Code.

Sec. 6.1.5 All requirements are to be implemented in conjunction with Florida Statutes and Florida Administrative Code, which may be subject to change as modified by the State of Florida.

Division 2 Technical Standards and Requirements

Sec. 6.2.1 The following requirements apply to all supporting plans:

A. Plans shall be prepared by a professional licensed by the State of Florida. The name, street address, signature, date, license number, and seal of the responsible professional shall be shown on each plan sheet. The same shall be provided on the cover page of any supporting documents and calculations.

B. Plans shall be legible and meet typical industry standards.

C. Standardized sheet size shall be 24” x 36”. Any exceptions must be pre-authorized by the County Engineer.

D. All sheets shall indicate each sheet number and the total number of sheets. Cross references between sheets is required.

E. Provide drawing legend.

F. Provide north arrow and graphic drawing and written scale.

Sec. 6.2.2 Conceptual plans may be submitted and shall have sufficient information needed to support discussions with staff, and potential permitting, as required by Growth Services, the Building Safety Department, or the Office of the County Engineer. Additional information regarding the Conceptual Plan application may be found in Article 2.10 Conceptual Plan.

Sec. 6.2.3 Application Requirements. Table 2.9 – 1 Application Requirements provides a reference of the minimal requirements needed for:

- A comparable review, and/or

- Information that may be required to move the application efficiently through the approval process.

Requirements in this table may be cumulative to and/or dependent on other aspects of the application.

Division 3 Final Plat Notes and Certification

Sec. 6.3.1 Final Plat Requirements

A. A title block consisting of a formal title with one or more subtitles, centered at the top of each sheet of the Final Plat, as follows:

(1) The title shall be the formal name of the proposed subdivision. The name shall not duplicate the name of any other existing subdivision in the County, unless the subdivision is part of an overall development bearing that common name. This portion of the title block shall be largest print included within the title block;

(2) In compliance with § 177.081 FS, the Final Plat shall be reviewed for conformity with Ch. 177 FS and the Marion County Land Development Code. Evidence of this review and final approval shall be shown in the form of a signed stamped certification to be placed on the left hand margin of the cover sheet of the plat by the reviewing professional surveyor and mapper.

(3) The following sub-titles shall be provided, in a print subordinate to the print of the formal title, as applicable, in the following order:

(a) The master or overall development name and phase, if it was not included as part of the formal name;

(b) "*A HAMLET SUBDIVISION*" if the final plat is for a hamlet subdivision created under the provisions of Section 3.3.3.A(2);

(c) "*A PLANNED UNIT DEVELOPMENT*" if the final plat is for a project within a PUD created under the provision of Article 4;

(d) "*A REPLAT OF …*" and then listing a summary of the components for any pre-existing subdivision being replatted by the final plat;

(e) The Sections, Townships, and Ranges applicable to the final plat; and

(f) The name of the county and state;

B. A two-inch high by five-inch wide space shall be provided and reserved in the upper right-hand corner of each sheet to include only the following recording and sheet information:

(1) To be used by the Clerk of the Circuit Court for recording information:

"PLAT BOOK:_____ PAGE:_____ "

(2) The general sheet listings for the plat, completed appropriately:

"Sheet ____ of _____"

C. Information requirements:

(1) If the Final Plat exceeds one sheet, the following shall be provided on the first sheet:

(a) A location sketch on page one showing the subject site and general location of the subject site in relation to the surrounding area;

(b) An index diagram showing the entire subdivision and indexing each area shown on succeeding sheets shall be provided on the first sheet if the Final Plat exceeds one sheet. The index diagram shall include clearly labeled match lines.

(2) "Not included" parcels to be labeled "not a part of this plat";

(3) Dimensions and locations of all lots, tracts, parcels, blocks, and rights-of-way, with each lot, tract, parcel, and block individually distinguishable, located, and identified;

(4) Dimensions and locations of all known existing easements with each easement type individually distinguishable, located, and identified, including their Marion County Official Record Book and Page;

(5) Dimensions and locations of all proposed easements with each easement type individually distinguishable, located, and identified;

(6) Dimensions and locations of all existing or recorded streets intersecting or contiguous to the boundary of the plat by bearing and distances, using the street number as designated by 9-1-1 Management;

(7) Dimensions and locations of all proposed streets using the street number as designated and assigned by 9-1-1 Management;

(8) All adjacent property identified by the subdivision name, plat book and page number; if not platted, so state;

(9) County and city limit lines within or abutting the tract;

(10) The existing future land use designation and zoning classification of the subject property and adjoining properties at the time of approval by the Board. This information may be provided graphically using the location sketch, on the individual sheets best representing the subject and adjoining properties, and/or in a text form as referenced in Item (p);

(11) For projects subject to a PUD zoning consistent with Division 4, a summary of the corresponding development standards shall be provided, including one or more typical setback graphics which reflect the standards applicable to the area of the Final Plat;

(12) If any portion of the property depicted on the plat, outside of a designed and designated stormwater facility, includes the one percent (100-year) flood plain that will not be amended and removed from the FEMA FIRM prior to the recording of the plat, this flood plain shall be delineated graphically on the plat with a note detailing source reference, date, elevation, and mapping method used.

(13) The metes and bounds legal description of the site consistent with the provisions of Section 6.4.4, including a final summary sentence, appropriately completed, that states "*CONTAINING _____ACRES, MORE OR LESS,"* with the acreage provided to one one-hundredth of an acre at a minimum;

(14) The purpose/use, improvements, and maintenance responsibilities for all tracts shall be listed on the plat in a list or table form;

(15) The following statements shall be captioned as "*ADVISORY NOTICES"* and be provided in a prominent manner on the plat, as appropriate, in the following order:

(a) "The current future land use designation and zoning classification for the property described hereon is [complete accordingly] and [complete accordingly] respectively." This item may be deleted in the event the subject property's land use and zoning have been provided graphically consistent with Item (k) above;

(b) "According to the National Flood Insurance Program (NFIP) Flood Insurance Rate Map (FIRM) Community Panel #[complete accordingly], Marion County, Florida, Dated [complete accordingly], the property described hereon lies in Flood Zone [complete accordingly (X, A, AE, etc.) for all zones applicable to the property]. The flooding limits have been identified here within as currently established at the time of final plat recording. All persons with an interest in the lands described hereon should evaluate current floodplain limits as they may be amended from time to time as determined by FEMA;"

(c) When stormwater is not contained within the limits of the plat, provide the note as follows: "Stormwater runoff generated from the improvements associated with this plat are discharged into the lands described in Marion County Public Records [Official Record Book {###}, Page {###}] or [Tract {??} as depicted in Plat Book{###}, Page{###}];"

(d) As related to covenants, restrictions, or reservations:

1. *WHEN COVENANTS*, restrictions, or reservations are established by the developer they shall be indicated as follows and completed accordingly: "*COVENANTS, RESTRICTIONS, AND/OR RESERVATIONS AFFECTING THE OWNERSHIP OR USE OF THE PROPERTY SHOWN IN THIS PLAT ARE FILED IN MARION COUNTY OFFICIAL RECORD BOOK NO. _____, PAGE _____.*"
2. The following shall minimally be provided: "There may be additional restrictions that are not recorded or referenced on this plat that may be found in the Marion County Official Records;"

(e) "All lots/tracts shall use this subdivision's internal roadways for vehicle/driveway access. Direct vehicle/driveway access to _____ is prohibited." For corner lots, show the restricted areas where driveways cannot be placed.

(f) "This plat contains _##_ lots and _##_ miles of roads."

(g) If the project is part of DRI/FQD, then the following note shall be provided: "DEVELOPMENT OF THE PROPERTY AS SHOWN ON THIS [SITE PLAN/SUBDIVISION PLAT] IS SUBJECT TO THE TERMS AND CONDITIONS OF THE [PROJECT NAME DRI/FQD] DEVELOPMENT ORDER, AS MAY BE AMENDED FROM TIME TO TIME, INCLUDING PROVISIONS REGARDING THE CONCURRENCY OF PUBLIC FACILITIES."

(h) "This project has not been granted concurrency approval and/or granted and/or reserved any public facility capacities. Future rights to develop the resulting property(ies) are subject to a deferred concurrency determination, and final approval to develop the property has not been obtained. The completion of concurrency review and/or approval is deferred to a later development review stage."

(i) *"The Board of County Commissioners of Marion County, Florida, as a condition of precedent to the approval and acceptance of this plat for recording in the Public Records, does hereby notify all present and future owners of the property described hereon that the lands included in this plat are subject to special assessments as may be permitted by law to finance cost incurred in connection with the maintenance, operation, and construction of infrastructure as determined necessary in the opinion of said Board or other governing body having jurisdiction."*

(j) Acknowledgment of Contiguous Sustainable Agricultural Lands. If the subdivision plat is contiguous to sustainable agricultural land as defined by § 163.3163(3 FS), then the following shall apply:

1. The following note shall be provided on the plat:

   "ACKNOWLEDGEMENT OF CONTIGUOUS SUSTAINABLE AGRICULTURAL LAND.
   The developer, successors, and assigns, hereby acknowledge and understand the subdivision herein described and established is contiguous to sustainable agricultural land as shown on this plat.
   It is acknowledged and understood by the parties that the farm operation on the contiguous sustainable agricultural land identified herein may be conducted according to generally accepted agricultural practices as provided in the Florida Right to Farm Act, section 823.14, Florida Statutes."
2. All lands identified as qualified continuous sustainable agriculture lands shall be identified on the plat in a clear manner, similar to the identification of "unplatted" lands as required in subsection C(2) and (8).
3. Compliance with this provision shall deem the requirement for the individual property owners or permittees within this subdivision contiguous to sustainable agricultural land to be in compliance with § 163.3163 FS.

D. The Final Plat shall contain, on the first page, the following dedications executed and acknowledged

as required by law, in the forms set forth below:

(1) All dedications shall be in the following forms or as approved by the County Attorney (*ITALIC CAPS*), with the appropriate items below. When a name or entity is used within a dedication item, the exact legal name of the entity shall be provided.

(a) "DEVELOPER'S ACKNOWLEDGEMENT AND DEDICATION"

"KNOW ALL MEN BY THESE PRESENTS, THAT [EXACT CORPORATE NAME, STATE OF INCORPORATION, OR INDIVIDUAL'S NAME], FEE SIMPLE OWNER OF THE LAND DESCRIBED AND PLATTED HEREIN, AS [EXACT SUBDIVISION NAME], BEING IN MARION COUNTY, HAS CAUSED SAID LANDS TO BE SURVEYED AND PLATTED AS SHOWN HEREON AND DOES HEREBY DEDICATE AS FOLLOWS:"

(b) Streets, Rights-of-way, and Parallel Access Easements, select as appropriate:

1. For Public Streets. "[All streets and rights-of-way shown on this plat or name specifically if less than all] are hereby dedicated for the use and benefit of the public."
2. For Non-Public Streets. "[All streets and rights-of-way shown on this plat or name specifically if less than all] are hereby dedicated privately to the [entity name]. All public authorities and their personnel providing services to the subdivision are granted an easement for access. The Board of County Commissioners of Marion County, Florida, shall have no responsibility, duty, or liability whatsoever regarding such streets. Marion County is granted an easement for emergency maintenance in the event of a local, state, or federal state of emergency wherein the declaration includes this subdivision or an emergency wherein the health, safety, or welfare of the public is deemed to be at risk."
3. For Parallel Access Easements. "All parallel access easements shown on this plat are hereby dedicated for the use and benefit of the public, and maintenance of said easements is the responsibility of [entity name]."

(c) Utility Easements, select as appropriate:

1. *"[ALL UTILITY EASEMENTS SHOWN OR NOTED* or *NAME SPECIFICALLY IF LESS THAN ALL] ARE DEDICATED [PRIVATE OR TO THE PUBLIC] FOR THE CONSTRUCTION, INSTALLATION, MAINTENANCE, AND OPERATION OF UTILITIES BY ANY UTILITY PROVIDER."*
2. "[*ALL UTILITY TRACTS ORIDENTIFY EACH TRACT AS APPROPRIATE] AS SHOWN ARE DEDICATED [PRIVATE OR TO THE PUBLIC] FOR THE CONSTRUCTION AND MAINTENANCE OF SUCH FACILITIES."*

(d) Stormwater easements and facilities, select as appropriate:

1. "[All stormwater and drainage easements as shown or noted or name specifically if less than all] are dedicated [private or to the public] for the construction and maintenance of such facilities."
2. "[All stormwater management tracts oridentify each tract as appropriate] as shown are dedicated [private or to the public] for the construction and maintenance of such facilities."
3. When any stormwater easement and/or management tract is not dedicated to the public or Marion County directly, the following statement shall be added to the dedication language: *"MARION COUNTY IS GRANTED THE RIGHT TO PERFORM EMERGENCY MAINTENANCE ON THE [STORMWATER EASEMENT AND/OR MANAGEMENT TRACT, COMPLETE ACCORDINGLY] IN THE EVENT OF A LOCAL, STATE, OR FEDERAL STATE OF EMERGENCY WHEREIN THE DECLARATION INCLUDES THIS SUBDIVISION OR AN EMERGENCY WHEREIN THE HEALTH, SAFETY, OR WELFARE OF THE PUBLIC IS DEEMED TO BE AT RISK ."*

(e) Park, Recreation, Amenity areas. "Tracts [identify each tract as appropriate] are dedicated in perpetuity for the [exclusive use and enjoyment of the owners of lots in this subdivision or use and enjoyment of the public, complete accordingly] and shall be the perpetual maintenance obligation of [state exact name of entity or Marion County, Florida, complete

accordingly]."

(f) If a Conservation Easement is required the following shall be provided: "A Conservation Easement [as shown or on Tract and identify the tract, complete accordingly] is dedicated to [the Board of County Commissioners of Marion County, Florida or entity name, if not Marion County] for the purpose of preservation of [listed species, habitat, karst feature and/or native vegetation, complete accordingly]."

(2) Add the appropriate closing.

(a) If corporation:

IN WITNESS WHEREOF, the above named corporation has caused these presents to be signed by its _____ and its corporate seal to be affixed hereto by and with the authority of its board of directors this _____ day of _____, 20_____.
(FULL CORPORATE NAME), a corporation of the State of _____
By: _____
(Signature of president or vice president or chief executive above)

Type Name and Title of Officer (signature must have two (2) witnesses or be under corporate seal).

(b) If individual:

IN WITNESS WHEREOF, (I) (we), (name(s), have hereunto set (my) (our) hand(s) and seal(s) this _____ day of _____, 20_____.
WITNESSES:
_____ (signature)
(Typed name)

_____

(c) Add the acknowledgement (witnesses and notary) of those executing the dedication consistent with § 689.01 FS.

(3) Add the appropriate joinder and consent to the dedication by a mortgagee or other party of interest using one, or a combination of, the following methods:

(a) Provide the joinder and consent to the dedication by a mortgagee or other party in interest as a direct statement on the Final Plat as follows:

"[MORTGAGEE or PARTY OF INTEREST] CONSENT

The undersigned hereby certifies that it is the holder of (a) mortgage(s), lien(s), or other encumbrance(s) upon the property described hereon and does hereby join in and consent to the dedication of the land described in said dedication by the owner thereof and agrees that its mortgage(s), lien(s), or other encumbrance(s) which (is)(are) recorded in Official Record Book _____ at page(s) _____ of the public records of Marion County, Florida, shall be subordinated to the dedication shown hereon."

1. Provide the appropriate closing.

a. If corporation:

IN WITNESS WHEREOF, THE SAID CORPORATION HAS CAUSED THE PRESENTS TO BE SIGNED BY ITS _____ AND ITS CORPORATE SEAL TO BE AFFIXED HEREON BY AND WITH THE AUTHORITY OF ITS BOARD OF DIRECTOR THIS _____ DAY OF _____, 20____.

(FULL CORPORATE NAME), A CORPORATION OF THE STATE OF _____

BY (SIGNATURE OF PRESIDENT VICE PRESIDENT OR CHIEF EXECUTIVE OFFICER)

_____

(TYPED NAME AND TITLE OF OFFICER)

(AFFIX CORPORATE SEAL) or have two witnesses as listed in Item 2 below.

b. If individual:

IN WITNESS WHEREOF, (I) (WE), _____ DO HEREUNTO SET (MY) (OUR) HAND(S) AND SEAL(S) THIS _____ DAY OF _____, 20_____.
*WITNESSES (*repeat signature below as necessary for each owner).
(SIGNATURE) _____
(TYPED NAME)

c. Add the acknowledgment (witnesses and notary) of those executing the Mortgagee or party of interest consent consistent with § 689.01 FS.

2. Provide the joinder and consent as a separate instrument joining in and ratifying the plat and all dedications thereon, in accordance with Florida Statutes, Section 177.081, as follows:

a. The final plat and the separate instrument(s) shall be recorded within the Marion County Public Records concurrently and include coordinated references between the documents as provided in following Items b and c.

b. The following statement shall be placed on the final plat*: "A SEPARATE INSTRUMENT(S) SERVING AS JOINDER AND CONSENT FOR A MORTGAGEE OR OTHER PARTY OF INTEREST TO THE PLAT DEPICTED HEREON HAS BEEN SEPARATELY FILED AND RECORDED IN THE MARION COUNTY PUBLIC RECORDS OFFICIAL RECORD BOOK (ENTER NUMBER), PAGES (ENTER NUMBER) TO (ENTER NUMBER)," AS ASSIGNED BY THE CLERK OF THE COURT'S OFFICE.*

c. The separate instrument shall utilize the same general form as provided in Item (a) above and shall include the final plat's official name as listed on the final plat and include a blank entry reference for the Marion County Public Records Plat Book and Page(s) as assigned by the Clerk of the Court's Office.

E. Certifications and Approvals. The Final Plat shall contain on the first page the following certifications and approvals, all executed and acknowledged as required by law, in the forms set forth below:

(1) The Surveyors and Mappers Certification shall contain the signature, Florida registration number, and name of firm, if applicable (if submitted by a firm the signing surveyors name will also appear in a legible manner), street address, and embossed seal of the Surveyor certifying the plat and will contain the following statement:

"I CERTIFY THIS PLAT, PREPARED UNDER MY DIRECTION AND SUPERVISION, COMPLIES WITH THE REQUIREMENTS OF CHAPTER 177, FLORIDA STATUTES, MEETS THE MINIMUM TECHNICAL STANDARDS SET FORTH BY THE FLORIDA BOARD OF PROFESSIONAL SURVEYORS AND MAPPERS, AND IS IN ACCORDANCE WITH THE REQUIREMENTS OF THE MARION COUNTY LAND DEVELOPMENT CODE, AND THAT THIS PLAT DOES NOT ADVERSELY AFFECT THE LEGAL ACCESS OF ADJACENT PARCELS."

(2) Development Review Committee certification shall appear in the following form:

APPROVAL BY COUNTY OFFICIALS – DEVELOPMENT REVIEW COMMITTEE:
BY: _____ *County Engineering*
BY: _____ *County Fire Services*
BY: _____ *County Planning*
BY: _____ *County Surveyor*
BY: _____ *County Utilities*
BY: _____ *County Zoning*

(3) Board of County Commissioners and Clerk of Circuit Court certification shall include the following:

"CERTIFICATE OF APPROVAL BY BOARD OF COUNTY COMMISSIONERS
THIS IS TO CERTIFY, THAT ON _____/_____/_____ THE FOREGOING PLAT WAS APPROVED BY THE BOARD OF COUNTY COMMISSIONERS OF MARION COUNTY, FLORIDA.

_____
[Printed Name of Chair], *CHAIR*
BOARD OF COUNTY COMMISSIONERS OF MARION COUNTY, FLORIDA
ATTEST:

_____
[Printed Name of Clerk]
CLERK OF THE CIRCUIT COURT"

(4) Clerk's certification for acceptance and recording shall include the following:

*"I, CLERK OF CIRCUIT COURT OF MARION COUNTY, FLORIDA, DO HEREBY ACCEPT THIS PLAT OF __[*list legal name of subdivision*]__ FOR RECORDING. THIS PLAT FILED FOR RECORD THIS _____ DAY OF _____, _____, AT ___:___ AM/PM AND RECORDED ON PAGE _____ OF PLAT BOOK _____ IN THE OFFICE OF THE CLERK OF CIRCUIT COURT OF MARION COUNTY, FLORIDA*
*BY:*_____
[Printed Name of Clerk]
CLERK OF THE CIRCUIT COURT"

F. The following supporting documentation shall also be provided as appropriate:

(1) A copy of the documents demonstrating the establishment of a corresponding MSBU, CDD, or other State recognized special district responsible for the maintenance and operation of the dedicated improvements. If the MSBU option is selected by the developer, it shall be established to provide maintenance and upkeep for, at minimum, roads and drainage infrastructure. Other improvements, such as, but not limited to, street lighting or recreation, can be added to the MSBU if desired by the development.

(2) For a subdivision with privately dedicated improvements, a copy of the completed and filed documents demonstrating the private entity is properly established, operating, and eligible to be responsible for the improvements so dedicated to the association. In the case of an entity previously created and encompassing the proposed subdivision, documents demonstrating the continued establishment of the entity and its acceptance of responsibility for the improvements to be conveyed shall be required;

(3) A copy of the final protective covenants and deed restrictions, where such covenants and restrictions are required or established by the applicant, in a form to be recorded and cross-referenced to the submitted Final Plat. In the case where covenants and restrictions are previously recorded and applicable to a proposed subdivision, a copy of the effective covenants and deed restrictions shall also be provided;

(4) A certificate of title demonstrating the following:

(a) The lands as described and shown on the plat are in the name of, and apparent record title is held by, the person, persons, or organizations executing the dedication;

(b) That all taxes have been paid on said property as required by § 197.192 FS, as amended; and

(c) The official record book and page number of all mortgages, liens, or other encumbrances against the land, and the names of all persons holding an interest in such mortgage, lien or encumbrance.

The title certification shall be an opinion of a Florida attorney-at-law or the certification of an abstract or title insurance company licensed to do business in Florida. The County reserves the right to require that the title certification be brought current at the time of Final Plat approval.

(5) When required in conjunction with an Improvement or Maintenance Agreement, an itemized cost

estimate prepared and certified by the developer's engineer including the cost of construction of all required improvements in the following form:

"CERTIFICATE OF COST ESTIMATE
I, _____, A Florida registered engineer, License No._____, do hereby certify to Marion County that a cost estimate has been prepared under my responsible direction for those improvements itemized in this exhibit and that the total cost estimate for said improvements is $ _____. This estimate has been prepared, in part, to induce approval by the County of a Final Plat for the _____ Subdivision, and for the purpose of establishing proper surety amounts associated therewith.
_____(Signature)
(Name, Florida Registered Engineer
License No. _____)"
(AFFIX SEAL)

Division 4 **Survey and Mapping**

Sec. 6.4.1 Purpose and intent. This division will dictate the technical specifications to satisfy minimum survey information as required. The following shall be implemented in addition to the requirements of Florida Statutes and Florida Administrative Code, which may be subject to change as modified by the State of Florida.

Sec. 6.4.2 All plats and surveys shall adhere to the minimum plan requirements in Division 2 and the requirements listed in the following sections.

Sec. 6.4.3 Preliminary Plat Requirements.

A. Current boundary survey of the project boundary including location of all interior improvements, not more than one year old, or as approved by the County Surveyor, and meeting requirements as set forth in FAC 5J-17.52. If the Preliminary Plat is one phase of lands to be platted, a survey of the overall proposed site is acceptable.

B. Lot and tract areas and dimensions.

C. Show proposed typical building setbacks and the zoning designations.

D. The quadrant number (as assigned by Marion County 911 Management), location, and right-of-way width of all proposed and existing streets, identifying maintenance responsibilities. Include location and names of any proposed rights-of-way to be vacated.

E. Locate and identify all known easements, existing and proposed, indicating width, maintenance responsibilities, recording information, and purpose. Include any easements proposed to be vacated.

F. The location of the existing one percent (100-year) flood plain as shown on FEMA maps with zone, elevation, and vertical datum noted. A note shall appear on the Preliminary Plat stating the source and method used to obtain the flood plain line shown.

G. Show all contiguous property in accordance with § 177.091(17 FS by plat book and page number or Marion County Property Appraiser parcel identification number, if not platted. Graphically show and identify all adjacent streets, existing utilities, and individual lots.

H. A current topographic survey at one-foot intervals will be submitted with the Preliminary Plat to provide sufficient information to support preliminary design and based on an approved vertical datum by the Office of the County Engineer. Contours shall extend a minimum of 100 feet beyond the project boundary. The topographic survey will have a statement detailing source of information shown and field survey methods used to obtain and verify data.

I. Line and curve tables can be used but must be shown on the sheet to which they apply.

J. The legal description shall include a metes and bounds description, with the point of commencement and/or the point of beginning indicated, together with all bearings and distances of the boundary lines, and stating the total number of acres platted. The point of commencement or point of beginning in the description shall be tied to the nearest section corner or established identifiable, real property corner.

K. Show all existing improvements on the site. Buildings, fencing, wells, septic, utilities, driveways/roads shall be dimensioned and tied to the plat boundary. Intended use or removal of improvements shall be noted.

L. Show all apparent means of access on site to adjoining properties.

M. Show existing stormwater facilities and cross drains, and general location of the proposed stormwater facilities.

Sec. 6.4.4 Final Plat Requirements.

A. All plats shall comply with Ch. 177 FS and the requirements of this Code. They shall contain sufficient survey data to describe the boundary of the subdivision, each lot, block, tract, easement, right-of-way, and all other parcels shown on the plat.

B. The legal description shall include a metes and bounds description, with the point of commencement and/or the point of beginning indicated, together with all bearings and distances of the boundary lines, and stating the total number of acres platted. The point of commencement or point of beginning in the description shall be tied to the nearest section corner or established identifiable, real property corner.

C. The point of commencement in the description shall be accurately tied to the nearest public land or identifiable corner. If a public land survey corner is used, a Certified Corner Record must be submitted to the State of Florida and the County SurveyorCh. FS;

D. The boundary dimensions of the Final Plat shall not have a mathematical error of closure and shall be in compliance with FAC 5J-17.

E. Any plat showing or establishing the location of the ordinary high water line shall describe the methodology used for said determination;

F. The point of beginning and the point of commencement shall be clearly labeled in bold when a point of beginning or point of commencement is used in the legal description;

G. Unless installation is provided for within the surety bond, all permanent reference monuments and permanent control points as prescribed in Ch. 177 FS shall be installed prior to submission of Final Plat;

H. Clearly drawn to a scale not smaller than 1”= 100’ or as approved by the County Surveyor or designee.

I. Clearly drawn or printed with permanent black drawing ink, with lettering no smaller than one-tenth of an inch in height and stroke for letters shall be bold enough so as to be clearly legible after reduction. No shadow or broken stroke letter is permitted.

J. No grayscale, shadowing, or stippling is permitted.

K. All signatures required shall be originals on the Final Plat and shall be made in permanent dark ink acceptable to the Clerk of Circuit Court, or designee.

L. Clear margins not less than 1/2” wide on three sides and 3” wide on the left side for binding.

M. Seals. The Final Plat shall establish locations for the placement of necessary seals to accompany the dedications and certifications as required in this section. The locations shall be labeled or keyed to their respective certification and located no closer than 1/2” to, but not more than 1” from, the top, bottom, or right edge of the sheet. Locations for professional seals and Clerk of the Court shall be provided within 1/2” of the top, right, and bottom 1" of the edge of sheet.

Sec. 6.4.5 Monumentation.

A. Permanent Reference Monuments (PRMs) shall be set in accordance with § 177.091 FS and meet the following requirements:

(1) They shall be set or recovered in the field at each corner and change of direction of the boundary line;

(2) They shall be graphically shown and fully described on the plat;

(3) They shall not exceed a maximum spacing of 1,400' apart; and

(4) They shall be referenced to the State Plane Coordinate System with datum and adjustment stated.

(5) When PRMs are set as offset/witness corners, the corners shall be shown on the plat with their relation to the PRM position clearly stated. The offset/witness corners placed in the field shall be stamped "offset" or "witness."

B. State Plane coordinate values shown on the plat shall be derived from redundant measurements that meet or exceed the accuracy standards for Third Order, Class I standards as set forth by the Federal Geodetic Control Committee (FGCC).

C. A table or note will be shown containing the geodetic control station(s) name or designation of control points used to establish State Plane Coordinates.

D. Distance shown on the plat shall be shown as ground distances and noted as such.

E. Prior to the final approval of the plat for recordation, the County Surveyor or designee, shall perform a site inspection to verify PRMs placement.

F. Permanent Control Points (PCPs) shall be set in accordance with § 177.091 FS and meet the following requirements:

(1) They shall be set in the field at each block corner and change in direction along block boundary.

(2) They shall not exceed a maximum spacing of 1,000 feet apart.

(3) They shall be set in the field at centerline of right-of-way, at changes of right-of-way width, point of curvature, point of tangency, changes of centerline or right-of-way direction, and at the centerline intersection of rights-of-way.

(4) PCPs shall be graphically shown and fully described on the plat.

(5) When PCPs are set as offset/witness corners, the corners shall be shown on the plat with their relation to the PCP position clearly stated. The offset/witness corners placed in the field shall be stamped "offset" or "witness."

G. Where plat boundary corners are found to coincide with previously set monumentation, the description and stamping of the existing monumentation shall be shown on the plat.

H. All lot and tract corner monumentation shall be set in accordance with the requirements of § 177.091 FS.

I. All section lines, government lot lines and grant lines and/or corners found within the subdivision shall be shown with ties to the plat boundary.

J. Platted adjoining lands shall be identified by subdivision name, plat book and page, with the graphic depiction and labeling of lots, blocks, easements, and rights-of-way.

K. Unplatted adjoining lands shall be labeled as "unplatted" with deed book or official record book and pages shown.

L. Boundary overlaps, gaps, hiatus, or encroachments involving the plat boundary must be resolved prior to plat approval.

M. Line and curve tables can be used but must be shown on the sheet to which they apply.

N. Bearings basis shall be noted and referenced to an established, monumented line shown on the plat.

Sec. 6.4.6 Replats shall include:

Replats shall meet requirements as set forth in § 177.051(2) FS and FAC 5J-17, all provisions as described in this Code under Final Plat, Div 2 & Section ?, and the following;

A. Replats shall show the lot and block lines of the previous plat in such a manner to avoid confusion, including monumentation that may have been previously set. As an exception, the platting Surveyor and Mapper can state on the Replat that the original monumentation was not previously set.

B. Any rights-of-way and/or easements to be vacated by the Replat or other process must be clearly shown on the Replat with reference to the approval date of the resolution by the Board and Marion County Official Record Book and Page that the action is recorded, as applicable.

C. Any discrepancies between the boundary of a Replat and the previous plat must be clearly noted. Original dimensions shall be noted with corrected information on both the plat drawing and legal description.

Sec. 6.4.7 Construction Plans.

Survey information to support construction plans, including but not limited to Mass Grading, Improvement, or Major Site plans, shall meet requirements as set forth in FAC 5J-17.51 in addition to the following:

A. Vertical control shall be provided and meet the following:

(1) All surveys submitted for the purpose of construction shall show a minimum of two bench marks per site. For linear construction, bench marks shall be set at 1,000' intervals. For large acreage sites, additional bench marks may be required by the County Surveyor, not to exceed a ratio of one bench mark per 20 acres.

(2) Bench mark information shall be in a current datum approved by the Office of the County Engineer.

(3) Plans shall have a statement or table detailing vertical datum and adjustment, including the origin points with name of the agency responsible for establishing the point, with the date of the field survey used to establish the vertical information shown. One copy of the vertical control field notes shall be submitted to the Office of the County Engineer for review.

(4) When using stationing, all vertical control points shall be referenced to station and offset information.

B. Horizontal control shall be provided and meet the following:

(1) All surveys submitted for the purpose of construction shall show a minimum of two intervisible horizontal control points per site. For linear construction, horizontal control points shall be set at no greater than 1,000 foot intervals and at every change of direction. For large acreage sites, horizontal control points shall include all boundary corners and additional horizontal control points as may be required by the County Surveyor not to exceed a ratio of two intervisible horizontal control points per 20 acres.

(2) Horizontal control points shall be monumented and referenced to the Florida State Plane Coordinate System based on a current datum approved by the Office of the County Engineer.

(3) Florida State Plane Coordinate values shall be derived from redundant measurements that meet or exceed Third Order, Class I accuracy standards as set forth by the Federal Geodetic Control Committee (FGCC).

(4) Plans shall have a statement or table detailing horizontal datum, adjustment, and coordinate values including the origin points with name of the agency responsible for establishing the point,

with the date of the field survey used to establish the State Plane information shown. One copy of the horizontal control notes along with reduction reports shall be submitted to the Office of the County Engineer for review.

(5) When using stationing, all control points shall be referenced to station and offset information. If multiple line stationing exists, the basis for the station and offsets shall be clearly defined.

C. Monumentation shall be protected during construction. Any monuments disturbed or destroyed during construction shall be replaced by a professional Surveyor and Mapper licensed in the State of Florida and shown as "reset" on the As-Built/Record Survey at completion of construction. Any variance from this must be pre-approved by the County Surveyor.

D. The location of the existing one percent (100-year) flood plain as shown on FEMA FIRM, with zone, elevation, and vertical datum noted. A note shall appear on the construction plans detailing source and survey field methods used to obtain and delineate the flood plain line shown.

E. Line and curve tables can be used but must be shown on the sheet to which they apply.

F. All abbreviations used shall be clearly defined in the legend.

G. All features shown as existing or proposed shall be mapped to standards as set forth in FAC 5J-17.

H. When stationing is used to define features on a plan, all property corners and any control points found within the right-of-way or project site shall be referenced to this stationing (these points include but are not limited to: point of intersection, point of curvature, point of tangency, and vertical and horizontal control). Section and quarter section corners found within 1,320 feet of the limits of the project shall also be referenced. On plans where multiple stationing lines are shown, a note shall appear within the general notes indicating the line controlling the referenced information. The reference information will appear on the sheet where it is graphically shown and may be displayed in a table. Information shown shall contain, at a minimum, the station, offset (left or right), State Plane Coordinate, elevation (if applicable), and a detailed description of the point.

Sec. 6.4.8 As-Built/Record Survey Requirements. As-Built/Record Survey shall be submitted to the Office of the County Engineer as a record of completed construction. Information shown on this survey shall be an actual record of the horizontal and vertical location of features as constructed and shall be archived with the Office of the County Engineer. As-Built/Record Survey shall meet requirements as set forth in FAC 5J-17.52(1). The survey shall be signed, sealed, and dated by a Professional Surveyor and Mapper licensed in the State of Florida with the dates of field survey shown.

A. One copy of the survey field notes shall be provided and shall detail survey methods used.

B. Any and all field changes during construction shall be clearly noted and shown on the As-Built/Record Survey.

C. All force main sewer, water main and reclaimed water lines shall be located at 500 foot intervals and at any change of direction. This information shall contain at a minimum, station, offset, and elevation (indicating top or invert).

D. Information shown on the as-built/record survey shall be sufficient to compare the plans to constructed conditions.

E. All section and quarter section corners found within 1,320 feet of the project limits shall be referenced to the State Plane Coordinate system. When stationing is used on the plans, the reference shall include station and offset to the corner. On plans where multiple stationing lines are shown, a note shall appear indicating the line controlling the referenced information. The reference information will appear on the sheet where it is graphically shown and may be displayed in a table.

F. Monumentation. All monumentation shall meet standards as set forth in this Code and the State of Florida:

(1) Property corners, vertical and horizontal control points, PRMs, and PCPs disturbed or destroyed during construction shall be replaced by a Professional Surveyor and Mapper and shown as "reset" on the As-Built/Record Survey.

(2) Section corners disturbed or destroyed during construction shall be replaced by a Professional Surveyor and Mapper and shown as "reset" on the As-Built/Record Survey. A new copy of the Certified Corner Record for each reset corner shall be submitted to the State of Florida and a copy provided to the Office of the County Engineer.

(3) Any monumentation shown on the construction plans as "to be set" or "proposed" shall be set and shown on the As-Built/Record Survey as "set." All corners and points found, set, or reset shall be shown on the As-Built/Record Survey in accordance with the requirements of the State of Florida.

(4) When it is not possible to set or reset a corner due to an obstruction, a reference or witness corner shall be set and described on the As-Built/Record Survey. Offset/witness corners placed in the field shall be stamped "offset" or "witness."

Division 5 Environmental Assessment for Listed Species (EALS)

Sec. 6.5.1 Purpose and Intent.

The Environmental Assessment for Listed Species is a supporting document for various applications, wherein submittal of the EALS accompanies or precedes the submission of the application. Marion County features a variety of habitat types which may include species identified and listed as endangered, threatened, or of special concern by the US Fish and Wildlife Service and Florida Fish and Wildlife Conservation Commission. Additionally, Marion County includes significant natural areas which are relatively undisturbed and include flora or fauna that reflect the conditions of the area at the time colonial settlement occurred in Florida and Marion County as identified by the Florida Department of Environmental Protection and the Florida Natural Areas Inventory. The identification and preservation of these habitats, species, and areas is critical to balance development and quality of life in Marion County.

Sec. 6.5.2 Applicability.

All developments which meet any of the following criteria shall prepare an EALS:

A. Projects which contain land identified as habitat for plant and animal species listed as threatened, endangered, or species of special concern by the USFWS and the FWC.

B. Proposed land clearing or development projects located on all or part of a parcel or contiguous parcels of land containing more than 40 acres under common ownership.

C. Projects involving 20 dwelling units or more.

D. Parcels involving non-residential uses.

E. Parcels within the Environmentally Sensitive Overlay Zone (ESOZ) that have frontage on water or wetlands.

F. Projects located within the Urban Growth Boundary, or have an Urban land use, Development of Regional Impact, Florida Quality Development, or Specialized Commerce District land use designation by Marion County Comprehensive Plan Future Land Use Map Series Map 1, *Marion County 2035 Future Land Use Map,* which are also located within an area identified as a Qualifying Natural Area/Community by the Florida Natural Areas Inventory available at www.fnai.org.

Sec. 6.5.3 Exemptions.

A. Bona fide agricultural activities as evidenced by an agricultural property tax exemption applicable to the development property as established by the Marion County Property Appraiser Office consistent with the provisions of § 193.461 FS.

B. Lands involving silvicultural activities which are part of and/or subject to a resource management plan approved by the USDA, USFS, DEP, DOF, or the applicable water management district.

C. The applicant may submit an EALS Exemption Request (EALS-ER) for land which meets the following requirements:

(1) No listed species have been documented within the proposed project area within the last two years;

(2) No portion of the project area is within the known or suspected range of any listed species; and

(3) The project area by itself, or in connection with other adjacent lands, does not meet the minimum habitat needs for a viable population of listed species.

(4) The applicant or property owner submitting an EALS-ER certifies that the proposed development of the project area is in accordance with the requirements listed above.

D. The County shall give the review agencies listed in Section 6.4.4.A the opportunity to comment on the EALS-ER and the reliability of the information provided consistent with Section 6.4.2.B(3).

Sec. 6.5.4 Submittal requirements.

A. An EALS/EALS-ER shall be submitted to the Office of the County Engineer concurrent with a corresponding development review application as provided in Article 2. In the event an EALS/EALS-ER is submitted prior to a development review application, the EALS shall be submitted directly to Zoning.

B. The appropriate number of copies of the EALS and supporting documentation shall be submitted to the Office of the County Engineer.

C. A fee in the amount established by resolution of the Board of County Commissioners shall accompany the application. The fee schedule is available at the Office of the County Engineer.

D. Provide a narrative of the project's site data including the following:

(1) Name of the property owner(s),

(2) Name of the project applicant, if different from the property owner,

(3) Title of the corresponding project for which the EALS has been submitted,

(4) Current Marion County Property Appraiser Office parcel identification number(s),

(5) Acreage of the proposed project area, and

(6) Acreage of the gross lands held under common ownership including and/or adjoining the project area.

E. Provide the results and findings of a field assessment including the following:

(1) Date(s) and time(s) of the field assessment,

(2) Name of the individual(s) and organization(s) conducting the field assessment with their qualifications,

(3) A statement of the methodology used to conduct the investigation of the site,

(4) A summary of the published information used to determine the probability of occurrence of listed species on the proposed development or land clearing site, including identifying the agency or organization providing the data. The use of data, as made available by the reviewing agencies, is encouraged. A copy of cited materials, upon request, may be required to support and evaluate the EALS.

(5) A map of land use and land cover classifications on the site, and directly abutting the site, using the *Land Use, Cover and Forms Classification System: A Technical Manual, State of Florida Department of Transportation (FLUCCS), January 1999*, as amended.

(6) A general map or map series that identifies the following:

(a) The project area limits,

(b) The adjoining lands under common ownership, if any,

(c) The location of current on-site improvements,

(d) The location of transects of the interior and perimeter of the site,

(e) The location of the habitat types identified by the field assessment, and

(f) The approximate placement and location of adjacent off-site wildlife and plant communities in relation to the site.

The map(s) may be provided as an overlay on the most recent color aerial photograph which shows the project site. However, the aerial must be at a resolution and scale sufficient to identify the location of current on-site improvements in relation to other data provided in the EALS, and ensure that the information required can be readily identified on the map and verified in the field.

(7) An inventory of the wildlife and plant communities as found on the site and observed on adjacent property surrounding the site including:

(a) An inventory of the listed species populations within the proposed development site,

(b) Size and distribution of native habitat and native vegetation types as specified in Table 6.5-1: Marion County Upland Plant Communities,

(c) Character and type of species, such as native or invasive, endangered and threatened, and species of special concern.

F. Provide the feasibility and viability of on-site protection and management of native habitats and listed species.

G. Provide the location of the site in relation to any existing or proposed conservation areas and wildlife corridors within the project area and the feasibility of maintaining the corridor or conservation area post-development.

H. In the event that on-site protection is shown to be ineffective, evaluate other mitigation options, such as relocation of the listed species to an approved location.

Table 6.5-1: Marion County Upland Plant Communities

Type	Dominant Plant Species
Sand Pine	sand pine overstory, myrtle oak, Chapman's oak, sand-live oak understory
Sandhill	longleaf pine overstory, turkey oak understory, wiregrass, partridge pea, queen's delight ground cover
Xeric Oak Scrub/Xeric Hammock	myrtle oak, Chapman's oak, sand-live oak, rosemary, saw palmetto
Pinelands	pine, slash pine loblolly pine, pond pine overstory, palmetto, gallberry, wax myrtle understory, including planted pine plantations
Mixed Hardwood/Pine Forest	pine, slash pine live oak, laurel oak, water oak sweetgum overstory, wax myrtle, cabbage palm understory
Hardwood Hammock and Forest	oak, laurel oak, sweetgum, magnolia, basket oak, pignut hickory overstory, cabbage palm, wax myrtle understory

Source: *Florida Fish and Wildlife Conservation Commission, LANDSAT Habitat Mapping, 2003*

Sec. 6.5.5 Review Procedures.

A. Copies of the EALS/EALS-ER shall be forwarded within five working days after receipt to the following review agencies: Florida Fish and Wildlife Conservation Commission, US Fish and Wildlife Service, US Forest Service, and Florida Department of Agriculture and Consumer Services Division of Forestry.

B. The review agencies shall have an opportunity to review and comment on reliability and accuracy of the information provided, and shall provide their respective comments on the EALS/EALS-ER within 30 working days of receiving the information.

Sec. 6.5.6 Completion and close out.

A. If no comments are received from staff and/or review agencies, the EALS/EALS-ER shall be considered complete.

B. If comments are received from staff and/or review agencies, the comments shall be forwarded to the applicant within five working days and the applicant shall be scheduled to appear before the Development Review Committee for resolution.

C. An approved EALS/EALS-ER shall be valid for two years.

Division 6 Habitat Protection

Sec. 6.6.1 Purpose and Intent.

The purpose of this division is to preserve and protect listed species, their supporting habitats, open bodies of water, wetlands, and other natural areas including unique and historic landscapes. Habitat protection is critical to promote development that enhances the quality of life in Marion County.

Sec. 6.6.2 Open Water.

A. Open water classified as State of Florida sovereign submerged lands, pursuant to Ch 253 FS and FAC Ch 18-21.003, shall not be eligible for use or development except as authorized by the State of Florida. Nor shall such open water be used in the calculation of gross density development potential or be eligible to be counted towards natural or improved open space requirements.

B. Open water privately owned in common with adjoining wetland or upland areas cannot be used in the calculation of gross density development potential or be eligible to be counted towards natural open space requirements. Said open water may be counted towards improved open space requirements when included and incorporated into a project.

C. The following densities shall apply to any upland area contiguous to a lake, river, or other water body with an Urban Residential land use designation:

(1) Less than or equal to one dwelling unit per acre, if wastewater service is provided by conventional septic systems.

(2) Less than or equal to two dwelling units per acre, if wastewater service is provided by a performance based treatment system or by central sewer system which is not operating consistent with SPZ requirements.

(3) Per the underlying land use designation, if wastewater service is provided by central sewer system operating consistent with SPZ requirements.

Sec. 6.6.3 Wetlands.

A. Development on sites which contain wetlands not included within the boundaries of an ESOZ shall meet the following requirements:

(1) All development shall be clustered on the upland portion of the site if sufficient upland area exists. The maximum density of respective land use designation applicable to the wetland areas

may be transferred to and clustered on the upland area. All other requirements of this Code shall be met for the upland development.

(2) Where there are insufficient uplands to allow a clustered development, development shall occur on the upland and may include portions of adjacent wetland areas. However, the following densities shall apply to those portions of projects which are in wetlands:

(a) One dwelling unit per 10 acres in Rural Lands and development shall be located or clustered outside the wetlands.

(b) One dwelling unit per five acres in an Urban Residential land use designation.

(c) Where elimination of all or a portion of a wetland is proposed through off-site mitigation conservation efforts, the maximum density of the respective land use designation applicable to the mitigated wetland area shall be accredited as follows:

1. For mitigation conservation efforts within Marion County, the full maximum density of the on-site mitigated wetlands' potential density under the land use designation shall be available.

2. For mitigation conservation efforts outside Marion County, 50 percent of the maximum density of the on-site mitigated wetlands' potential density under the land use designation shall be available.

B. Development in wetlands within the boundary of an ESOZ shall meet the wetland development and density requirements of the ESOZ.

Sec. 6.6.4 Listed Species.

A. When a proposed development or land clearing site is found to include listed species, the application shall identify species and habitat protection as on-site or off-site. The selected option shall be a condition of approval and shall be completed at time of final inspection.

B. For on-site protection, a habitat management plan shall be provided as an appendix to the EALS or submitted as a separate document, and shall include the following information:

(1) The number and types of listed species present, or presumed to be present;

(2) The size, type, quality, and location of habitat in relation to the overall site;

(3) The life cycle needs supplied by the habitat, e.g., nesting, roosting, breeding, foraging;

(4) The location of the site and habitat in relation to existing or proposed wildlife corridors, designated conservation areas, lands with conservation easements, or Natural Reservation;

(5) The practices necessary to protect the species from the impacts of development or land clearing, including at a minimum, the following:

(a) Access management and control of the habitat;

(b) Practices to manage the habitat to maintain a viable, thriving and diverse population;

(c) Practices to provide connectivity to surrounding similar habitats;

(d) Practices to discourage and/or prevent the establishment of and, when suitable, the removal of exotic or nuisance species as listed by the UF/IFAS Assessment of Non-native Plants, "Prohibited" or "Invasive – Not Recommended" tables, as updated; and

(6) The proposed conservation easement, along with its accompanying certified sketch of description of the area/community to be protected, to be filed in the Marion County Public Records.

C. Off-site mitigation.

If off-site mitigation is the preferred strategy, a minimum of one-for-one replacement value of habitat shall be required for monetary contributions or land donations. Subject to approval by the appropriate regulating agency, the following off-site mitigation options are listed below in order of

preference. It must be clearly demonstrated that the preferred option is not available before moving to the next option:

(1) Provide a monetary contribution to the Marion County Parks and Recreation Department for the acquisition of environmentally sensitive lands within Marion County. Monetary contributions for land acquisition pursuant to this section shall be applied to lands that are known to contain viable populations of listed species or habitat similar in type and quality to that on the site proposed for development or clearing as determined by the Parks and Recreation Department, which shall consult with the appropriate jurisdictional agency when necessary;

(2) Provide species relocation to similar habitat on protected lands subject to approval by the jurisdictional agency responsible for those lands (e.g., USFS, DOF, DEP, WMD, etc.), and the agency having jurisdiction over the species to be relocated (e.g., FWC, USFWS, etc.); or

(3) Acquire and donate land within Marion County that is within or contiguous to the Federal, State/Regional, and/or County lands, or other Natural Reservation lands to the appropriate managing agency. Lands donated under this option must be of equivalent acreage and contain listed species habitat of the same type and value as that on the proposed development site. However, the review agency having jurisdiction over the species for which mitigation is being provided may choose to set an alternative type and value. A Conservation Easement shall also be conveyed to Marion County to maintain and ensure Marion County's interest in the protection and preservation of the species/habitat.

Sec. 6.6.5 Native Habitat Vegetation.

A. When a proposed development or land clearing site is found to include Qualifying Natural Areas/Communities, available at www.fnai.org, and has an Urban Area land use, Development of Regional Impact, Florida Quality Development, or Specialized Commerce District land use designation by Marion County Comprehensive Plan Future Land Use Map Series Map 1, *Marion County 2035 Future Land Use Map,* the Qualifying Natural Area/Community shall be protected in a manner which protects, conserves, and enhances the resource.

B. The development application shall identify the area/community habitat protection as on-site or off-site. The selected option shall be a condition of approval and shall be completed at time of final inspection.

C. When more than one Qualifying Natural Area/Community is identified on site, the extent of protection or mitigation shall not be required to exceed 50 percent of the combined acreage for all natural communities.

D. For on-site protection, a habitat management plan shall be provided as an appendix to the EALS or submitted as a separate document. The plan shall be prepared consistent with FNAI guidelines and shall include the following information:

(1) The size, type, quality, and location of each area/community found on-site in relation to the overall site;

(2) The life cycle needs of each area/community;

(3) The frequency and extent of each area/community in Marion County and the State of Florida;

(4) The importance of each area/community as an individual area/community and as part of the Marion County and State-wide inventory, to demonstrate and provide a "priority" of areas/communities for preservation or mitigation when multiple acres/communities are found on-site;

(5) The location of each area/community on the site and in relation to existing or proposed wildlife corridors, designated conservation area, lands with Conservation Easements, or lands with a Natural Reservation land use designations;

(6) The environmental feasibility and economic impact of on-site protection;

(7) The potential use and impact of clustering, transfer of development rights to other portions of the site, or similar techniques to promote preservation of the area/community;

(8) The opportunity to include and integrate the area/community into the development project such as serving as land use buffering or Groundwater Recharge Protection Areas and/or Marion-Friendly Landscape Areas maintained native landscape areas;

(9) The practices necessary to protect the selected area/community from the impacts of development or land clearing, including at a minimum, the following:

(a) Access management and control of the area/community;

(b) Practices to manage the habitat to maintain a viable and thriving area/community, and maintain and continue the diversity of the area/community on-site;

(c) Practices to provide connectivity to adjoining and/or surrounding areas/communities to maintain a viable and thriving presence, and maintain and continue the diversity of the area/community;

(d) Practices to discourage and/or prevent the establishment of and, when suitable, the removal of exotic or nuisance species as listed by the UF/IFAS Assessment of Non-native Plants, "Prohibited" or "Invasive – Not Recommended" tables, as updated.

(10) The proposed Conservation Easement, along with its accompanying certified sketch of description of the area/community to be protected, to be filed in the Marion County Public Records.

E. For off-site mitigation, the mitigation methods listed in Section 6.6.4.C shall be similarly applied for the preservation of similar area/community habitat protection.

F. The method(s) of area/community protection, on-site or off-site, shall be reviewed and approved by the DRC as part of the development application review process. The DRC may consult with reviewing agencies (e.g., USFWS, FWD, DEP, USDF, etc.) and/or request and obtain a recommendation regarding the proposed protection or mitigation action.

Sec. 6.6.6 Open Space.

A. The provision of Natural Open Space shall comply with the following design standards:

(1) The preservation of environmentally sensitive lands and locally significant resources shall be given priority when determining the location of natural open space.

(2) Natural open space shall be arranged in a contiguous manner which supports the preservation and connectivity of the space, with particular attention to providing connectivity to wildlife, agricultural, and/or passive recreational uses, as appropriate for the characteristics of the space.

(3) Natural open space shall be arranged in a manner which supports compatibility with surrounding areas which are not part of the proposed development.

(4) The buildable area resulting from the identification of natural open space shall be compact and contiguous with the natural open space providing a buffering effect to surrounding areas.

(5) Natural open space shall be designated accordingly on a plan and conveyed for ownership and maintenance which will include identifying one or more entities responsible for ownership and maintenance of the open space, and conveyed accordingly.

(6) The Board may also require that a Developer's Agreement and/or a Conservation Easement conveyed to Marion County be established for the natural open space as part of the plan review process.

(7) The natural open space shall be maintained in a healthy state consistent with the habitat and use of the space and current applicable best management practices acceptable to Marion County, if any, consistent with characteristics of the space.

(8) Constructed stormwater facilities of any kind are prohibited within areas designated as natural open space.

(9) Structures are prohibited within natural open space; however limited minimal structural improvements may be provided for passive access and agricultural or environmental control such as boardwalks, trails, and fencing. Agricultural structures which are for bona fide agricultural purposes and not for human occupancy for residential or non-residential purposes (e.g., residence, apartment, office) may be placed within natural open space in compliance with the following design requirements:

(a) The area where the agricultural structures may be located, either on individual lots and/or on common property, as appropriate, shall be clearly designated as a separate agricultural structure buildable area on the development project's primary development plan and presented for approval by the Board.

(b) The cumulative acreage of the agricultural structure buildable areas shall not exceed 10 percent of the natural open space.

(c) The stormwater design for the development project shall provide for and reflect projected impervious surface coverage calculations for the identified agricultural structure buildable areas.

For hamlet subdivisions platted and recorded on or before [*date of new LDC adoption*], agricultural structures may be located within the natural open space but items (a) through (c) above will not apply; however, if all or part of the recorded hamlet subdivision is re-platted, the re-plat must comply with items (a) through (c) above.

(10) The location, scope, and intent of any proposed limited structural improvements to be placed within the natural open space shall be clearly indicated by the corresponding project application and its accompanying plan.

(11) Natural open space is not eligible to be awarded TDCs as provided in Division 3.4, Special Programs.

B. The provision of Improved Open Space shall comply with the following design standards:

(1) IOS may include active and passive parks and recreation facilities, public squares and plazas, and outdoor areas.

(2) Stormwater facilities and golf courses may be located within designated IOS.

(3) No more than 25 percent of stormwater facilities may be counted to satisfy area/acreage requirements for required IOS. A higher percentage may be approved by DRC, depending on the design and lay of the facility.

(4) IOS shall be designated accordingly on any development plan and shall also include identifying the ownership and maintenance entity of the IOS.

Sec. 6.6.7 Conservation Easements.

A. Conservation Easements shall be dedicated to Marion County when required under the provisions of this Code, and shall serve to "protect" or provide "protection" for those areas required to be identified as such.

B. In lieu of dedication to Marion County, Conservation Easements may be dedicated to a public or private non-profit conservation agency or organization; or to a quasi-public agency or organization; or to a governmental agency. Conveyances to parties other than Marion County will require a verification of acceptance by the receiving entity prior to filing of the Conservation Easement, and the approval of DRC.

C. When property subject to protection is proposed for fee simple conveyance to a third party, said conveyance will require a verification of acceptance by the receiving entity prior to the conveyance

and the approval of DRC. The conveyance will also include establishing a Conservation Easement dedicated to Marion County, reflecting Marion County's interest in the creation and designation of the property for protection.

D. A Conservation Easement held by Marion County may be released. Any release requires approval by the Board with a recommendation from DRC. A request by a land owner to release any Conservation Easement shall be accompanied by and based on sufficient study and analysis of the Easement land which demonstrates that the purpose for which the Easement was dedicated has changed in a manner found warranting release; such changes may include, but are not limited to:

(1) An alternative form of protection or mitigation as been provided, either on-site or off-site;

(2) The Easement land has been irrevocably damaged by natural disaster;

(3) The Easement land's listed species and/or area/community has been irrevocably damaged by disease or other natural threat;

(4) The Easement land was subject to the County's TDR program and the land owner has obtained and shall redeem/relinquish TDCs equal to the creation/exchange ratio in effect at the time the release is proposed and approved.

E. Marion County may elect to designate lands subject to a Conservation Easement as Conservation or Natural Reservation on the Marion County Comprehensive Plan Future Land Use Map Series, subject to the ownership of said lands.

Division 7 Tree Protection and Replacement

Sec. 6.7.1 Purpose and intent.

A. The purpose of this division is to regulate the protection, removal, replacement, and maintenance of trees in public and private property. Tree protection and replacement shall work cooperatively with landscaping requirements to preserve and enhance the aesthetic quality of Marion County, complementing the natural and built environments, while providing shade and habitat through:

(1) Preservation of existing trees and native plant communities;

(2) Replacement of trees that are removed;

(3) Maintenance of trees and

(4) Prevention of tree abuse; and

(5) Enforcement.

Sec. 6.7.2 The preservation and replacement of trees and protected plant species shall apply to all development with the following exceptions:

A. The removal of trees for purposes of conducting bona fide agricultural uses such as field crops, landscape nursery, citrus nursery, forest crops, animal husbandry, greenhouses, aquaculture, silviculture and the like, on lands with an agricultural zoning classification.

B. Property used for bona fide agricultural use, as listed above, zoned other than agriculture and possessing an agriculture classification from the County Property Appraiser per § 193.461 FS. Lands with an urban land use designation may not use this exemption.

C. On lands where either of the two exemptions above has enabled tree removal without a permit, no applications for any land use changes shall be made within one year of the tree removal date unless:

(1) The applicant provides tree replacement at 100 inches DBH of native trees per acre, or lower based on the pre-clearing density of existing trees, or

(2) The applicant/owner provides payment into a Tree Mitigation fund in the equivalent amount of planting 100 inches DBH of native trees per acre or lower, based on the pre-clearing density of

existing trees.

D. The removal of trees which have a DBH of less than 10 inches, except those trees which have been designated replacement and conservation trees pursuant to Section 6.7.9.G.

E. The removal of trees on an individual parcel of record used or to be used for single-family dwellings.

F. The removal of trees associated with the County's construction, rehabilitation, or routine maintenance of roads and drainage systems within public rights-of-way or easements.

G. The removal of trees associated with the rehabilitation or routine maintenance of roads and drainage systems within private rights-of-way or easements.

H. Tree removal or trimming for the construction of firebreaks, firelines, and surveying.

I. The removal of trees which pose an immediate and direct threat to persons or property, and the removal of trees that are dead or dying due to natural causes.

J. Transplanting of any size tree.

K. Removal of trees required by a development plan which has been fully approved by the County.

L. Removal of exotic tree or nuisance tree species as listed by the UF/IFAS Assessment of Non-native Plants, "Prohibited" or "Invasive – Not Recommended" tables, as updated.

Sec. 6.7.3 Tree protection.

A. Design for the protection of trees.

(1) Every reasonable effort should be made to minimize tree removal. Tree preservation shall be an integral part of the site planning or subdivision design process. Tree preservation shall be conceived in a total pattern throughout the site, integrating the various elements of site design, preserving and enhancing the particular identity of the site.

(2) The preservation of existing trees and vegetation for use as perimeter land use buffers shall be considered during the site design process and implemented to preserve habitat while lowering the cost of development.

(3) In all cases, a post-development ratio of shade trees to the area of the site as required in Section 6.7.4.

(4) All trees with a DBH of 10 inches or larger shall be considered protected trees unless listed by the UF/IFAS Assessment of Non-native Plants, "Prohibited" or "Invasive – Not Recommended" tables, as updated.

(5) A proper evaluation shall be made to determine if existing protected trees, or groups of trees, are good candidates for preservation before final site plans are developed. The evaluation shall be used to guide decisions about tree preservation, tree protection, and tree removal and shall include:

(a) Determination of species of tree(s);

(b) Assessment of the health of the tree(s);

(c) Determination of the condition of the tree(s) based on the species, health, and age and whether the tree(s) will provide a lasting value to the finished project (trees with fast growth habits and have a shorter life span may not be desirable);

(d) Assessment of the size (DBH and canopy) of the tree(s);

(e) Assessment of the rarity, uniqueness, and character of the tree(s);

(f) Assessment of the historic value, status as a specimen tree, or other outstanding quality;

(g) An general overview of the site and whether the tree(s) will provide a lasting and positive contribution to the site and general surroundings, and

(h) Determination if any minor alternations to the site topography will impact the long-term

viability of preserving existing trees.

B. Tree protection zones are as follows:

(1) Tree Protection Zone (TPZ) is a defined area surrounding the trunk of a tree (or group of trees) to be preserved, intended to protect roots and soil to ensure future tree health and stability.

(a) All tree measurements for tree protection and preservation shall be made at 4.5 feet above grade to establish the correct diameter at breast-height (DBH).

(b) The TPZ shall be located at the dripline of the tree (or group of trees) to be preserved. For tree protection requirements, the dripline shall be indicated on a plan as required in Section 6.7.6.E and determined by either of the following methods:

1. Field location by either a Surveyor and Mapper, a Landscape Architect, or a Certified Arborist, or

2. Utilizing a "desktop canopy" rule generally understood as using one foot for every inch of DBH. For example, a 30 inch diameter tree would have a 30 foot radius dripline.

(2) The Critical Root Zone (CRZ) is the area of soil around a tree trunk where roots are located that provide stability and uptake of water and minerals required for tree survival.

(a) No excavation, filling, trenching, or other intense disruption of the root zone is allowed within the CRZ.

(b) The CRZ is established on a tree-by-tree basis through on-site review and assessment by either a Landscape Architect or a Certified Arborist prior to construction.

(c) Damage to roots in this area may result in penalties or fines.

(3) The County's Landscape Architect, or designee, may reduce the limits of the TPZ to allow authorized construction to occur.

(4) No reduction of the TPZ or removal of barricades may occur without prior written authorization from the County's Landscape Architect.

(5) The TPZ may be temporarily reduced in size and/or barricades may be temporarily removed to allow for minor construction or maintenance within the TPZ. Barricades shall be reinstalled as soon as work within the TPZ is completed.

(6) The TPZ shall not be reduced to any point within the CRZ.

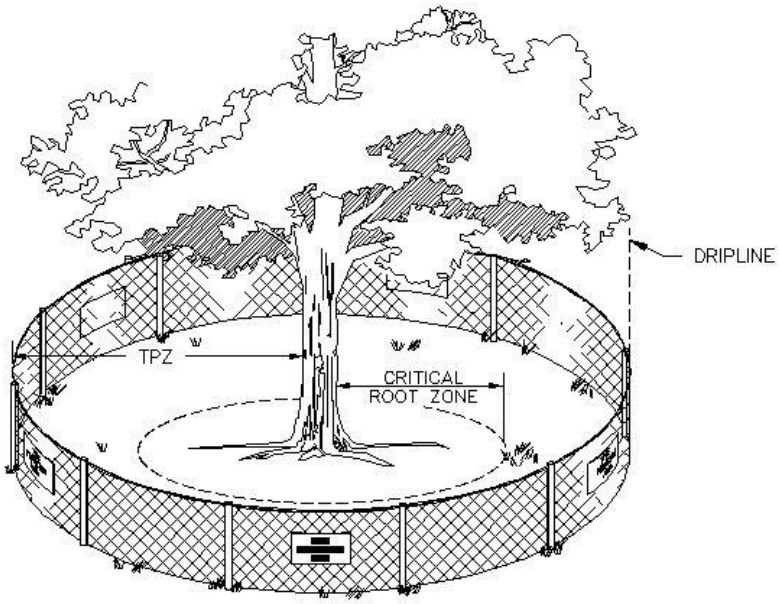

Figure 6.7-1 Tree Protection Zones

C. Tree protection barricades shall be:

(1) No less than four feet in height.

(2) Constructed of rigid material capable of surviving for the duration of the construction.

(3) Posted with highly visible signs placed on the tree protection barricades at each quadrant of single protected trees and along driplines of groups of trees being protected at 50 foot intervals or less. Signs shall include the words "Tree Protection Zone."

D. Pre-construction tree protection.

(1) The owner shall be responsible for insuring that all possible measures are taken to avoid damage to trees not approved for removal.

(2) Prior to any clearing, grubbing, or any construction, tree protection barricades shall be erected around all trees, or groups of trees, within the construction area which are to be preserved.

E. Tree protection shall continue during the course of construction. The following requirements shall be conditions of tree removal permits, all permits for construction in public rights-of-way, and all development permits issued under and pursuant to this Code:

(1) The cleaning of construction equipment or material or the disposal of waste materials including but not limited to, paint, oil, solvents, asphalt, concrete, and mortar within the TPZ of any tree which is being protected is not allowed.

(2) The movement of equipment or the storage of equipment, materials, debris, or fill within the TPZ of any tree which is being protected is not allowed.

(3) The contractor shall inspect all tree protection barricades and signs on a weekly basis during the course of construction. Any barricade or sign which has been damaged or is missing shall be replaced immediately.

(4) If any tree which has not been approved to be removed is destroyed, or receives major damage during construction, with the exception of natural events, so as to place its long term survival in question, the tree(s) must be replaced at an inch-to-inch basis of the total (combined) DBH of the tree(s) so destroyed or damaged. The replacement tree(s) shall be of comparable species of the destroyed or damaged tree(s) with a minimum replacement size of 3.5 inch caliper. The County reserves the right to establish a replacement value for such trees and payment into the Tree Mitigation Fund may be authorized by the County's Landscape Architect.

Sec. 6.7.4 Shade trees are required for all developments excluding residential developments.

A. The post-development ratio of shade trees to the area of the site shall be a minimum of one shade tree per 3,000 square feet.

B. Shade trees may include:

(1) Protected and preserved trees which have a favorable assessment, and/or

(2) Trees as required for buffers, parking areas, vehicle use areas, and building areas, and/or

(3) Trees as required as replacement trees.

C. When mature trees with a full canopy of 30 foot radius or larger, with a favorable assessment, are preserved on the project site, a credit of two shade trees may be used towards the overall shade tree requirement.

D. Required shade trees shall meet the minimum size requirements in Section 6.8.10.C.

Sec. 6.7.5 Tree Removal Permit.

A. For tree removals not associated with any development as outlined in this division, refer to Section 2.X.X – Stand Alone Permits. For all other tree removal applications, the approved development

plans shall serve as the Tree Removal Permit.

B. A tree removal permit shall be required for the removal of any tree with a DBH of 10 inches or larger, except for exempt activities as outlined in Section 6.7.2. A tree removal permit shall be obtained from the County's Landscape Architect, or designee, prior to any site clearing, grading, or for any construction which requires a permit from the Marion County Building Department. The failure to obtain any such permit when required shall be a violation of this Code, subject to penalties provided herein.

C. A tree removal permit shall be obtained by any public utility undertaking construction activities that require tree trimming or tree removal, unless the public utility has been granted an exemption. The Board may grant an exemption after reviewing policies submitted by a public utility which govern their tree trimming or tree removal practices and finding that such policies are consistent with the intent of the Code. Board granted exemptions will be valid for a period of three years from the date granted unless revoked. The Board shall provide 30 days notice to a public utility of intent to revoke any such exemptions.

D. Tree removal permits shall expire within one year or upon expiration of the building permit, whichever comes first. Trees authorized to be removed may not be removed after the permit expires unless a new permit is obtained pursuant to this division.

Sec. 6.7.6 Submittal requirements. The following requirements shall apply to the application for tree removal permits and are in addition to the Minimum Plan Requirements:

A. Depending on the density of existing trees, the applicant may provide a separate "Tree Removal and Preservation Plan." For development sites with lower density of trees, such information may be indicated on the Site Plan or the Landscape Plan. Either method used shall indicate the location of all trees, with a DBH of 10 inches and larger, to be removed and trees to be preserved. Preserved trees and replacement trees shall be indicated on the Landscape Plan to demonstrate the final appearance of the site.

B. Tree calculations shall include:

(1) The total numbers of existing trees within the site and the respective DBH of each tree;

(2) The pre-development ratio of native tree inches-per-acre;

(3) The total DBH inches of native trees to be removed; and

(4) The total DBH inches of native trees to be preserved.

C. A tree protection detail which graphically indicates the requirements of tree protection as required by this division.

D. List general prohibitions on the plan as stated in Section 6.7.3.E.

E. Indication of all TPZs on the site plan, grading plan and on which ever plan is used to demonstrate tree preservation and replacement.

F. Fees required for review and issuance of tree removal permits, inspections, and restoration plans shall be established by the Board, by resolution. Tree removal permit application fees for projects associated with any development (excluding stand alone permits) shall be included in the overall plan review and application fees available at the Office of the County Engineer.

Sec. 6.7.7 Review and approval procedures.

A. During review of tree preservation submittals, the County's Landscape Architect, or designee, may determine that modifications of the proposed plans or calculations are necessary. Conditions that may require changes include, but are not limited to, the following:

(1) Preserving any tree due to their age, size, rarity, uniqueness, historic value, status as a specimen tree, or other outstanding quality.

(2) Proposed grading or clearing activities do not follow the requirements of this division.

(3) Proposed habitat destruction which conflicts with the requirements in Division 6.6.

B. The applicant will be asked to revise and update the tree preservation information according to review comments.

C. After approval, the County's Landscape Architect, or designee, shall issue a tree removal permit if such tree removal is in accordance with all provisions of this Code. The approved development plans shall serve as the Tree Removal Permit.

Sec. 6.7.8 Protected tree replacement requirements. All trees not permitted for removal must be protected and maintained. For those protected trees permitted for removal, trees shall be replaced in accordance with the minimum standards set forth below.

A. Replacement is not required where the property owner retains existing trees on the site which total an average of 100 inches DBH per acre. If replacement is necessary, a minimum of 100 inches DBH per acre on the average shall be achieved.

B. If the pre-development number of inches is less than 100 DBH per acre on the average, the property owner shall replace trees to equal the pre-development number of DBH inches.

C. Replacement of trees less than 30 inches DBH and permitted for removal shall be as described below:

(1) Existing trees measuring 10 inches DBH to 19 inches DBH shall be replaced with a ratio of one inch replacement per two inches removed and the minimum replacement tree size is 3.5 inch caliper.

(2) Existing trees measuring 20 inches DBH to 29 inches DBH shall be replaced with a ratio of 1.5 inches replacement per two inches removed and the minimum replacement tree size is 3.5 inch caliper.

D. Replacement of trees 30 inches DBH or greater and permitted for removal shall be as described below:

(1) All trees which receive a favorable assessment may be approved for removal by the County's Landscape Architect, or designee, under the following circumstances:

(a) The tree materially interferes with the proposed location, service or function of the utility lines or services, or rights-of-way, and

(b) The tree cannot be preserved through re-design of the infrastructure.

(2) All trees which receive a favorable assessment shall be replaced inch-for-inch and the minimum replacement tree size is 4.0 inch caliper.

(3) All trees which receive an unfavorable assessment shall be replaced with a ratio of 1.5 inches replacement per two inches removed and the minimum replacement tree size is 3.5 inch caliper.

E. Trees removed pursuant to a permit for construction in rights-of-way, approved by the County, State or Federal authority, shall not be required to replace the DBH of trees removed if such authority demonstrates that such trees conflict with proposed utilities, drainage, or roadway construction.

Sec. 6.7.9 Replacement trees.

A. Replacement trees are a part of the comprehensive tree program and shall work in combination with required shade trees, buffer trees, and any other required landscaping.

B. All trees and/or palms used for tree replacement purposes shall be nursery grown and Florida No. 1 quality or better, as established by *Grades and Standards for Nursery Plants*, Department of Agriculture, State of Florida, as amended.

C. Replacement trees shall meet the minimum tree requirements established in Section 6.7.8.

D. Replacement trees shall be Florida native species compatible to the site.

E. Palms may only be used to replace palms that are permitted for removal. Replacement palms shall have a clear trunk height of 10 foot minimum. The use of palms shall work with the required palm ratio as required in Section 6.8.10.C.

F. For trees removed pursuant to a tree removal permit, required replacement trees shall be located within the parcel boundaries shown on the site plan. If space constraints are such that the replacement trees cannot be located within the parcel boundaries using sound horticultural and design principles, then the replacement trees may be located on public property at the County's discretion. The public property location shall be specifically designated by the County and such replacement trees shall be donated to the County. The County will be responsible for maintenance of donated trees on public property.

G. As an alternative to replacement, the property owner may comply with the requirement of Section 6.7.8 by designating existing trees on site which are native tree species and less than 10 inches DBH as conservation trees, provided that the property owner takes steps to designate and protect such conservation trees.

A property owner designating conservation trees shall record in the public records of Marion County, a notice to subsequent property owners that the site contains conservation trees, subject to maintenance requirements, with reference to the development plan on file with the County designating such trees. A copy of such recorded notice on a form provided by the County shall be supplied to the Planning/Zoning Manager, or designee, prior to the issuance of a Certificate of Occupancy.

Sec. 6.7.10 Tree Mitigation Fund.

A. The Tree Mitigation Fund has been created in the general trust fund of Marion County for the purpose of accepting and disbursing the contributions made to the Board as part of the tree replacement monies deposited for tree replacement purposes. This fund shall be used to enhance tree replacement in Marion County.

B. An application to pay in lieu of installing any required replacement trees is made through the County's Landscape Architect. The "pay in lieu" option shall only be used for replacement trees and for no other landscape or tree planting requirement as stated in this Code.

C. At the County's discretion, in lieu of installing replacement trees, a permittee may pay a fee into the Tree Mitigation Fund at a per-tree cost. The amount of such fee shall be determined on a case by case basis through the public solicitation for bids and the amount shall be based on:

(1) The wholesale cost of material

(2) Cost of labor for installation

(3) Cost of maintenance for two years

D. Payment into the Tree Mitigation Fund shall be recommended by the County's Landscape Architect and approved by the Board prior to issuance of the tree removal permit.

E. Tree mitigation funds shall be used by the County for the installation, establishment, and maintenance of trees on public property within Marion County.

Sec. 6.7.11 Tree maintenance and management.

A. Unless otherwise permitted by this division, no person shall cause or authorize:

(1) The removal of any protected tree without first obtaining a tree removal permit as required by this Code.

(2) Tree abuse which includes:

(a) Hatracking a tree; or

(b) Destroying the natural habit of tree growth; or

(c) Pruning which leaves stubs or results in a flush cut; or splitting of limb ends; or

(d) Removing tree bark to the extent that if a line is drawn at any height around the circumference of the tree, over 1/3 of the length of the line falls on portions of the tree where bark no longer remains; or

(e) Using climbing spikes, nails, or hooks, except for purposes of total tree removal or as specifically permitted by standards set by the ANSI, as updated; or

(f) Pruning that does not conform to standards or recommendations set by the ANSI, as updated; or

(g) Pruning of live palm fronds which initiate above the horizontal plane; or

(h) Overlifting a tree; or

(i) Shaping a tree.

(3) Any encroachments, excavations, or change the natural grade within the Tree Protection Zone (TPZ), as defined herein, of a tree unless it can be demonstrated to the County's Landscape Architect prior to commencement of said activity, that the activity will not negatively impact any tree.

(4) Land clearing or the operation of heavy equipment in the vicinity of a protected tree without placing and maintaining a protective barrier around the TPZ.

(5) The storage or use of materials or equipment within the TPZ of any protected tree, or attachments, other than those of a protective and non-damaging nature, to any tree.

(6) Land clearing, including the removal of understory, without first obtaining authorization as herein provided.

B. The following requirements shall be conditions of any tree removal permit which includes a requirement for replacement trees:

(1) Replacement trees required in conjunction with a commercial or industrial development or subdivision approval shall be considered required improvements and shall be subject to certification of satisfactory completion contained in this Code.

(2) All replacement trees shall be maintained in a living, healthy condition for a period of two years following final inspection and approval, or else be replaced, by the owner, successor, or assignee. No replacement shall be required beyond such two-year period. After the two-year period, the owner of record shall be responsible for maintaining the replacement trees in a healthy condition.

(3) The permittee or the property owner shall record in the public records of Marion County, appropriate notice to subsequent owners of the maintenance period or replacement requirement for replacement trees with reference to the development plans on file with the County identifying such trees. A copy of such recorded notice shall be supplied to the Zoning Manager, or his designee, prior to the issuance of a Certificate of Occupancy.

(4) For residential and mixed use developments where tree preservation and replacement requirements are approved with any application, the developer shall require future property owners of lots where protected trees have been preserved to continue to protect and preserve such trees. Such requirements shall run with the parcel until removal of the tree(s) is required due to age, declining health, or for the protection of public safety.

Sec. 6.7.12 Tree inspections. The following tree preservation and/or replacement inspections shall be required to ensure compliance with this division and with the requirements of permits issued hereunder. No Certificate of Occupancy or Certificate of Completion, as appropriate, may be issued for any development involving the removal of trees requiring a permit until all of the following inspections have been completed and approval is granted:

A. A preliminary inspection shall be conducted by the County's Landscape Architect, or designee, to confirm that the permittee has marked trees permitted to be removed and has installed tree protection barricades around trees, or groups of trees, to be preserved prior to any clearing, grubbing, or construction. Any deficiencies noted during this inspection shall be cause to withhold approval until they are corrected by the permittee and reinspected. Approval, after preliminary inspection, shall be noted by the County's Landscape Architect, or designee, on the permit and shall constitute notice to proceed with tree removal.

B. A final inspection shall be conducted by the County's Landscape Architect, or designee, after completion of tree removal and replacement in accordance with the approved plans. Approval, after final inspection, shall be noted by the County's Landscape Architect, or designee, on the permit and shall constitute notice of commencement of the required maintenance period of replacement trees if replacement is required.

Sec. 6.7.13 Violation and Enforcement. It shall be a violation of this Code to fail to obtain a tree removal permit when required, to fail to comply with any condition of any tree removal permit issued, or to violate any provision of this division. When such violations occur, the following sanctions apply:

A. If unauthorized tree removal or site grading occurs, the County's Landscape Architect, or designee may issue a stop work order for the affected project area of such unauthorized tree removal and all related site work will cease until a restoration plan is prepared by the owner, developer, contractor, or agent, and then submitted to, and approved by the County's Landscape Architect, or designee.

B. If a restoration plan is not presented within 30 days, the owner, developer, contractor, or agent will be cited by the County's Landscape Architect, or designee, and referred to the Code Enforcement Board.

C. A Certificate of Occupancy will not be granted until all trees and vegetation shown upon the approved restoration plan have been installed and all site grades restored.

D. All trees and vegetation shown upon the approved site restoration plan must be installed on the property and the site grade restored even if project termination occurs before completion of the project. Failure to complete the approved restoration plan is a violation of this Code and the owner, developer, contractor, or agent will be cited by the County's Landscape Architect, or designee, and referred to the Code Enforcement Board.

E. In addition to all other remedies provided herein, the Landscape Architect may seek injunctive relief or the imposition of fines and penalties for any violation of this division.

Division 8 Landscaping

Sec. 6.8.1 Purpose and intent.

The purpose and intent of this division is to provide landscaping guidelines establishing minimum standards and criteria for the design, installation, and maintenance of landscaping which enhances the aesthetic appearance of Marion County, complimenting the natural and built environments, reducing noise and glare, improving air and water quality, providing shade and habitat, and buffering the aspects of development.

Sec. 6.8.2 A landscape plan which indicates the following is required for all development except for individual single-family homes and duplexes:

A. All existing landscaping, indigenous open space, and natural features;

B. Locations of existing protected trees, labeled and with sizes provided, groups of trees, landscaping and other vegetation to be preserved;

C. Vegetation and tree protection barricades;

D. All replacement trees as required per Section 6.7.8;

E. All proposed landscape areas, labeled and with sizes provided;

F. Construction details as applicable, including but not limited to:

(1) Tree protection;

(2) Tree, palm, and shrub installation;

(3) Details for specialized installations;

(4) Elevation drawings of walls proposed for buffers and/or screening; and

(5) Cross section of proposed walls/berms/combination for buffers.

G. Plant schedule:

(1) A key matching the plants being specified (may be plant symbols or written)

(2) Quantities of plants being specified

(3) Common plant names

(4) Scientific plant names

(5) Plant specifications including height, spread, and spacing

(6) Native status

H. Calculations for required landscaping:

(1) Tree preservation and replacement

(2) Shade tree requirements

(3) Buffers

(4) Parking areas

(5) Vehicle use areas

I. Notes including installation instructions and special requirements related to licensing, tree protection, maintenance, fertilizer use, and watering.

J. Notes regarding tree protection and inspections as outlined in Section 6.7.3 and 6.7.12 and shall also be provided on the site and grading plan sheets.

Sec. 6.8.3 Landscape design standards.

A. All new landscapes in Marion County shall be designed to protect the County's unique natural resources by conserving water, protecting the quality of groundwater, reducing waste and pollution, creating wildlife habitat, and preventing erosion by implementation of Florida-Friendly Landscaping (FFL) by UF/IFAS and FDEP, including but not limited to:

(1) Right plant, right place;

(2) Water efficiently;

(3) Fertilize appropriately;

(4) Mulch;

(5) Attract wildlife;

(6) Manage yard pests responsibly;

(7) Recycle yard waste;

(8) Reduce stormwater runoff; and

(9) Protect the waterfront.

B. All plant species listed as "Prohibited" in the UF/IFAS Assessment of Non-native Plants (Central Zone) shall be removed from proposed development sites. Plant species listed as "Invasive – Not Recommended" shall be removed from all proposed development sites outside of the Urban

Growth Boundary (UGB); they may remain within the UGB with authorization from the County Landscape Architect.

C. Landscaping within rights-of-way shall require approval by the County Engineer, or designee.

D. Trees shall not be located in areas that will cause conflict with overhead or underground utilities. Large trees shall not be located within 30 feet of power lines. Alternative design strategies may be approved by the County's Landscape Architect when conflicts with existing utilities cannot be avoided.

Sec. 6.8.4 For non-residential development, at least 20 percent of the land to be developed shall be landscaped.

A. When a project area is less than the size of the overall parcel to be developed, the required landscape area calculation may be reduced to apply to the project area as authorized by the County Landscape Architect. All other requirements directed by the Board, DRC, or included in this division shall apply.

B. Landscape areas shall include:

(1) Buffers;

(2) Landscaping required for parking areas;

(3) Building landscaping; and

(4) Service and equipment area screening.

C. Landscape areas may also include planted stormwater management areas with a depth of four feet or less.

D. Credit towards the landscape area requirements may be allowed for all or part of preserved native habitat if the applicant demonstrates that it includes one or more of the following:

(1) Tree clusters including native vegetative communities are protected from development impact.

(2) Vegetative areas with native understory flora are protected from development impact.

Sec. 6.8.5 For new residential developments and mixed use developments, landscape plans shall demonstrate the following:

A. The landscape design standards in Section 6.8.3 shall be provided for any proposed landscaping in the following areas:

(1) Development entry areas.

(2) Medians and/or boulevards.

(3) Community buildings.

(4) Recreation and common areas.

B. New residential and mixed use developments shall create Marion-Friendly Landscape Areas (MFLA) to minimize impacts to the quality and quantity of natural groundwater recharge.

(1) Non-residential components of mixed use development shall adhere to the landscape requirements as in accordance with Section 6.8.4.

(2) MFLA shall not be located on residential lots.

(3) The MFLA requirements for the residential components are as follows:

(a) Within the Primary SPZ, 20 percent of the project area shall be MFLA.

(b) Outside of the Primary SPZ, 15 percent of the project area shall be MFLA.

(4) The area limitations under subsection (3), above, may be reduced in accordance with a mitigation strategy approved by the County.

C. The developer shall inform future owners within residential developments that all permit

applications for construction shall include a landscape plan which meets the requirements of this division.

D. In new residential developments with more than 50 lots, the developer shall also promote the practices and principles of FFL as described in the Florida Yards and Neighborhoods Handbook, as amended. A program which promotes these principles shall be incorporated into and made part of the restrictive covenants and shall include:

(1) Information about the applicable landscaping requirements under this division and under Division 6.8;

(2) Procedures for future owners to follow when implementing FFL on individual lots, and

(3) Water conservation and FFL educational materials to all new homeowners; and

(4) Information regarding landscape irrigation scheduling as stipulated in Section 6.9.9.

Sec. 6.8.6 Buffers.

A. It is the intent of this section to eliminate or reduce the negative impacts of the adjacent uses upon each other such that the long term continuance of either use is not threatened by such impacts and the uses may be considered compatible.

B. Buffers shall provide a year-round screen and provide an aesthetic quality, especially along public rights-of-way, which enhance travel corridors and screen unsightly areas from public view.

C. Plant species shall be mixed to provide diversity and appeal.

D. Buffers may consist of landscaping, buffer walls, fencing, berms, or combinations thereof which work cohesively to achieve the intent of buffering.

E. Every development, with the exception of the construction of an individual single-family residence or duplexes on an individual parcel of record, shall provide sufficient buffering when topographical or other barriers do not provide reasonable screening.

F. If buffers are required, the length shall be measured along each property line, and shall exclude driveways and other access points.

G. No buildings, structures (other than buffer walls or buffer fences), storage of materials, or parking shall be permitted within the buffer area.

H. Buffers shall not be located on any portion of an existing or dedicated right-of-way.

I. Arrangement of plantings in buffers shall provide maximum protection to adjacent properties, avoid damage to existing trees and plant material, and take mature growing sizes into consideration regarding shade, root damage, and interference with nearby utilities.

J. Required buffer types between land uses.

(1) Specialized Commerce Districts include a mix of both commercial and industrial land uses, therefore, buffer requirements shall apply only to lots on the perimeter of the district

(2) Buffer installation and maintenance shall be provided concurrently with the development of the more intense land use, with the following deviations:

(a) When a new but less intense land use is developed adjoining a pre-existing developed site with a higher intensity use, the new use is subject to providing the required land use buffer.

(b) When a new but less intense land use is responsible for providing the required land use buffer, the developer may reduce the required buffer by one buffer type with acknowledgement of the buffer reduction clearly noted on the development plan.

(c) The development of an individual single family residence or duplex is exempt from providing the required buffer.

(3) In interpreting and applying the provisions of buffers, development is classified into categories

shown in Table 6.8-1.

(4) Table 6.8-2 provides the type of buffer required between a proposed use and an existing use, or in the absence of an existing use.

Table 6.8-1. Buffer Type Requirements

AG	Agriculture, Rural Lands, Natural Reservation
SFR	Single family, duplex residential
MF	Multi-family residential
COM	Commercial, RV parks, Commercial Recreation
IND	Industrial uses
PUB	Public Use (including Government, Institutional, and related Professional Offices)
ROW	Arterial or Collector Right-of-Way or Road Easement

Table 6.8-2 Land Use Categories for Buffers

		Permitted or Existing Use						
		AG	**SFR**	**MF**	**COM**	**IND**	**PUB**	**ROW**
Proposed Use	**AG**	-	-	-	-	-	-	-
	SFR	E	-	C	A	B	C	C
	MF	E	A	-	A	B	C	C
	COM	D	B	B	-	B	C	C
	IND	B	B	B	B	-	B	D
	PUB	E	B	C	C	C	-	C

K. Description of buffer classifications. The content and composition of each buffer type is described in the following items. The design professional shall use these requirements to design buffers that are thoughtfully designed and enhance perimeter of the development site. Visual screening shall be achieved through the use of proper plant material, arrangement, and layering.

(1) A-Type buffer shall consist of a 30 foot wide landscape strip without a buffer wall. The buffer shall contain at least three shade trees and five accent/ornamental trees for every 100 lineal feet or fractional part thereof. Shrubs and groundcovers, excluding turfgrass, shall comprise at least 50 percent of the required buffer area and shall form a layered landscape screen with a minimum height of three feet achieved within one year of planting.

(2) B-Type buffer shall consist of a 20 foot wide landscape strip with a buffer wall. The buffer shall contain at least two shade trees and three accent/ornamental trees for every 100 lineal feet or fractional part thereof. Shrubs and groundcovers, excluding turfgrass, shall comprise at least 50 percent of the required buffer.

(3) C-Type buffer shall consist of a 15 foot wide landscape strip without a buffer wall. The buffer shall contain at least two shade trees and three accent/ornamental trees for every 100 lineal feet or fractional part thereof. Shrubs and groundcovers, excluding turfgrass, shall comprise at least 50 percent of the required buffer and form a layered landscape screen with a minimum height of three feet achieved within one year.

(4) D-Type buffer shall consist of a 15 foot wide landscape strip with a buffer wall. The buffer shall contain at least two shade trees and three accent/ornamental trees for every 100 lineal feet or fractional part thereof. Shrubs and groundcovers, excluding turfgrass, shall comprise at least 25 percent of the required buffer.

(5) E-Type buffer shall consist of a five foot wide landscape strip without a buffer wall. The buffer shall contain at least four shade trees for every 100 lineal feet or fractional part thereof. Shrubs

shall be planted in a double-staggered row and be capable of reaching a maintained height of six feet within three years. Groundcovers and/or turfgrass shall not be used in this buffer.

L. Buffer walls, buffer fences, and berms.

(1) Where buffer walls are required by this article, a combination of buffer walls and berms may be used to meet the intent of buffering. Buffer fences may be used to as a substitute for buffer walls with approval of the DRC. The buffer walls, buffer fences, and berms shall:

(a) Not be constructed or installed in a manner which creates a threat to public safety or interferes with vehicular circulation;

(b) Be designed to be compatible with existing and proposed site architecture and the character of the surrounding and adjacent settings including the style and selection of materials; and

(c) Be situated so that the wall or fence components are within the buffer limits and any required landscaping shall be installed on the public view side of the wall.

(2) When a buffer wall is required, the buffer wall may be used in conjunction with a berm to achieve a minimum final elevation of six feet in height. When buffer walls, berms and/or combinations of each are used, they shall be constructed to:

(a) Ensure that historic and/or proposed water flow patterns are accommodated;

(b) Not interfere with or obstruct any stormwater facilities; and

(c) Provide sufficient ingress/egress for bicycle traffic and pedestrians access with proper arrangement to limit visibility into the proposed development.

(3) If planted berms are used, the top of the berm shall have a four foot wide maintainable area. The maximum side slope for a berm planted with shrubs and woody groundcovers shall be 3:1. The maximum side slope for a berm planted with turfgrass shall be 3.5:1. Planting trees or shrubs on the very top of a berm is discouraged.

M. Buffer plantings shall be irrigated appropriately for the specific plant species and characteristics of the site to promote healthy growth.

N. Buffer areas shall be continually maintained and kept free of all trash and debris.

Sec. 6.8.7 Parking areas and vehicular use areas.

A. A minimum five foot wide landscape area consisting of shrubs and groundcovers, excluding turfgrass, shall be provided around the perimeter of parking areas to form a landscape screen with a minimum height of three feet achieved within one year of planting. A land use buffer that abuts a parking area may satisfy this requirement.

B. Landscaping adjacent to parking areas and vehicular use areas shall be protected from being damaged. Landscaping at the end of parking stalls shall be offset away from the parking stall to allow for vehicle overhang. The area between the landscape screening and the end of the parking stall shall be mulched and contain no vertical irrigation components.

C. A landscaped parking lot island shall be located every ten parking spaces and shall be a minimum of 200 square feet in size with properly drained soils. For paved parking areas within a Primary SPZ, including those with permeable or porous surfaces, parking lot islands shall be completely planted with shrubs or groundcovers; the use of turfgrass is prohibited.

D. Trees within parking areas.

(1) All trees required for parking areas and vehicular use areas shall be shade trees, unless required otherwise by provisions in this section.

(2) All parking lot islands, including terminal parking lot islands, shall contain one shade tree unless site lighting fixtures are proposed in said island. Double parking lot islands (where double-loaded parking bays are proposed) shall contain two shade trees.

(3) In parking lot islands with site lighting fixtures, an arrangement of one or two accent/ornamental trees shall be installed depending on the size and configuration of the island.

(4) Parking lot islands with control signage may contain other tree (or palm) species, in lieu of shade trees, which will not conflict with the visibility of such signage.

E. Each row of parking spaces shall be terminated by a landscaped island.

F. Divider medians may be used to meet parking area landscape requirements.

(1) The minimum width of a divider median shall be eight feet.

(2) One shade tree shall be provided per 50 lineal feet of divider median.

G. To offset heat gain from paved surfaces, shade trees as required in Section 6.7.4 should be located to provide as much shade as possible on such surfaces.

H. Parking lot screening must be achieved regardless of other landscaping requirements in this article. Shade trees as required in Section 6.7.4 may be integrated into the parking area landscaping.

I. All landscaping in parking areas and street frontages shall be placed so that it will not obstruct any sight triangle.

Sec. 6.8.8 Building landscaping.

A. Landscape plantings shall be provided along the public view sides of all proposed structures to reduce the monotony of large blank walls, reduce heat gain and glare, and enhance the aesthetic appearance of the building.

B. Landscape areas shall be provided adjacent to or within 25 feet from the building walls and shall extend along 60 percent of the total length of the wall, excluding those areas required for access to the building.

C. Landscape areas shall be a minimum of five feet wide allowing for a minimum distance of two feet from the façade to the innermost plants.

D. Large trees shall not be located within 20 feet of a building. Accent/ornamental trees shall be located sufficiently to allow for healthy growth and to minimize the need for pruning.

Sec. 6.8.9 Service and equipment areas.

A. Utility areas and loading/unloading areas shall be screened as follows:

(1) A planting area a minimum of three feet wide and shall form a continuous three foot high landscape screen, or

(2) Buffer fencing with a minimum height of three feet.

B. Garbage collection areas (dumpster pad) shall be screened with a wall, buffer fencing, or a landscape screen capable of reaching a minimum height of six feet within three years.

C. Trees and shrubs shall remain eight feet from any fire service connection.

D. Exterior air conditioning components shall be screened by locating the equipment away from public view or through the use of a landscape screen with a minimum height of three feet.

Sec. 6.8.10 General planting requirements.

A. All trees, palms, shrubs, and groundcovers shall be nursery grown and Florida No. 1 quality or better, as established by *Grades and Standards for Nursery Plants*, Department of Agriculture, State of Florida, including latest updates, as amended.

B. Plant palettes shall be appropriate for the development site and provide the highest level of diversity as practicable.

C. Planting specifications are listed as follows:

(1) Native plant requirements:

(a) Within the UGB, a minimum of 25 percent of all proposed plant quantities, excluding turfgrass, shall be Florida native species suitable for use in Marion County.

(b) Outside of the UGB a minimum of 35 percent of all proposed plant quantities, excluding turfgrass, shall be Florida native species suitable for use in Marion County.

(c) A minimum of 50 percent of the required shade trees shall be Florida native species suitable for use in Marion County.

(d) To promote biological diversity, no more than 50 percent of the required shade trees for a development shall be of one species.

(2) The use of invasive plant species is based on the UF/IFAS Assessment of Non-native Plants (Central Zone) as updated.

(a) Plant species listed as "Prohibited" are not permitted for use in any proposed development.

(b) Plant species listed as "Invasive – Not Recommended" are not permitted for use in any development outside of the UGB. This group of plants may be used within the UGB with subject to approval by the County Landscape Architect.

(c) Plant species listed as "Caution" may be used provided specific management strategies and monitoring are included in the project's BMP manual.

(3) Trees

(a) Shade trees shall have a minimum caliper of 3.5 inches.

(b) Accent or ornamental (understory) trees shall have a minimum overall height of six feet and a minimum spread of 42 inches upon installation.

(4) Palms

(a) Not more than 25 percent of all required trees shall be palm trees unless a higher percentage is authorized as stated in Section 6.7.9.

(b) Additional palms may be provided in excess of the 25 percent threshold when three palms are used to substitute one required tree. Where specimen palms are specified, substitution may be a one-to-one ratio.

(c) Palm trees shall not be substituted for required shade trees.

(d) Palms shall have a clear trunk height of 10 feet minimum.

(5) Shrubs shall be a minimum height of 18 inches spaced appropriately for the species and the required screening and maintenance height.

(6) Groundcovers shall be those species of plants with a mature growing height of 24 inches maximum and spaced up to 2' – 3' on-center.

(7) Vining groundcovers shall have a minimum of three runners per plant. Vines may be spaced accordingly for the proposed use.

(8) Turfgrass may be of any variety which is adapted and suitable for use in Marion County. The use of rolled turf is prohibited on property with public access unless the supportive netting is removed and the integrity of the turf is not jeopardized during installation.

D. Mulch types shall be of a renewable resource or a recycled product. The use of cypress mulch is discouraged.

Sec. 6.8.11 Landscape Installation.

A. Any person providing landscape installation services for hire shall meet the licensing and certification requirements under Section 6.8.15.

B. All plantings shall be installed according to current best management practices.

C. Trees and palms shall be properly planted and guyed or staked.

D. All plantings shall be properly watered during installation and through the establishment period for healthy growth as recommended by UF/IFAS.

E. Installation shall mean survival in perpetuity, and replacement if necessary, of all materials. Dead and/or dying plant material shall be replaced by the owner within 30 days of notification by the County.

Sec. 6.8.12 Landscape completion inspection requirements.

Upon completion of the installation, the contractor shall request an inspection by the design professional. A Landscape and Irrigation As-Built Certification shall be signed and sealed by the design professional and submitted to the County Landscape Architect prior to the issuance of a Certificate of Occupancy.

Sec. 6.8.13 Landscape Maintenance.

A. All landscape areas shall be maintained in accordance with the Florida-Friendly Best Management Practices for Protection of Water Resources by the Green Industries, UF/IFAS and FDEP.

B. Trees or palms shall not be severely pruned or shaped. The natural growth habit of a tree or palm shall be considered during the design phase to avoid maintenance conflicts.

C. Trees or palms which are guyed or braced shall have such guying or bracing removed once sufficient root growth has enable the tree or palm to support itself. Damaging trees with guying devices shall be considered a violation of this Code. Damaged trees shall be replaced at the expense of the owner.

D. The alteration of any required and approved landscape area without obtaining prior written approval from the County is prohibited. The expansion of drought tolerant landscaping, excluding the replacement of planted areas with turfgrass, or replacing dying or diseased plants with similar plant material is excluded.

E. Buffers and screening plantings shall provide healthy appearance year round and be maintained at the required minimum heights.

Sec. 6.8.14 Fertilizers and other landscape chemicals.

A. Applicability.

(1) This section shall be applicable to and shall regulate any and all applicators of fertilizer and areas of application of fertilizer within the unincorporated area of Marion County, unless such applicator is specifically exempted by the terms of this section from the regulatory provisions of this Code. This section shall be prospective only, and shall not impair any existing contracts.

(2) This section requires the use of BMPs which provide specific management guidelines to minimize negative secondary and cumulative environmental effects associated with the misuse of fertilizers.

B. Exemptions.

The provisions set forth above in this section shall not apply to:

(1) Bona fide farm operations as defined in the Florida Right to Farm Act, § 823.14 FS, provided that fertilizers are applied in accordance with the appropriate Best Management Practices Manual adopted by the Florida Department of Agriculture and Consumer Services, Office of Agricultural Water Policy for the crop in question.

(2) Any lands used for bona fide scientific research, including, but not limited to, research on the effects of fertilizer use on urban stormwater, water quality, agronomics, or horticulture.

C. Fertilizer content and application rates.

(1) Fertilizers applied to turfgrass and/or landscape plants within Marion County shall be applied in

accordance with directions provided by FAC Rule 5E-1.003(2), *Labeling Requirements for Urban Turf Fertilizers.*

(2) Fertilizer containing nitrogen or phosphorus shall not be applied before seeding or sodding a site, and shall not be applied for the first 30 days after seeding or sodding.

(3) Fertilizers should be applied to turf and/or landscape plants at the lowest rate necessary. Nitrogen shall not be applied at an application rate greater than 0.7 lbs of readily available nitrogen per 1,000 square feet at any one time based on the soluble fraction of formulated fertilizer, with no more than 1 pound total nitrogen per 1,000 square feet applied at any one time, and not to exceed the nitrogen recommendations set forth below on an annual basis:

Table 6.8-3 Fertilizer application rates

Grass Species	Maximum N Application Rate (Lbs/1,0000sf^2/year)
Bahia	3
Bermuda	4
Centipede	2
St. Augustine	3
Zoysia	4

(4) No phosphorus fertilizer shall be applied to existing turf and/or landscape Plants within the County at application rates which exceed 0.25 pounds phosphorus per 1,000 square feet per application nor exceed 0.50 pounds phosphorus per 1,000 square feet per year.

(5) Nitrogen or phosphorus fertilizer shall not be applied to turf or landscape plants except as provided in (1) above for turf, or in UF/IFAS recommendations for landscape plants, vegetable gardens, and fruit trees and shrubs, unless a soil or tissue deficiency has been verified by an approved test.

D. Timing of fertilizer application.

No applicator shall apply fertilizers containing nitrogen and/or phosphorus when soils are saturated.

E. Fertilizer-free zones.

(1) Fertilizer shall not be applied to turf or landscape plants within 30 feet of any pond, stream, watercourse, lake, canal or wetland. The use of macro-tab slow release fertilizer tablets for landscape plants which are installed within the plant pits during plant installation is allowed.

(2) Fertilizer shall not be applied to turf grass within the following areas:

(a) Seventy five feet of the WBSL of any spring, pond, stream, watercourse, lake, wetland or sinkhole or other karst feature that has an opening at the surface.

(b) Fifteen feet from the top of the bank of any drainage retention area, canal, or from the top of a seawall, unless a deflector shield, drop spreader, or liquid applicator with a visible and sharply defined edge, is used, in which case a minimum of 3 feet shall be maintained.

(3) In the event an area is included in one or more of the areas described in paragraph (2) above, the more restrictive provision (i.e., the larger distance) shall apply.

(4) Newly planted turf and/or landscape plants may be fertilized in this zone only for a 60 day period beginning 30 days after planting if need to allow the plants to become well established. Caution shall be used to prevent the direct deposit of nutrients into the water.

F. Low maintenance zones.

A 10 foot low maintenance zone is required from any pond, stream, water course, lake, wetland, or from the top of a seawall. A swale/berm system is recommended for installation at the landward edge of this low maintenance zone to capture and filter runoff. If more stringent County regulations

apply, this provision does not relieve the requirement to adhere to the more stringent regulations. No mowed or cut vegetative material shall be deposited or left remaining in this zone or deposited in the water. Care should be taken to prevent the over-spray of aquatic weed products in this zone.

G. Impervious surfaces.

Spreader deflector shields are required when fertilizing via rotary (broadcast) spreaders. Deflectors must be positioned such that fertilizer granules are deflected away from all impervious surfaces, fertilizer-free zones and water bodies, including wetlands. Fertilizer shall not be applied, spilled, or otherwise deposited on any impervious surfaces. Any fertilizer applied, spilled, or deposited, either intentionally or accidentally, on any impervious surface shall be immediately and completely removed to the greatest extent practicable. Fertilizer released on an impervious surface must be immediately contained and either legally applied to turf or any other legal site, or returned to the original or other appropriate container. In no case shall fertilizer be washed, swept, or blown off impervious surfaces into stormwater drains, ditches, conveyances, or water bodies.

H. Management of grass clippings and vegetative matter.

In no case shall grass clippings, vegetative material, and/or vegetative debris be washed, swept, piled or blown off into stormwater drains, ditches, conveyances, water bodies, wetlands, or sidewalks or roadways. Any material that is accidentally so deposited shall be immediately removed to the maximum extent practicable.

I. Training for fertilizer applicators.

(1) Commercial applicators of fertilizer within the unincorporated area of Marion County, shall maintain current Limited Urban Commercial Fertilizer Applicator Certification through the Florida Department of Agriculture and Consumer Services by January 1, 2014, per §482.1562 FS.

(2) Any other person whose duties include the application of fertilizer not required to maintain certification in (1) above, shall obtain a GI-BMP Certificate of Completion within six months of assuming such duties.

(3) Private homeowners are required to follow the recommendations of the *Florida Yards and Neighborhoods Handbook* by FDEP and UF/IFAS, as amended except to the extent this Code provides more stringent requirements.

J. Enforcement.

(1) In addition to county code enforcement officers, the County Administrator may also delegate enforcement responsibility for this section to agencies and departments of Marion County government, in accordance with state and local law.

(2) Funds generated by penalties imposed under this section shall be used by the County for the administration and enforcement of section § 403.9337 FS, and the corresponding sections of this Code, and to further water conservation and nonpoint pollution prevention activities.

K. Penalties.

(1) Violation of any provision of this section shall be subject to the following penalties:

(a) First violation: Written Notification and Education.

(b) Second violation: Written Notification and Education.

(c) Third violation: Fifty dollars ($50).

(d) Fourth and subsequent violation(s): One Hundred dollars ($100).

(2) Each day in violation of this section within a 365-day period, beginning the date of the first violation, shall constitute a separate offense. The Board may take any other appropriate legal action, including but not limited to emergency injunctive action, to enforce the provisions of this section.

Sec. 6.8.15 Landscape installation and maintenance licensing and certification.

A. Landscape installation professionals performing work for hire within the unincorporated areas of Marion County shall be landscape contractors licensed by the Marion County Building Department, unless otherwise licensed by the State of Florida.

(1) Unless subject by Florida Statutes to certain continuing education requirements, contractors licensed under this section are required to complete a minimum of eight Professional Development Hours or Continuing Education Units in Florida Friendly Landscaping Practices from a continuing education organization approved by the County before each succeeding license renewal or bi-annually, whichever is shortest. Compliance with this requirement will be confirmed at the time of license renewal, or by an approved audit procedure.

(2) A list of required and approved courses or certifications for paragraph (1) above will be maintained by the Marion County Licensing Board.

(3) A course or certification may be added to or withdrawn from the approved list using an approved petition procedure.

B. Landscape maintenance professionals performing work for hire within the unincorporated areas of Marion County shall possess current GI-BMP Certification of Completion.

C. Any person providing services for hire regarding any aspect of landscape maintenance that includes the application of fertilizer or pesticide shall meet the applicable state and County licensing and certification requirements included herein.

Division 9 **Irrigation**

Sec. 6.9.1 Purpose and intent.

The purpose and intent of this division is to provide guidelines establishing minimum standards and criteria for the design, permitting, installation, and maintenance of irrigation systems to prevent the wasteful uses of water.

Sec. 6.9.2 Submittal requirements.

A. An irrigation plan shall be provided prior to issuance of a development order or building permit.

B. All irrigation systems, including temporary shall comply with the design standards included herein and shall be monitored for leaks and the adequate delivery of water.

C. An irrigation plan which includes the following items shall be submitted:

(1) Signature and seal of the authorized design professional is required, excluding those plans prepared by the owner of an owner occupied single-family residence or owner occupied duplex;

(2) Limits of areas to be irrigated;

(3) Table or chart which includes all components used within the system:

(a) Symbol legend

(b) Type of component, including brand and model

(c) Application rate of each emitter type

(d) Precipitation rate of each emitter type

(4) System performance table:

(a) Design pressure

(b) Operating pressures

(c) GPM of each zone

(5) Location of rain sensor and/or soil moisture sensor;

(6) Location of controller;

(7) Location of point-of-connection or well;

(8) Location of backflow prevention device;

(9) Location of all valves, mainlines, lateral lines, and emitters;

(10) Construction details as applicable to the design;

(11) Notes including installation instructions and County's contractor licensing requirements when a contractor is used;

(12) Notes regarding the close out and completion requirements; and

(13) Notes regarding maintenance, post-construction adjustments, and watering restriction.

Sec. 6.9.3 Irrigation Design Standards.

A. Irrigation systems shall be designed for the efficient application of water based on sound design principles and the use of available irrigation technology to apply only the amount of water necessary to meet landscape needs.

B. Irrigation design standards shall apply to the installation and use of new landscape irrigation systems, except for the following:

(1) Irrigation systems associated with bona fide agricultural operations.

(2) Irrigation systems at intensive recreational areas, excluding common areas and open areas at such facilities.

C. Water application limits for irrigation systems are as follows:

(1) The use of high volume irrigation is limited to:

(a) Turfgrass areas.

(b) Groundcovers that have a mature or maintained height no greater than one foot.

(c) Trees and shrubs that occurs incidental to turf irrigation, subject to approval by the County's Landscape Architect.

(2) A low volume irrigation area may be used in any landscape area.

(3) Efficient and water saving heads (rotating stream nozzles) may be used in any landscape area.

D. Irrigation systems shall use the following principles:

(1) Only apply the adequate irrigation for the proposed plant palette and soil conditions;

(2) Avoid the application of water to impervious areas;

(3) Minimize the application of water to established landscapes;

(4) Separate turf and landscaping zones;

(5) Use heads/emitters with matched precipitation rates within each zone;

(6) Properly space irrigation heads based on site and climate conditions;

(7) Use pressure regulating devices (at control valves or at each head/emitter);

(8) Use in-line or in-head check valves to prevent low head runoff where final site topography dictates the need of such devices;

(9) Use automatic irrigation controllers that have program flexibility with non-volatile memory with the capacity to preserve programs;

(10) Properly install, maintain, and operate technology that inhibits or interrupts operation of the system during periods of sufficient moisture per § 373.62 FS.

Sec. 6.9.4 Irrigation system permit.

A. An irrigation system permit is required for all new in-ground irrigation systems and for major modifications to existing in-ground irrigation systems. Major modifications shall include Increasing

flow capacity of the existing system by more than 25 percent.

B. Repairs and minor modifications shall not require a permit.

C. Irrigation permits for portions of irrigation systems which are generally installed with major site developments such as subdivisions and golf courses may be issued separately.

D. No part of this division mandates the installation of a permanent irrigation system. However, all landscaping required by this Code must be maintained in a living and healthy condition and meet the intent of Division 6.8.

E. A valid permit must be properly displayed at the job site prior to commencement of work. A permit is valid for a period of six months from date of its issuance. The County may at its discretion extend this time limit for any reasonable period of time.

F. A permit may be suspended or revoked by the County if any irrigation system installation is found in violation of the permit, Florida Statutes, FAC, this Code, any applicable County ordinance, or any of the following:

(1) Material misstatement or misrepresentation in the application for a permit;

(2) Failure to comply with the conditions set forth in the permit; and/or

(3) Failure to pay the required permit fee.

Sec. 6.9.5 Irrigation system installation.

A. Irrigation systems shall only be installed by installation professionals meeting the licensing requirements under Section 6.9.10, except those being installed by property owners on their own single-family residence or owner/occupied duplex.

B. Irrigation systems shall be constructed in accordance with the Florida Irrigation Society's (FIS) *Standards and Specifications for Turf and Landscape Irrigation Systems* as updated.

Sec. 6.9.6 Completion inspection requirements.

A. Irrigation installation professionals shall be accountable for the proper installation and compliance with the conditions of the irrigation permit and approved plans.

B. Upon completion of the installation, the contractor or owner shall request an inspection by the irrigation design professional. Prior to the inspection, the irrigation installation professional shall produce a clear and legible as-built diagram which accurately represents the irrigation system was installed. The diagram shall be presented and reviewed during the final inspection. The diagram may be a marked-up copy of the approved irrigation plan and shall include at a minimum:

(1) Locations of all mainlines and mainline valves;

(2) Locations of all remote control valves;

(3) Water demand per zone in GPM, and

(4) Total water demand per operating cycle.

C. The irrigation installation professional shall also provide to the owner:

(1) Irrigation system scheduling information;

(2) A copy of the irrigation controller owner's manual;

(3) Irrigation system maintenance schedule, which includes:

(a) Instructions for seasonal adjustments of controller and sensors.

(b) Instructions covering how and when to check for leaks.

(c) A schedule for checking for proper irrigation distribution coverage.

D. Within 60 days after installation the irrigation controller shall be adjusted to be set in accordance with the applicable irrigation schedule set forth in this Code.

E. Upon completion of the irrigation system installation and the acceptance of the as-built diagram and operational information, a Final Inspection and Landscape/Irrigation Release shall be signed and sealed by the irrigation design professional and submitted to the County's Landscape Architect.

Sec. 6.9.7 Certificate of Occupancy. When the irrigation system installation is part of a construction project, no certificate of occupancy shall be issued until:

A. A complete, self-certification checklist, as well as a clear and accurate as-built sketch, have been submitted and accepted by the County; and

B. The Final Inspection and Landscape/Irrigation Release has been received or the County has conducted and certified a final inspection.

Sec. 6.9.8 Irrigation system operation and maintenance.

A. An irrigation installation professional who installs or performs work on an automatic landscape irrigation system must test for the correct operation of each inhibiting or interrupting device or switch on that system. If such devices or switches are not installed in the system or are not in proper operating condition, the contractor must install new ones or repair the existing ones and confirm that each device or switch is in proper operating condition before completing other work on the system (§ 373.62 FS Water conservation).

B. All irrigation systems should be operated and maintained in accordance with the *Florida-Friendly Best Management Practices for Protection of Water Resources* by the Green Industries or the Florida Yards and Neighborhood program.

C. To maintain the original performance and design integrity of the irrigation system, repair of the equipment shall minimally be done with the originally specified materials or their equivalents.

D. Irrigation systems, including automatic rain sensor shutoff device, shall be certified by an irrigation system installation professional to be operating properly and in good repair at such time as the property may be resold.

Sec. 6.9.9 Landscape irrigation schedule.

A. The provisions of this section shall apply to each parcel within the unincorporated areas of Marion County, except that unincorporated area lying within The Villages of Marion, FQD. Landscape irrigation within the Villages of Marion, FQD shall comply with the landscape irrigation rules and water shortage rules of the SWFWMD, pursuant to the interagency agreement between the SJRWMD and SWFWMD, dated May 19, 2009.

B. When Daylight Savings Time is in effect, landscape irrigation shall occur only in accordance with the following irrigation schedule:

(1) Residential landscape irrigation at odd numbered addresses may only occur on Wednesday and Saturday and must not occur between 10:00 a.m. and 4:00 p.m. daily.

(2) Residential landscape irrigation at even numbered addresses or no address may only occur on Thursday and Sunday and must not occur between 10:00 a.m. and 4:00 p.m. daily.

(3) Nonresidential landscape irrigation may occur only on Tuesday and Friday and shall not occur between 10:00 a.m. and 4:00 p.m.; and

(4) No more than 0.75 inches of water may be applied per irrigation zone on each day that irrigation occurs, and in no event shall irrigation occur for more than one hour per irrigation zone on each day that irrigation occurs.

C. When Eastern Standard Time is in effect, landscape irrigation shall occur only in accordance with the following irrigation schedule:

(1) Residential landscape irrigation at odd numbered addresses may occur only on Saturday and shall not occur between 10:00 a.m. and 4:00 p.m.; and

(2) Residential landscape irrigation at even numbered addresses or no address may occur only on Sunday and shall not occur between 10:00 a.m. and 4:00 p.m.; and

(3) Nonresidential landscape irrigation may occur only on Tuesday and shall not occur between 10:00 a.m. and 4:00 p.m.; and

(4) No more than 0.75 inches of water may be applied per irrigation zone on each day that irrigation occurs, and in no event shall irrigation occur for more than one hour per irrigation zone on each day that irrigation occurs.

D. Exceptions to landscape irrigation schedules listed above include:

(1) Irrigation using a micro-spray, micro-jet, drip or bubbler irrigation system is allowed anytime.

(2) Irrigation of new landscape is allowed at any time of day on any day for the initial 30 days and every other day for the next 30 days for a total of one 60 day period, provided that the irrigation is limited to the minimum amount necessary for such landscape establishment.

(3) Watering in of chemicals, including insecticides, pesticides, fertilizers, fungicides, and herbicides when required by law, the manufacturer, or best management practices is allowed anytime within 24 hours of application. Watering in of chemicals shall not exceed ¼ inches of water per application except as otherwise required by law, the manufacturer, or best management practices.

(4) Irrigation systems may be operated anytime for maintenance and repair purposes not to exceed 20 minutes per hour per zone.

(5) Irrigation using a hand-held hose equipped with an automatic shut-off nozzle is allowed anytime. The use of a hose-end sprinkler is not considered hand watering.

(6) Discharge of water from a water-to-air air-conditioning unit or other water-dependent cooling system is not limited.

(7) The use of water from a reclaimed water system is allowed anytime. For the purpose of this paragraph, a reclaimed water system includes systems in which the primary source is reclaimed water, which may or may not be supplemented from another source during peak demand periods.

(8) The use of recycled water from wet detention treatment ponds for irrigation is allowed anytime provided the ponds are not augmented from any ground or off-site surface water, or public supply sources.

Sec. 6.9.10 Licensing and Certification.

A. Irrigation Professionals

(1) Irrigation Design Professionals shall be design professional as licensed by the State of Florida to provide such professional services.

(2) Irrigation Installation and Maintenance Professionals shall include Plumbing Contractors and Irrigation Specialty Contractors licensed by the State of Florida, and Irrigation Contractors licensed by Marion County.

(3) Irrigation Installation and Maintenance Professionals, as defined by this section, shall be exempt from the separate licensing requirements for Irrigation Design Professionals when designing irrigation systems, or portions of irrigation systems, as part of a “design/build” contract to install or maintain the same system, if that system complies with all applicable requirements of this ordinance and is permitted by Marion County.

B. Training.

(1) Unless otherwise subject by Florida Statutes to certain continuing education requirements, contractors licensed to perform work under this section shall annually complete a minimum of

four professional development hours (PDH) in Florida-Friendly Landscaping and Irrigation practices from a continuing education organization designated by the Marion County Licensing Board.

(2) Marion County shall confirm compliance with these PDH requirements at the time of license renewal, or by an approved audit procedure.

Division 10 Karst Topography and High Recharge Areas

Sec. 6.10.1 Purpose and Intent.

Marion County is uniquely situated in a geologic area featuring limestone and rock characteristics identified as karst, promoting the quick and rapid movement of water between the surface and the aquifer. As the aquifer is the vital source of Marion County's potable water, as well as much of the State of Florida, its protection and preservation is essential.

Sec. 6.10.2 General Requirements.

A. An application for any new development or expansion of existing development, located within a high recharge or karst sensitive area as designated by the appropriate water management district or Marion County maps, shall submit an analysis of site conditions in sufficient detail to define hydrologic and geologic conditions which may guide mining, land development, or construction activities on the proposed site.

B. An applicant for any new development or expansion of existing development shall depict karst features on the project site and off-site within 200 feet of the project boundary.

Sec. 6.10.3 Additional Submittal Requirements.

A. When providing a submittal for the purposes of demonstrating karst feature and high recharge area protection, the following minimal information shall be included:

(1) Potentiometric surface map;

(2) Geologic bulletins and papers specific to the project area;

(3) Geotechnical and hydrogeologic reports or studies, including test borings. The total number of borings shall be determined by the professional responsible for signing and sealing the study;

(4) Assessment of sinkhole, cave, lineament, escarpment, solution pipe and other known and potential karst features; and

(5) Engineering analysis and recommendations, including:

(a) Evaluation of planned site area; and

(b) Options and recommendations including but not limited to:

1. Remediation or buffering;

2. Minimization of impervious surfaces;

3. Potential for innovative stormwater collection and protection measures including pre-treatment and shallow drainage retention areas; and

4. Alternatives to stormwater retention basins when soil cover is inadequate to protect the Floridan aquifer.

Sec. 6.10.4 No untreated stormwater shall be directed into a karst feature.

Sec. 6.10.5 Development restrictions in high recharge and karst sensitive areas are as follows:

A. Businesses or industries which produce, use, or store hazardous materials listed in Section 12.7 shall prepare the proposed development plans in conformance with the requirements of Section 12.8.3, the Florida Administrative Code, and the requirements of this division.

B. Non-residential uses shall be set back 200 feet from a sinkhole, unless the sinkhole is remediated or alternative design addressing water quality issues is approved.

Sec. 6.10.6 Karst Feature Remediation.

If remediation of a karst feature is proposed, the application for development must include a remediation plan containing all details for the remediation activity. A final certification documenting that the karst feature was successfully remediated in accordance with the plan shall be submitted with the final certifications for the development. The remediation plan and final certification must be signed and sealed by a Professional Engineer or Professional Geologist. Karst features remediated in compliance with this paragraph shall not be required to meet the buffer requirements of this division.

Sec. 6.10.7 Karst Feature Conservation.

All new development and expansion of existing development shall provide and maintain a permanent vegetative buffer around any sinkhole, cave, lineament, escarpment, solution pipe, and other known karst features that are not remediated. The buffer shall be entirely within a Conservation Easement. The Conservation Easement shall be clearly delineated, labeled, and described on the applicable plan, and follow the provisions in the Habitat Protection section of this Code.

A. Buffer Width. The minimum width of the required karst buffer shall be 150 feet for karst features with a direct connection to the aquifer and 75 feet for karst features with no direct connection to the aquifer, as measured from the outermost closed contour or edge of the escarpment, as applicable, but no greater in width than the contributing watershed. These minimum buffer widths may be reduced if the applicant demonstrates either of the following:

(1) A narrower buffer can be calculated using the design methodology for calculating buffer width based on infiltration, as set forth in the *Applicant's Handbook for Regulation of Stormwater Management Systems*, SJRWMD 2005, as amended; or

(2) The lot of record is too small to accommodate permitted development in compliance with the minimum width, in which case the applicant shall, as an alternative, design and construct a stormwater control feature such as, but not limited to, a vegetated swale and/or berm that effectively prevents drainage to the karst feature.

B. Design Buffer Use. The karst buffer shall be maintained in permanent vegetative cover. In addition, the following shall be prohibited within the buffer:

(1) Buildings, pavement and other impervious surfaces, except sidewalks five feet or less wide may be permitted;

(2) Septic tank drainfields and any form of domestic wastewater disposal;

(3) Drainage retention areas; and

(4) Use of irrigation, fertilizers, and pesticides.

C. Native Vegetation. The native vegetation shall be restored, preserved, and maintained to provide a buffer around sinkholes in excess of 50 feet in diameter.

Division 11 Traffic Management

Sec. 6.11.1 Purpose and intent.

This division is necessitated by the traffic impact of new developments and only applies to new or modified improvements. The County anticipates controlling the impacts and maximizing the public transportation system through engineered traffic management.

Sec. 6.11.2 Functional Classification.

For the purpose of development, operation, and maintenance, roads are classified as Arterial, Collector, or Local based on function as noted below.

(1) Arterial roads are routes that provide service which is relatively continuous and of relatively high traffic volume, long average trip length, high operating speed, and high mobility importance.

(2) Collector roads are routes that provide service which is of relatively moderate average traffic volume, moderately average trip length, and moderately average operating speed. This route also collects and distributes traffic between local roads or arterial roads and serves as a linkage between land access and mobility needs.

(3) Major local roads (within large subdivisions or residential areas) are routes that connect neighborhoods with the arterial and collector road network and provide interconnection between neighborhoods. Major local roads (in rural areas) are routes that connect smaller local roads with the arterial and collector road network.

(4) Minor local roads include all roads outside of subdivisions that are not classified as arterial, collector, or major local.

(5) Subdivision local roads are streets located within subdivisions or neighborhoods that primarily provide access to abutting properties or properties along interconnected neighborhood streets. Generally, these streets will include cul-de-sacs, short blocks of a grid network, or other interconnected neighborhood streets.

A map showing all road classifications is available at the Office of the County Engineer.

Sec. 6.11.3 Traffic Impact Analysis.

A. A Traffic Impact Analysis is required to determine necessary mitigation and improvements to accommodate the proposed development. The design year shall include a minimum growth rate and in accordance with the established guidelines. For the purpose of determining what level of study must be completed, the following thresholds have been established.

(1) A Traffic Statement is required for projects generating fewer than 50 peak hour trips.

(2) A Traffic Assessment is required for projects generating between 50 and 99 peak hour trips. Unless the project has a four percent or more impact (percent project traffic to adopted LOS volume) on a roadway that has an existing volume/capacity (v/c) ratio of 0.80 or more, in which case a Traffic Study is required.

(3) A Traffic Study is required for projects generating 100 or more peak hour trips. For projects where all impacted roadways are below 0.50 v/c a Traffic Assessment is all that is required with the exception of those projects increasing the v/c ratio on an impacted roadway by 20 percent or more.

B. The guidelines for each of these analyses can be found at Office of the County Engineer.

Sec. 6.11.4 Access Management.

A. All developments shall be responsible for ensuring and providing coordinated access to, from, and between the proposed development and the surrounding lands to ensure that adequate and managed access is available to the development project and the public. Residential development with more than 50 developable lots shall have at minimum two access points.

B. Cross Access (Parallel Access).

(1) Cross access is required to reduce the use of the public street system, provide for movement between adjacent and complementary land uses, limit access to Arterial and Collector roads, and minimize full median openings. Cross access shall be shown on the plans and shall be established through a public easement.

(2) Cross access shall be provided and constructed for all commercial, industrial, and multi-family residential development on arterial and collector roads unless it is determined by the County Engineer to not be practical or reasonable due to adjacent features, specific type of development,

or the potential development of the adjacent property.

(3) Refer to Article 7 for construction details.

C. Access to adjacent lands.

(1) Access to adjacent unplatted land or development shall be provided by the continuation of the Major Local rights-of-way centered on section or quarter section lines, when possible, to the subdivision boundary.

(2) Access to adjacent platted lands shall be provided at selected points, as approved by the County, by extending an existing or proposed street to the subdivision boundary.

(3) Gated subdivisions or internal residential pods served by Major Local roads are exempt from the requirements in (1) and (2) above.

D. Access to adjacent commercial development.

Single family residential subdivisions fronting on collector or arterial roads shall provide for interconnection to adjacent non-residential development.

E. No fence, wall, hedge, shrub, structure or other obstruction to vision, between a height of two and one-half feet and eight feet above the center line grades of the intersecting streets, shall be erected, placed or maintained within a triangle formed by the point of intersection of-right-of-way lines abutting a street and/or railroad right-of-way and the points located along the-right-of-way lines (use distance in table below) from the point of intersection. Refer to details in Article 7.

Table 6.11-1 Sight Triangles

USE	MINIMUM DISTANCE FROM POINT OF INTERSECTION
Residential Areas	25 Feet
Commercial Areas	30 Feet
Industrial Areas	40 Feet

Sec. 6.11.5 Driveway Access.

A. Driveways provide the physical transition between a site and the abutting roadway. Driveways should be located and designed to minimize impacts on traffic while providing safe entry and exit from the development served. The location and design of the connection must take into account characteristics of the roadway, the site, and the potential users.

B. General Driveway Requirements.

(1) Each buildable lot, parcel, or tract is entitled to a driveway unless cross access is available.

(2) Adjacent properties under the same ownership shall be considered as a single property for application of driveway spacing or for driveway permits. Applicants may include a request that properties be considered individually for permitting purposes but the request must be specifically included in the permit and a sketch included that details the lot configurations and driveway placement.

(3) Driveway location and minimum spacing shall be consistent with traffic safety standards. If standards cannot be achieved, the County Engineer, or designee, can review and approve on a case-by-case basis.

(4) Driveway width shall be subject to internal and external traffic flow considerations. The driveway width considerations include, but are not limited to, the number of lanes, the driveway geometrics, internal obstructions, and traffic safety.

(5) Concrete mitered end sections are required for culverts when used for driveways accessing a roadway with posted speeds of 40 mph or greater.

C. Commercial Driveway Requirements.

(1) The minimum allowed distance between a commercial driveway and the nearest intersecting roadway or driveway shall be as shown in Table 6.11-2.

Table 6.11-2 Minimum Commercial Driveway Spacing

Speed Limit (MPH)	Spacing* (Feet)
35 or less	245
36-45	440
Over 45	660

*on the same side of the road as the proposed driveway

(2) All driveways on corner parcels must access the lower classified road unless approved by the County Engineer. Exceptions to the distances listed in Table 6.11-2 may be allowed if constraints exist that makes it impractical to meet those requirements but in no case shall that distance be less than what is shown in Table 6.11-3.

Table 6.11-3 Minimum Commercial Driveway Spacing at Corner with Constraint

Median Restriction	Position	Access Allowed	Minimum Spacing (Feet)
Yes	Approaching Intersection	Right In/Out	115
Yes	Approaching Intersection	Right In Only	75
Yes	Departing Intersection	Right In/Out	230
Yes	Departing Intersection	Right Out Only	100
No	Approaching Intersection	Full Access	230
No	Approaching Intersection	Right In Only	100
No	Departing Intersection	Full Access	230
No	Departing Intersection	Right Out Only	100

(3) Driveways on the opposite side of the road from the proposed driveway shall be shown on the plan for coordination purposes.

(4) All commercial driveway access shall meet FDOT sight distance requirements. A note is required on Improvement Plans and Major Site Plans stating that “sight distance at driveways complies with FDOT requirements.”

(5) The length of commercial driveways shall be designed to provide for an uninterrupted traffic flow

on the public street. The driveway length shall be subject to the anticipated required stacking length of entering and exiting vehicles during the peak period in accordance with FDOT.

(6) Commercial driveways shall be at minimum 24 feet wide within the right-of-way and have a 25 foot radius. The Office of the County Engineer may require wider driveway and radius for commercial properties with heavy truck traffic. Equivalent flare will be allowed if the projected traffic volume for the driveway is less than 600 trips per day and curb and gutter exist.

(7) The maximum allowed commercial driveway grade is 10 percent. The maximum algebraic difference between two different grades is 12 percent.

D. Residential Driveway Requirements.

(1) All developments with residential uses shall prohibit direct access onto a Major Local, Collector, or Arterial roadway. Individual lots shall be accessed through the use of an internal roadway network.

(2) Driveways shall not access Major Local, Collector, or Arterial roads if alternate access is available.

(3) Multi-family sites require adequate vehicular maneuvering area off of the right-of-way to prohibit backing out of driveway.

(4) No driveway shall be located within the sight triangle at corners. Refer to Section 5.5.16. Driveway to corner lots shall be located no closer than the lesser of half of the lot width or 50 feet from the end of the radius. Driveway restriction areas shall be graphically shown on Final Plats for corner lots in compliance with this section.

(5) All residential driveways shall make every effort possible to meet FDOT sight distance requirements. This may include relocating driveway, removing structures such as fences, and removing vegetation from the driveway owner's parcel.

(6) The driveway radius shall be a minimum of 5' for Subdivision Local or Minor Local road and a minimum of 10' on a Major Local, Collector, or Arterial road. An equivalent flare to the specified radius will be acceptable.

(7) The maximum allowed residential driveway grade is 28 percent. The maximum algebraic difference between two different grades is 12 percent.

Sec. 6.11.6 Construction Access/Route.

A. For any phased development, or development within an existing residential area, a plan for the construction access and construction route to the nearest Collector or Arterial road shall be approved by the County prior to construction.

B. Any activity excavating and removing material from a site shall include a designated access route and be approved by the County prior to utilization.

Sec. 6.11.7 Loading Areas.

The arrangement of truck loading and unloading facilities for commercial development shall be such that in the process of loading or unloading, no truck shall block or impact the flow of traffic on any adjacent street. The engineer shall state or show on the plans the proposed loading and unloading arrangement.

Sec. 6.11.8 Parking Requirements.

A. Alternatives to these parking standards may be accepted by the Planning/Zoning Manager, if the applicant demonstrates that such standards better reflect local and project conditions.

B. Number of Spaces.

(1) Parking spaces for residential and non-residential developments shall be provided consistent with tables 6.11-4 and 6.11-5.

(2) A one-car garage or carport and driveway combination shall count as two off-street parking spaces provided the driveway measures a minimum of 25' in length between the face of the garage or carport door and the sidewalk, or 30' to the curb line.

(3) A two-car garage or carport and driveway combination shall count as four off-street parking spaces, provided the minimum width of the driveway is 20' and its minimum length is as specified above for a one-car garage or carport.

(4) For mixed-use developments, a shared parking approach to the provision of off-street parking shall be permitted.

(5) Any change of use on a site to a use which requires more parking spaces than are provided on the site shall require submission of an appropriate site plan showing the required parking spaces.

Table 6.11-4 Minimum Off-Street Parking Requirements for Residential Land Use

Housing Unit Type and Size	Off-Street Parking Requirements
Single-Family Detached	
up to 3 Bedrooms	2.0
4 or 5 Bedrooms	3.0
Multi-family and Manufactured Home	
1 Bedroom	1.5
2 or 3 Bedrooms	2.0

Table 6.11-5 Minimum Off-Street Parking Requirements for Nonresidential Land Use

Nonresidential Land Use	Required Off-Street Parking Spaces Per Indicated Area*	
Bar	1	Per 4 seats
Bowling alley	3	Per lane
Car wash	5	Per washing lane
Church/Place of Worship	1	Per 3 seats
Elementary or Middle School	2	Per classroom; but not less than 1 per teacher & staff
Fast-food establishments	1	Per 75 sq. ft. GFA
Fiduciary institutions	1	Per 300 sq. ft. GFA
High School	5.5	Per 30 students; but not less than 1 per teacher & staff
Hotel	0.5	Per guest room, plus
	10	Per 1,000 sq. ft. GFA non-room area
Housing for handicapped, elderly, ACLF,	1	Per 3 beds, plus

nursing homes, or similar uses	0.5	Per employee
Industrial	1	Per 675 sq. ft. GFA
Library	1	Per 300 sq. ft. GFA
Manufacturing	1	Per 675 sq. ft. GFA
Medical Center	1	Per 250 sq. ft. GFA
Neighborhood or convenience center under 100,000 sq. ft. GLA	4	Per 1000 sq. ft. GLA
Nightclub	1	Per 3 seats
Offices	2.5	Per 1000 sq. ft. GFA
Research	1	Per 1000 sq. ft. GLA
Restaurant	15	Per 1000 sq. ft. GFA
Retail store	1	Per 300 sq. ft. GFA
Service station	3	Per bay & work area
Shopping center	3.5	Per 1000 sq. ft. GLA
Storage areas	1	Per 2000 sq. ft. GLA
Theater	1	Per 4 seats
Warehouse	1	Per 3000 sq. ft. GFA

Parking requirements for land use types that are not listed shall be based on other documentation approved by the County such as the ITE Parking Generation Manual or American Planning Association Publications.

Table 6.11-6 Minimum Accessible Parking Space Requirements

Total Number of Parking Spaces	Accessible Parking Spaces
1 to 25	1
26 to 50	2
51 to 75	3
76 to 100	4
101 to 150	5
151 to 200	6
201 to 300	7
301 to 400	8
401 to 500	9
501 to 1000	2 percent of total
1001 and over	20, plus 1 for each 100, or fraction thereof, over 1000

C. Each off-street parking space shall measure, at a minimum, 9’ wide by 18’ long. Pavement markings in parking lots shall be a minimum of 4” wide.

D. Disabled permit parking spaces shall be provided in compliance with the requirements of the

Florida Building Code, American with Disabilities Act, and the FDOT Design Standards. A detail or label shall be provided on plans indicating that these spaces will be striped in accordance with FDOT index 17346.

E. All off-street parking areas shall be paved for all developments, except as listed below. The following uses may use grass parking except for employee and disabled permit parking spaces which must be paved. The perimeter of a grass parking lot shall be delineated with railroad ties, wheel stops, or other means as may be approved by the County Engineer, or designee.

(1) Churches or other places of worship

(2) Private clubs or lodges

(3) Community centers

(4) New and used motor vehicle sales and leasing

(5) Trucks and commercial tractor/trailer units

(6) Sales and leasing of new and used manufactured homes

(7) Sales of new and used farm tractors or equipment

(8) New or used construction equipment

(9) Government buildings

(10) Schools

(11) Athletic facilities

(12) Park facilities

F. Access to parking areas shall be designed so as not to obstruct free flow of traffic. There shall be adequate provision for ingress to and egress from all parking spaces to ensure ease of mobility, ample clearance, and safety of vehicles and pedestrians.

G. Developer shall account for a two foot vehicle overhang where sidewalks are located in front of a parking space. Wheel stops can be used to prevent the vehicle overhang over the sidewalk and maintain the intended walkway width.

H. Parking areas shall be suitably landscaped in accordance with Section 8.2.10.i.(5).

I. The width of all aisles providing direct access to individual parking stalls shall be in accordance with Table 6.11-7.

Table 6.11-7 Minimum Aisle Width Requirements

Parking Angle (degrees)	Aisle Width, One-way Traffic (feet)	Aisle Width, Two-way Traffic (feet)
30	12	22
45	13	22
60	18	22
90	24	24

Sec. 6.11.9 Traffic Control Devices.

A. Traffic Signals

(1) The installation of a traffic signal requires a signal warrant analysis to be performed. The County's Traffic Engineer shall determine if the signal warrant analysis justifies the need for a traffic signal. Traffic signals warranted due to the development shall be installed and paid for by the developer.

(2) Justification must be provided for the left turn treatment, phases, deceleration lane lengths and timings proposed.

(3) In addition to the plan requirements listed below, shop drawings with FDOT approved materials and a maintenance agreement must be provided and approved.

(4) Illuminated Street Name signs shall be required at all signalized intersections.

(5) A box-span configuration is required if strain poles are used.

(6) Traffic signal plans shall be 11”X 17” and shall include the following.

(a) A Key sheet including the name of the intersecting roads, an index, a location map, a list of the utility companies that exist in the location of the signal, and the posted speeds of the approaching roadways.

(b) A Tabulation of Quantities sheet that lists the item numbers, description and quantity of materials and equipment, listed in numerical order. Pay item notes and general notes that refer to item numbers shall be shown on this sheet.

(c) A General Notes sheet including all general notes, related to the specific signal, as required by the Traffic Section of the Marion County Office of the County Engineer. Contact the Office of the County Engineer for the current required general notes.

(d) A Plan sheet at a scale large enough to show all details clearly and legibly. The recommended scale is 1” = 40’ or 1” = 50’. The plan sheet shall include existing and proposed:

1. Edge of pavement
2. Street names
3. Drainage structures including curb and gutter and drainage inlets
4. Sidewalks and right-of-way lines
5. Pavement markings
6. Signal heads with directional arrows and movements (movement 2 and 6 shall be the major streets)
7. Detection devices such as video detection with detection field or loop detection with conduit locations
8. Pull boxes
9. Control cabinet location
10. Signal poles and span wire
11. ATMS Equipment (if applicable)
12. North arrow and scale
13. Phasing Diagram
14. Controller timings using calculated optimum timings and clearance intervals meeting FDOT requirements
15. Sign detail with dimensions of letters and sign
16. Signal head details
17. Pedestrian head details
18. FDOT pay item numbers for all equipment

(e) A structural analysis with soil boring data signed and sealed by an Engineer.

B. Traffic Signs.

(1) The Developer's Project Engineer shall design the project plans providing for installation of signs as per the requirements of this Code and the MUTCD.

(2) Street Name signs at every roadway intersection are required.

(3) Stop signs and stop bars are required on the minor street at all intersections. Yield signs may be permitted if approved by the County Traffic Engineer.

(4) Speed Limit signs are required at subdivision entrance roads and all locations where speed zones change. The speed limit shall be determined by the Project Engineer in accordance with FDOT policies. A speed limit resolution is required when the posted speed differs from the statutory speed.

(5) Curve and Advisory Speed signs shall be installed as recommended by MUTCD.

(6) Dead End signs shall be erected at the beginning intersection of all discontinuous roads. No Outlet signs shall be erected at the entrance intersection when this intersection is the only outlet from a street network.

(7) Delineators shall be installed at the ends of all cross drain culverts in accordance with construction details in Appendix B.

C. Pavement Markings.

Pavement markings shall be installed in accordance with the MUTCD and as approved by the County Engineer. Stop bars shall be required at every intersection approach where stop signs are located. A minimum of 200 feet of double solid yellow striping extending back from the stop bar is required on all paved roads or entrances that intersect with an Arterial, Collector, or Major Local road. All pavement markings in County right-of-way shall be thermoplastic, except bicycle lane markings which shall be paint. All centerline, lane line, and edge-line striping shall be six inches wide on Arterial, Collector, and Major Local roads; and a minimum of four inches on other classified roads. For commercial driveways, a Stop sign and stop bar shall be provided when the projected vehicle traffic is 25 vehicles per hour or greater; a four inch wide centerline pavement marking shall be provided when the projected traffic is 600 vehicles per day or greater.

Division 12 Transportation Facilities

Sec. 6.12.1 Purpose and Intent.

All improvements that will be located within the public or private right-of-way or easement, such as new roads, new signals, auxiliary turn lanes, sidewalks, trails, golf cart paths, pedestrian paths and other public transportation facilities, shall be designed to the “FDOT Greenbook” and “FDOT Design Standard Index” unless noted differently herein.

Sec. 6.12.2 Right-of-Way.

A. When a subdivision is being platted, right-of-way shall be dedicated for internal streets and adjacent roads to provide the minimum width specified in the table below.

B. For Major Site Plans, when improvements related to the project are in the right-of-way, right-of-way shall be dedicated along adjacent roads to provide the minimum width specified in the table below. The existing centerline of the adjacent road shall be the reference line used to determine the needed right-of-way on each side of said centerline. This right-of-way can be provided by dedication or easement. The dedication provided herein shall only be required to the extent that such dedication is mandated by the project demands.

C. In the urban area, right-of-way shall also be dedicated along section and quarter section lines, or as directed by the DRC, if future roadway corridors are contemplated in the Comprehensive Plan and/or the Transportation Planning Organization (TPO) long range plan.

D. If the required right-of-way is not directly necessitated by the proposed development to mitigate traffic impact, in accordance with the project’s traffic impact analysis, the owner may be

compensated based on the fair market value if acceptable to both the owner and the County. Compensation may be in the form of impact fee credits and is subject to the approval of the Board.

Table 6.12-1 Minimum right-of-way widths

Road Classification	Width
Subdivision Local (private)	50’ + 5’ ROW easement each side
Subdivision Local (public)	60’
Minor Local	80’
Major Local	100’
Collector, Arterial (urban)	120’
Collector, Arterial (rural 2-lane undivided)	120’
Collector, Arterial (semi-urban)	150’
Collector, Arterial (rural divided)	180’

Sec. 6.12.3 Typical Sections.

A. All roadway improvements shall meet the minimum requirements given in the table below and be in concurrence with the additional tables in this division. Typical sections are detailed cross section depictions of the highway's principal elements that are standard between certain station or milepost limits. These sections are the basis for construction details and information shown on the various plan sheets.

Table 6.12-2 Typical Section Minimum Requirements

Street Design Type	Lane Width	Median Width	Bike Lane	Shoulders		Sidewalks (if required)
				Paved	Grass	
2-lane urban subdivision local	10'	-	-	-	-	5’
2-lane rural subdivision local	10’	-	-	-	4’	5’
2-lane rural minor local	11'	-	-	-	6’	-
2-lane urban major local	12'	-	4'	-	-	5’
2-lane rural major local	12’	-	-	2'	6’	5’
2-lane urban collector/arterial	12'	40’	4'	2’*-	6’*	5’
2-lane rural collector/arterial (undivided)	12'	-	-	2’	6’	-
2-lane rural collector/arterial (divided)	12'	56’	4'	-	4’	-
				2’*	6’*	
4-lane urban collector/arterial	12'	20’	4’	-	-	5’
4-lane semi-urban collector/arterial	12'	22’	4'	2’*	4’	5’
4-lane rural collector/arterial	12'	32’	4'	-	4’	-
				2’*	6’*	

Notes:
1) This table applies for new construction. Maintenance and rehabilitation projects shall attempt to satisfy these requirements as deemed practical.
2) Refer to details in Article 7 to review the Typical Sections.
3) A dash (-) indicates the element is not required.
4) Sidewalks shall be 6' wide if adjacent to the back of the curb.
* Median Shoulder.

B. Typical sections shall show typical conditions only. Existing elements that are to be incorporated into the highway's final section are depicted in conjunction with the proposed elements.

C. Typical section stationing shall cover the entire project. Transitions from one typical to another shall be included in the stationing of one or the other typical section.

D. Typical sections for all projects shall include the following data:

(1) Cross slopes of roadway pavement, shoulder surfaces, and sidewalks shall be expressed as a decimal part of a foot vertical per foot horizontal. These cross slopes shall be rounded to two decimal places. Outer slopes shall be shown by ratio, vertical to horizontal.

(2) Feathering details and/or notes shall be shown when resurfacing without milling in urban curb and gutter sections as specified or when milling depth is less than the overlay thickness.

(3) Profile grade point shall be identified when applicable.

(4) Pavement construction shall be described in a clear, precise manner by indicating the LBR requirement and the thickness of the subgrade stabilization, subbase or base, as well as thickness for structural course, friction course and shoulder pavement. Use 4 inches for both base extension on rural sections and for stabilization extension on curbed sections. Pavement structure information shall be obtained from the approved pavement design and shall be described in the order of construction, i.e. starting with bottom layer and ending with friction course. Show pavement thickness descriptions for top, leveling, structural, and friction courses in inches (and fractions of an inch). The thickness shown should be to the nearest ½" (except for FC-5 which is a standard ¾").

(5) Limits of grassing.

(6) Sidewalk location and width.

(7) Curb and gutter location and type.

(8) Limits of clearing and grubbing, where applicable.

(9) Right-of-way and/or easements, where applicable.

(10) For widening projects, the existing pavement width shall be shown as a +/- dimension, and the base widening width shall be shown with an asterisk. For typical sections with varying dimensions, the dimensions shall be clearly indicated on the plan-profile sheets.

(11) Shoulder treatment shall be identified.

Sec. 6.12.4 Plan and Profile.

A. The roadway plan sheet shows the project's complete horizontal alignment. The plan-profile sheet shows the project's complete horizontal and vertical alignments. Various roadway elements such as pavement width, medians, paved shoulders, curbs, drainage elements, tapers, turn provisions, and intersecting roadways, are also shown on these sheets.

B. Plotting should typically be done at a horizontal scale of 1" = 50'.

C. The baseline survey and/or centerline of construction should be centered in the plan portion of the sheet, with stationing running from left to right. For resurfacing projects, simple projects, or

sections of a project without a profile view, "stacking" multiple plans on one sheet is generally permitted if clarity and legibility are maintained. PC and PT points of horizontal curves shall be indicated.

D. All existing topography shall be shown, including but not limited to existing roads, streets, drives, buildings, underground and overhead utilities, walls, curbs, pavements, fences, railroads, bridges, drainage structures and similar items shall be plotted and labeled. Streams, ponds, lakes, wooded areas, ditches and all other physical features shall also be shown.

E. Proposed construction and project limits shall be indicated in the plans.

F. Plan Layout

(1) Right-of-way lines shall be shown.

(2) At locations along the alignment where traveled way dimensions change, or begin to change, the station and dimensions of the traveled way shall be shown.

(3) Curb, curb and gutter, traffic separators, sidewalks, curb ramps, retaining walls, driveways, etc. shall be shown.

(4) Stations of return points shall be shown in tabular form or shown on the plan, unless shown on an intersection detail sheet. Offsets shall also be shown, if not governed by a typical.

(5) Station of end of curb and gutter at side street intersections (when end is not at a return point) shall be shown with proposed gutter grade elevation of these points.

(6) Limits of pavement and grading at side street intersections shall be indicated.

G. Profile Layout

(1) The horizontal scale for the profile portion of the sheet shall be the same as that used for the plan portion. Station limits of the profile shall correspond to those of the plan portion of each sheet. Station numbers shall be placed across the bottom of the sheet. Intervals for profile stations shall be the same as those in the plan view.

(2) A general guideline is the vertical scale should be 10% of the horizontal grid. Elevation datum shall be shown.

(3) The existing ground line profile shall be shown and labeled. Existing ground line elevations shall be noted vertically, just above the station numbers at each end of the sheet only.

(4) All high water elevations affecting base clearance or roadway grades shall be shown and labeled.

(5) Benchmark data shall normally be given just below the upper margin of the profile portion.

H. Utilities, including drainage, shall be provided as follows:

(1) All existing and proposed utilities shall be shown on the plan and labeled properly.

(2) Proposed stormwater systems, water and sewer lines, and gas lines shall be shown on the profile with invert elevations at every inlet or manhole or at top of pipe elevations every 500' intervals, as appropriate.

(3) When using stationing, all design features and utilities shall be referenced with station and offset information.

Sec. 6.12.5 Cross Sections.

A. The interval selected for showing sections on the cross section sheet will vary according to project specific factors. For new construction and reconstruction, the normal interval for cross sections is 100' and at all utility, including drainage, crossings. For new subdivision construction projects, at the discretion of the County Engineer, or designee, the number of required cross sections may be reduced or eliminated when sufficient construction information meeting the intent of this Code is shown on the plan and profile.

B. Cross sections shall depict the existing ground conditions, including all manmade features, as sections perpendicular to the respective stations along the survey baseline or construction centerline. The proposed cross-sectional outline of the new facility with all its functional elements shall also be shown on cross sections. The existing and proposed elevation at the centerline shall be noted. The station number of the section shall be indicated.

C. Existing parallel underground utilities which lie within the horizontal limits of the project shall be shown. Utilities that have been verified should be labeled. Small distribution or service lines need not be shown.

D. The proposed roadway template and the proposed profile grade elevation shall be shown.

E. The right-of-way and construction limits shall be shown for each cross section.

F. The begin and end stations for project, construction, exceptions, bridge/bridge culvert and the toe of slope under the bridge shall be shown. The beginning and ending earthwork stations shall be shown.

Sec. 6.12.6 Roadway flooding level of service

A. Subdivision Local and Minor Local Roads. Flooding due to the 25-year storm design high water level shall be below one-half of the travel lane. For internal flood evacuation routes, flooding due to the 100-year storm design high water level shall be below one-half of the travel lane. Further restrictions may be imposed by the County Engineer, or designee, for flood prone areas.

B. Arterial, Collector, and Major Local Roads. All roads shall be designed to be above the 100-year storm design high water level for that basin. Flooding due to this event shall not encroach into the travel lane.

Sec. 6.12.7 Pavement Sections

All roadway improvements shall meet the minimum requirements given in the table below.

Table 6.12-3 Minimum Pavement Design

Road Classification	Pavement (Type S or SP) as approved by the project engineer	Limerock Base (LBR 100)	Stabilized Subgrade (LBR 40)	Structural Number
Subdivision Local	1.25"	8"	12"	2.95
Minor Local	1.50"	10"	12"	3.42
Major Local	1.50"	10"	12"	3.42
Collector*	2.50"	10"	12"	3.86
Arterial*	3.50”	10”	12”	4.30

* Pavement design shall be in accordance with FDOT.

Sec. 6.12.8 Soil Data.

Soil test borings are required for all roadway improvements as indicated below. If it is determined that an organic or plastic material must be removed below the finished grading template, the lower limits of removal of organic or plastic material shall be shown to determine the area and volume of subsoil excavation.

(1) Auger boring depth shall be a minimum of four feet below proposed finish grade or six feet below natural grade, whichever is the deepest.

(2) Spacing of borings shall be at a maximum interval of 600 feet along the roadway centerline.

(3) A minimum of two soil test borings per roadway, taken within the road right-of-way are required.

Sec. 6.12.9 Subdivision Roads and Related Infrastruture.

A. In residential subdivisions, the road system shall be designed to serve the needs of the neighborhood and to discourage use by truck traffic and through traffic and still provide access to adjacent neighborhoods for emergency services. The use of neighborhood traffic calming devices such as traffic circles, cul-de-sac, etc. are encouraged in residential areas.

B. Major local roads shall be identified on plans.

C. All roads and related infrastructure within the proposed subdivision shall be designed, constructed, and paved to County specifications provided herein.

D. The developer shall be required to design, construct, and pave to County specifications, one road from the subdivision to the nearest paved, public roadway with legal access, if such a road does not already exist.

E. Roads and stormwater facilities within a subdivision shall be dedicated as either public or private.

F. Public dedications shall be pre-approved by the Development Review Committee. If a MSBU is established as the maintenance and operation entity, roads and stormwater facilities can be platted as public.

G. Cul-de-sac diameters to the right-of-way line shall not be less than 120' with a pavement radius of 40' for residential subdivisions and shall not be less than 120' to the right-of-way line with a pavement radius of 45' for commercial or industrial subdivisions (refer to detail in Article 7). A grassed island no greater than 50' in diameter may be constructed in the center of a cul-de-sac.

H. Dead end roads shall not exceed 1,500' and shall have a cul-de-sac at the terminal end (refer to detail in Article 7). Dead end roads intended to provide future access to adjacent unplatted areas may be permitted without a cul-de-sac provided that no lots front thereon, the length does not exceed 1,500', and appropriate temporary end-of-road markers are provided.

I. The total perimeter of a block shall not exceed 4,500'. Larger block perimeters will be permitted for blocks surrounding or adjacent to natural or artificial features such as lakes, rivers, and golf courses where limiting block lengths are not feasible and impractical.

J. Corner radii at the intersection of the two rights-of-way shall be not less than 25'. Minimum pavement radii shall be 40' for residential subdivisions and 50' for commercial or industrial subdivisions.

K. Centerline radii shall be designed to accommodate the minimum design speed of 30 mph for subdivision local and minor local roads, 40 mph for major local and collector roads, and 45 mph for arterial roads in accordance with FDOT and AASHTO Standards.

L. Evacuation routes for developments shall be indicated on the improvement plans.

Sec. 6.12.10 Intersection Layout.

A. Roadways shall intersect at approximately right angles. Opposing streets shall have horizontal and vertical alignments in accordance with FDOT standards.

B. Roadway access location and minimum spacing shall be consistent with traffic safety standards. If standards cannot be achieved, the County Engineer, or designee, can review and approve on a case-by-case basis.

C. All median openings shall be designed in accordance with FDOT Median Opening Handbook.

D. All intersection users shall be accommodated including pedestrians and bicyclists.

Sec. 6.12.11 Turn Lanes.

Turn lanes shall be required as warranted by the project's Traffic Impact Analysis and in accordance

with FDOT or as approved by the County Engineer. In addition, turn lanes shall be considered any time an unsafe condition exists or will be created. The cost of construction of such lanes shall be the responsibility of the developer. Additional right-of-way may be required and shall be dedicated by the developer and shown on the Improvement Plans and Final Plat. Any off-site improvement designs shall be submitted as an Improvement Plan application.

Sec. 6.12.12 Sidewalks.

A. Sidewalks shall be provided in the Urban Area, Rural Activity Centers, and Specialized Commerce Districts along arterial, collector, and major local streets where these streets adjoin the project and minimally along one side of the internal streets. Sidewalks shall be constructed with all-weather surfaces and shall meet Americans with Disabilities Act, Florida Building Code, and FDOT Design Standards.

B. Sidewalks outside the right-of-way and independent of the street system are encouraged as an alternative to sidewalks parallel to a roadway, provided equivalent pedestrian needs are met.

C. The sidewalk system shall provide connectivity between existing and proposed developments.

D. At the discretion of the Development Review Committee, in lieu of construction along external streets, the developer may pay a sidewalk fee to the County in an amount necessary to complete construction. This amount shall be determined by the project engineer and approved by the County with payment required prior to final plan approval. The County may use these funds toward the construction of sidewalks throughout the County based on priorities established by the Board.

Sec. 6.12.13 Utility Position in Right-of-Way.

Utilities, when constructed in the right-of-way, shall be positioned in accordance with construction details in Article 7. Work within a public right-of-way shall be subject to a Right-of-Way Utilization Permit issued by the Office of the County Engineer.

Sec. 6.12.14 Street Lighting.

A. Street lighting, if provided, shall be in accordance with a plan designed by the utility company, or using the Illuminating Engineering Society of North America (IESNA) Lighting Handbook, current edition.

B. An individual, homeowner's association or other legal entity shall be responsible for care, maintenance and costs of street lighting.

C. Spacing of light poles or posts shall conform to the standards in the IESNA Lighting Handbook, current edition.

D. The height and shielding of lighting fixtures shall provide proper lighting without hazard to drivers or nuisance to residents in accordance with Division 19.

Division 13 Stormwater Management

Sec. 6.13.1 Purpose and intent. The purpose of this division is to provide stormwater guidelines and design criteria to reasonably protect the public from uncontrolled stormwater runoff which causes flooding, pollution, erosion, and sedimentation.

Sec. 6.13.2 Minimum requirements.

A. Plan sheets shall minimally show:

(1) All pre-development and post-development basins that contribute runoff to the area proposed for development, including all off-site contributions, and areas that may be impacted by the development fully delineated and quantified.

(2) The time of concentration, and travel path, for each watershed.

(3) The location and design parameters for all retention/detention areas including:

(a) Dimensions or coordinates for constructability.

(b) Cross sections, to scale, along the width and length of each pond, showing the design high water elevation, estimated seasonal high water elevation, pond top elevation, pond bottom elevation, side slope steepness, maintenance berm width, sod stabilization of the pond side slopes, and appropriate vegetative cover on the pond bottom. A typical cross section can be used instead when sufficient information is shown on the plan view which minimally includes pond width and length call outs as measured at the pond's top and bottom elevations.

(c) Soil boring location with labels.

(4) All stormwater features or connective elements located and identified that may have an impact on the existing or proposed system, including but not limited to cross-drains, natural weirs, water line of lakes, wetlands, rivers, springs, streams, canals and other manmade or natural features.

(5) All existing and proposed stormwater structures located and identified including labels and design parameters such as, references to a detail or source, widths, depths, heights and pertinent elevations.

(6) All existing and proposed stormwater pipes located and identified including labels and design parameters such as, sizes, materials, lengths, slopes, references to a detail or source, and invert elevations.

(7) All existing and proposed swales located and identified including labels and design parameters such as, side slope steepness, widths, dimensions, ditch block locations and details, stabilization, and material used to stabilize.

(8) Minimum finished floor elevations a minimum of one foot higher than the one percent (100-year) flood elevation.

(9) Site access accounting for stormwater conveyance with a swale, culvert, or curb and gutter driveway.

(10) Site grading, using spot grades at all corners and other critical or transitional locations, with directional flow arrows, details, cross sections, or general grading depictions.

(11) Erosion control measures, including:

(a) The construction entrance location and controls;

(b) Limits of silt fence, turbidity barrier, and other perimeter or intermediate controls; and

(c) References to a detail or source.

(12) Details, cross sections, or references clearly describing the construction intent. It is acceptable to reference standard details, such as FDOT's, when used instead of reproducing them.

B. Calculations shall minimally include:

(1) Runoff analysis that reflects the project basin soil type, area, and ground cover based on pre-conditions and post-conditions for ultimate development.

(2) Time of concentration and travel time analysis for hydrology and hydraulic systems.

(3) Soil boring parameters including the confining layer elevation, estimated seasonal high water elevation, porosity, and permeability rates as justified in the geotechnical investigation report.

(4) Hydrologic stormwater model analysis including all input parameters, supporting calculations, assumptions, documentation for design and results.

(5) Hydraulic stormwater model analysis including all input parameters, supporting calculations, assumptions, documentation for design and results.

(6) A minimum freeboard of six inches shall be provided for all retention/detention areas.

(7) Recovery analysis based on drawdown of the total required volume.

(8) Calculations must be consistent with the plan sheets and other supporting details. Calculations shall use standard methodology recognized in the State of Florida, including hand and/or computerized calculations.

C. Geotechnical investigation report shall minimally include:

(1) A summary of all subsurface exploration data and subsurface soil profiles.

(2) Exploration logs, laboratory or in situ test results, groundwater information, the interpretation and analysis of the subsurface data.

(3) Recommendations for design, discussion of conditions for solution of anticipated problems, and recommended geotechnical special provisions.

Sec. 6.13.3 Types of stormwater management facilities.

A. Existing public

(1) An adjacent public retention/detention area may be utilized for disposal of runoff generated by an applicant's improvements if it can be proven that capacity is sufficient.

(2) A Stormwater Connection Application is required for any connection to or expansion of a County retention/detention area, including but not limiting to drainage retention/detention areas or conveyance systems, not previously designed or permitted to consider the applicant's improvements.

(3) If the retention/detention area is still under a maintenance agreement, approval in writing must be received from the maintenance entity, when not the County, stating no objection to the use of the facility.

B. Natural

(1) A natural facility may be used without further excavation upon the applicant's submittal of calculations demonstrating the existing capacity is sufficient.

(2) Proof of control, ownership or easement for operation and maintenance of the natural facility shall be provided.

(3) Runoff from adjacent property, to a natural facility, must be perpetuated to the extent of protecting upland owner interest.

C. Proposed public

(1) Retention/detention areas shall have side slopes no steeper than 4:1 (horizontal: vertical) with a minimum berm width of 12' stabilized at six percent grade maximum around the entire perimeter of the facility. Side slopes steeper than 4:1 may be allowed with additional accommodations related to public safety, maintenance, and access upon approval by the County Engineer or designee.

(2) Stormwater management systems servicing a public development shall be owned and maintained by Marion County. They may be privately owned and maintained, upon approval by the County Engineer and granting of an easement to Marion County, minimally allowing but not obligating, emergency maintenance, as well as access to, drainage of, conveyance of, and storage of stormwater.

(3) If fencing is used, it shall be per the County detail found in Article 7.

(4) The bottom of all dry water retention areas shall have appropriate vegetative cover.

D. Proposed private

(1) Residential subdivisions. Retention/detention areas shall have side slopes no steeper than 4:1 (horizontal: vertical) with a minimum berm width of 12' stabilized at six percent grade maximum around the entire perimeter of the facility. Side slopes steeper than 4:1 may be allowed with additional accommodations related to public safety, maintenance, and access upon approval by

the County Engineer or designee.

(2) Commercial lots or subdivisions. Retention/detention areas shall be designed with a minimum berm width of 5' stabilized at six percent grade maximum around the entire perimeter of the facility and side slopes:

(a) No steeper than 4:1 (horizontal: vertical); or

(b) Steeper than 4:1 with an access path provided to the bottom of the facility at a slope of no steeper than 3:1; or

(c) As vertical walls with a structural detail for the wall design provided, adhering to Florida Building Code, an access path provided to the bottom of the facility at a slope of no steeper than 3:1, and an appropriate barrier provided when adjacent to vehicular paths and parking areas.

(3) The bottom of all dry water retention areas shall have appropriate vegetative cover.

Sec. 6.13.4 Stormwater quantity criteria.

A. Methodologies, rainfall distribution and intensities shall be consistent with those approved by the governing water management district. Assumed parameters must be supported by conventional methods.

B. Design storms shall consider open or closed basins as provided in Table 6.13-1.

Table 6.13-1 Design Storms and Discharge Conditions

Basin	Frequency Duration	Discharge Rate	Discharge Volume
Open Basin	25-year 24-hour	$Post_{25}$ less than or equal to Pre_{25}	$Post_{25}$ less than or equal to Pre_{25}
Closed Basin	25-year 24-hour and 100-year 24-hour	$Post_{25}$ less than or equal to Pre_{25} and $Post_{100}$ less than or equal to Pre_{100}	$Post_{100}$ less than or equal to Pre_{100}
Closed Basin w/downstream flooding*	25-year 24-hour and 100-year 24-hour	0 cfs	0 cf

*Downstream flooding is that flooding observed and validated by the County.

C. Discharge conditions

(1) All stormwater facilities shall be designed to limit discharges considering open or closed basins per Table 6.13-1.

(2) Discharges shall mimic the pre-development condition, match the pre-development location and not exceed the pre-development rate, except when discharging into a stormwater system designed to accept such discharges.

(3) The bypass or discharge of offsite runoff, shall be allowed when it mimics the pre-development condition, matches the pre-development location and does not exceed the pre-development rate, except when discharging into a stormwater system designed to accept such discharges.

(4) In closed basins with downstream flooding, existing improvements may be included in the

pre-development calculations when all of the following apply:

(a) The existing improvements were constructed as part of a development with a permitted stormwater system or constructed prior to stormwater permitting requirements;

(b) Discharge from the existing improvements are into a private system designed to accept such discharges or a public system; and

(c) There is no adverse impact downstream including, but not limited to, flooding of structures or hindering of access.

(5) A discharge structure shall be required for all retention/detention areas not designed to retain the entire 100-year 24-hour post-development design storm.

(6) Discharge structures shall include a skimmer at a minimum. Design elements such as baffles or other mechanisms suitable for preventing oils, greases, and floating pollutants from discharging out of the facility shall be considered. When discharging from a natural facility, a skimmer may not be required upon approval from the County Engineer or designee. When a grassed weir is used it shall be constructed with a hard core center or geoweb.

D. Recovery.

(1) All retention/detention areas shall recover the total volume required to meet the discharge volume limitations within 14 days following the design rainfall event.

(2) For retention/detention areas not able to recover the total required volume within 14 days, the stormwater facility volume shall be increased to retain an additional volume of the post minus pre difference in runoff for the 25-year 24-hour design storm when in an open basin or for the post minus pre difference in runoff for the 100-year 24-hour design storm when in a closed basin. The control elevation for retaining this volume shall be no greater than the top of constructed stormwater facility or the easement limits of a natural facility. Credit for the recovered volume through the 14 day duration may be considered to meet this requirement.

E. Infiltration or percolation can be considered when establishing the design high and discharge elevation.

F. Other design criteria may be used if approved by the County Engineer or designee.

Sec. 6.13.5 Flood plain and protection.

A. This section provides requirements for all land use activities, including single family residences, which materially change the location, elevation, size, capacity, or hydraulic characteristics of the existing one percent (100-year) flood plain as identified by the Federal Emergency Management Agency (FEMA). The intent is to ensure that equivalent flood plain volume and conveyance is maintained. This section also supplements Division 5.3 Flood Plain Overlay Zone.

B. Land use activities which materially change the flood plain may be permitted when calculations performed by a licensed professional are provided demonstrating that compensating storage or other hydraulic characteristics are provided on the owner's property or within an easement. The calculations shall be reviewed and approved by the County Engineer or designee.

C. Land use activities that do not meet the thresholds for a stormwater analysis shall minimally be required to demonstrate one-for-one compensating storage, to be reviewed and approved by the County Engineer or designee.

D. When proposed improvements encroach into a flood hazard zone, it shall be necessary for the applicant to file a map amendment or revision with FEMA.

Sec. 6.13.6 Stormwater quality criteria.

A. Methodology. Stormwater management systems may be designed using a combination of design techniques ranging from traditional to low impact. The method(s) utilized shall focus on enhancing

the quality of stormwater discharge and recharge through shallow systems, the processes of adsorption, filtration, denitrification, ion exchange, nutrient uptake, microbial activity, and decomposition.

(1) Exemptions.

(a) Sites less than ten acres with an industrial use, as defined by North American Industry Classification System. Larger size exemptions will be considered through the waiver process.

(b) Existing commercial parcels two acres in size or less. This exemption shall only apply if the parcel is a parcel of record, with the appropriate land use and zoning, on or before the original adoption of the Springs Protection Ordinance 09-17 dated 06/02/09. Land use changes and rezonings that occur after this date which create a parcel two acres or less are not exempted.

(2) Transportation facilities. Public transportation projects that have a contributing drainage area comprised mostly of the road right-of-way and non-developed natural areas are not considered significant contributors of nutrients and shall meet the water quality standards of the governing state agency. Public transportation projects in urbanized or developed areas shall be evaluated for their nutrient loading impact and designed accordingly. Transportation facilities provided as part of a development shall meet the water quality requirements set forth in this Code unless it is clearly demonstrated that drainage is not received from parcels within the development.

(3) The following systems shall be considered as meeting the County's stormwater quality criteria:

(a) Systems that demonstrate numerically the post-development stormwater quality is equal to or better than the pre-development stormwater quality using methodology approved by the County Engineer or designee. Consideration shall be for both surface water and groundwater; or

(b) Dry retention systems that have a depth of four feet or less, measured from top of bank to pond bottom; or

(c) Dry retention systems that have a depth of six feet or less, measured from top of bank to pond bottom, with side slopes that are no steeper than 4:1 and sodded bottoms; or

(d) Wet retention/detention systems, including wetlands, that meet the governing State standards; or

(e) Distributed volume. This treatment type shall provide distributed volume within each sub-basin, mimicking the pre-development sub-basin, prior to discharging to the project's stormwater quantity facility.

1. The required volume to be distributed shall be a minimum of 75 percent of the difference between the post-development and the pre-development initial abstraction, not to exceed 1 inch. If the initial abstraction is less than 0.25 inches, a minimum of 0.25 inches shall be used. The initial abstraction shall be calculated using the National Resources Conservation Service Technical Release 55 (NRCS TR-55) methodology.

2. The contributing area shall be of approximately two acres or less.

3. Distributed volume shall be controlled within systems such as, shallow swales, bioretention facilities, or recessed medians located within a right-of-way, drainage right-of-way, drainage easement or conservation easement.

4. When bioretention facilities are used they shall provide retention/detention of stormwater for the basin utilizing vegetated depressions that implement landscaping and soil specifications in the design.

5. Distributed volume upstream of the receiving on-site retention/detention area shall fully recover surface storage within 72 hours.

6. There is no freeboard requirement for systems such as shallow swales, recessed medians

or bioretention facilities used to solely achieve distributed volume.

7. Distributed volume shall be allowed within required buffer area if the applicant can demonstrate that the intent of the buffer can still be accomplished.
8. The seasonal high water table shall be a minimum of 1' below the invert of the swale or 1' below the bottom of the prepared soil matrix of the bioretention facility.

B. Alternative treatment techniques. When proposed systems do not meet the above stormwater quality criteria, two of the following alternative treatment techniques shall be implemented and evaluated per contributing basin.

(1) Limiting direct discharge. No greater than 15 percent of the project area can be directly discharged to the water quantity facility. Roof area shall not be included in these calculations and may be directly connected. The remaining impervious area shall be conveyed for a minimum distance of 25 feet at a rate no greater than 1.5 fps for a mean annual storm event to the water quantity facility via overland flow or a vegetated swale. Pipe can only be used when crossing under driveways and roads and when directly connecting roof runoff.

(2) Pervious parking. Projects that require more than 30 parking spaces shall utilize porous concrete or asphalt material on a minimum of 20 percent of the total parking spaces required. Approved grass parking spaces may also be used as an alternative to meet this requirement. Use of this alternative may be considered throughout the site and not per contributing basin.

(3) Stormwater harvesting system. This technique shall provide for the collection and reuse of stormwater or rainwater through the use of cisterns, underground tanks, wet stormwater facilities, rain barrels or other systems, as may be approved by the County Engineer or designee. These systems must harvest and reuse the first 1" of runoff from a minimum of 40% of the impervious area. Two alternative treatment techniques will be satisfied when runoff is collected from a minimum of 80% of the impervious area. Use of this alternative may be considered throughout the site and not per contributing basin. These systems must provide the following:

(a) An overflow or bypass.

(b) A drawdown mechanism by use or direct discharge.

(c) Reuse for irrigation or other approved purposes to augment a water supply.

(4) Site preservation. This treatment type shall provide for the preservation of natural low areas, existing vegetation, and wetlands as well as karst features, when only non- developed, natural areas discharge to the karst feature. A recorded conservation easement shall be established over the area to be preserved and shall not be less than 10 percent of the parcel of record at time of submittal. Marion-friendly landscaping area and groundwater recharge preservation area, when applicable, may be considered toward meeting this criteria.

(5) Limit impervious area. This treatment type shall limit the total impervious area to no greater than 50 percent of commercial or industrial parcels or 30 percent of residential subdivisions or 25 percent of residential parcels (when an individual residential improvement is being proposed without road improvements).

(6) Other low impact development treatment types. Alternative techniques may be approved by the County Engineer or designee in which the technique can demonstrate a water quality benefit greater than or equal to the treatment types provided in this division.

C. Best Management Practices (BMPs) are characterized as runoff prevention, retention, detention, and pollution prevention. The following BMPs are required and shall be incorporated as part of the project's stormwater management system and demonstrated by a permit from another agency if applicable:

(1) Oil/water separator or comparable BMP technology is required for pre-treating runoff from vehicular traffic areas associated with the following practices:

(a) Car washes;

(b) Auto or marine paint and body shops;

(c) Auto, recreational vehicle, commercial truck, tractor-trailer, farm tractor, heavy machinery, or small engine parts, service and repair operations;

(d) Automotive fleet operations; and

(e) Gas stations, including convenience stores with gas pumps.

(2) A minimum of three feet of unconsolidated soil material shall be provided between the surface of any limestone bedrock and the bottom and sides of any stormwater facility. Excavation and backfill of suitable material may be made to meet this criterion.

(3) Retention and/or detention facilities shall have a maximum depth of ten feet, as measured between the design high water elevation and the pond bottom for dry facilities, and between the design high water elevation and the normal control water elevation for wet ponds.

(4) Other best management practices are encouraged, such as but not limited to routine street sweeping, and fertilizer free zones. When practices such as these are proposed and documented in a manner that is enforceable, the County Engineer may accept these as an additional treatment technique.

Sec. 6.13.7 Geotechnical criteria.

A. Methodology. The pattern and type of test borings shall be determined by the project engineer, geotechnical engineer, or geologist based on the project size, type, and complexity.

(1) Infiltration/permeability rate tests shall follow methods acceptable to the governing State agency and shall be performed at the depth and location which will provide representative test results for use in the design of the retention/detention area. Soil identifications shall refer to the AASHTO Soil Classification System conforming to AASHTO Designation M 145-91.

(2) Where visual reconnaissance, available published data, and/or initial borings suggest high karst sensitivity or lithologic variability, additional borings may be required if deemed necessary by the County Engineer or designee.

B. Minimum requirements

(1) Depth. Soil test borings shall be performed to a minimum depth of 10 feet below the proposed finished grade of the bottom of all retention/detention areas or the permanent pool elevation and once the data has been obtained the hole shall be backfilled and compacted.

(2) Number of tests. At least two tests shall be performed within the boundary of each proposed retention/detention area. For each half acre of pond bottom area and for each lineal retention/detention area of 250 feet, an additional test shall be conducted. The County Engineer or designee, may require additional tests if the initial tests indicate the need for them.

(3) Infiltration/permeability tests. For retention/detention areas utilizing percolation or infiltration in the design model, there shall be a minimum of two infiltration rate tests for each retention/detention area. Data used for soil permeability testing or infiltration analyses for the retention/detention areas shall be signed and sealed by a professional engineer or professional geologist for both data and procedural accuracy.

(4) Aquifer parameters. The estimated seasonal high ground water elevation and confining layer shall be clearly identified.

C. Design considerations

(1) The estimated seasonal high water elevation and the confining layer shall be set no lower than the bottom of the boring for the purposes of stormwater system modeling.

(2) The pond bottom elevation of a stormwater facility shall be designed a minimum of 1’ above the

estimated seasonal high water elevation. When the pond bottom is within 1' of the estimated seasonal high water elevation, a 50 percent reduction factor shall be used for percolation or ground water mounding analysis shall be included.

Sec. 6.13.8 Stormwater conveyance criteria.

A. Methodology. Calculations for stormwater collection and transmission systems shall be designed using the Rational Method based on FDOT Zone 7 Intensity - Duration Curves. Ditch and storm drain flow capacity shall be determined from Manning's Formula with coefficients of roughness based on an assumption of conditions of ultimate development.

B. Minimum requirements

(1) Design storm. Conveyance systems shall be sized to accommodate the 25-year 24-hour storm event based on the condition of ultimate development.

(2) Tailwater

(a) The tailwater elevation utilized shall be based on the tailwater elevation of the receiving water body plus 6" at the peak discharge time of the design storm.

(b) Alternatively, the tailwater elevation utilized can be the design high water elevation of the 25-year 24-hour design storm.

(c) Note that future connections must be able to demonstrate that conveyance can be achieved at all connections, future and existing, meeting one of the above criteria.

(3) Lane spread. Lane spread shall be calculated using FDOT criteria considering the 4 inch per hour or 10-year frequency storm as appropriate, to produce the following results:

(a) Subdivision Local and Minor Local Roads. The allowable lane spread shall be no greater than the crown (or high side) of the road. For all divided roadways the allowable lane spread shall be no greater than the inside (or high side) edge of pavement.

(b) Arterial, Collector, and Major Local Roads. The allowable lane spread shall leave 8' of travel lane dry in each direction.

(4) Drainage rights-of-way. All retention/detention areas within subdivision developments shall have direct access to a right-of-way. A drainage right-of-way may be necessary to establish this access. A minimum 12' wide, stabilized vehicle access at six percent maximum grade shall be provided to allow for ingress and egress of the retention/detention area. Drainage rights-of-way shall be a minimum of 30 feet in width. As an alternative to right-of-way, access may be provided by an easement of the same width.

(5) Drainage easements. All drainage swales to facilities or underground stormwater conveyance systems shall be within drainage easements, except where rights-of-way are provided. Drainage easements shall be a minimum of 20 feet in width.

(6) Floodways. If in a floodway or flood prone area, the cross drain shall be sized to accommodate the design intent of that basin.

(7) Sizes. Stormwater conveyance pipes and cross culverts shall be a minimum of 18" diameter or equivalent. Driveway culverts shall be a minimum of 15" diameter or equivalent for residential use and a minimum of 18" diameter or equivalent for commercial use. Roof drains, prior to connection to the overall stormwater system, are exempt from minimum diameter requirements.

C. Design considerations

(1) Culvert flow capacity shall be determined for the conditions of inlet control or outlet control as applicable.

(2) Stormwater collection and transmission systems shall be by inlets, swales, culverts, etc. The use of siphons, pumps, or similar devices is not allowed.

(3) Ditch blocks shall be designed and constructed with hard core centers.

(4) Stormwater flow velocity shall be taken into consideration in the design of all drainage ditches and appropriate erosion protection shall be provided in accordance with the FDOT Drainage Manual.

(5) Where any storm pipe terminates at an earthen slope a mitered end section and concrete collar, or approved equal, is required. Concrete mitered end sections are required for culverts, cross drains and side drains when within a County right-of-way with posted speeds of 40 mph or greater.

Sec. 6.13.9 Grading criteria.

A. Parcels and lots. Sufficient grading shall be designed to allow surface water runoff and controlled discharge be drained to the retention/detention areas without causing adverse affects on adjacent property. Each parcel or lot shall have a direct connection to the stormwater system, unless the applicant can clearly demonstrate that there are not adverse impacts to adjacent property. In subdivisions, each lot shall have grading designed to be independent of any other lot unless provisions are made for multi-lot grading at initial phase of development, and/or easements for grading purposes are established. All downstream grading must be at a level of completion to support upstream development prior to or simultaneously with the upstream development. Grading can be demonstrated by the use of flow arrows, spot grades, and other iteration callouts, details, and typical grading depictions, or any combination thereof.

B. Buildings. All buildings shall have a minimum finished floor elevation 8” above finish grade and graded away from the building for stormwater runoff. Exception: porches, patios, carports, garages, screen rooms may be 4” above finish grade. In no case shall finished floor elevations be specified below the one percent (100-year) flood plain plus one foot.

C. Driveways. In the case where roadside swales are the drainage conveyance system, driveway design information shall be included on the plans minimally addressing culvert size, invert elevation, and direction of slope of culvert or the placement of ditch block for each at every specific lot. If design is not to be lot-specific, design shall be based on worst-case scenario.

D. Affidavit. At time of building application, applicant shall provide an affidavit that the impervious area, lot grading plan, minimum finished floor elevation, and stormwater system complies with the development plan on file with the County. If no development plan is on file, applicant shall provide an affidavit that all drainage is held on-site or directly tied to a recognized drainage system. The applicant shall provide a sketch with the building application indicating the drainage intent.

E. Construction. All stormwater runoff increase during construction and following must be kept on-site or directed to swales, ditches, or piping to approved drainage areas.

Sec. 6.13.10 Erosion control.

A. Erosion and perimeter controls shall be used to prevent runoff, and/or disposition of sediment from the site and shall be regularly inspected and maintained during construction. Sites are required to control waste such as building materials, concrete truck washouts, chemicals, litter, and sanitary waste. Failure to install or maintain erosion, perimeter, and waste controls shall result in enforcement, up to and including an order to stop all work until site is in compliance.

B. Compliance with the FDEP’s National Pollution Discharge Elimination System (NPDES) shall be demonstrated by providing a copy of the permit or notice of intent prior to construction.

Sec. 6.13.11 Illicit connection and illicit discharge.

A. Prohibitions. Throwing, draining, or otherwise discharging, causing, or permitting others to throw, drain, or otherwise discharge into public right-of-way, easement, or any County permitted stormwater system, any liquids, solids or waters containing any wastewater, pollutants,

contaminants or hazardous materials other than stormwater is prohibited.

B. Exceptions. The following are exceptions to the above discharge prohibitions:

(1) Discharges and releases from the following sources: potable water line flushing, irrigation, diverted stream flows, rising ground waters, uncontaminated ground water infiltration, uncontaminated pumped ground water, discharges from potable water sources, building foundation drains, air conditioning condensation, natural springs, water from crawl space pumps, roof drains, footing drains, individual residential car washing, flows from riparian habitats and wetlands, dechlorinated swimming pool discharges, street maintenance wash-down water;

(2) Discharges or water flow from firefighting operations;

(3) Other discharges expressly specified in writing by the County Engineer as being necessary to protect public health and safety;

(4) Discharges associated with investigatory dye-testing. However, this activity requires prior written notification to the Office of the County Engineer 24-hours prior to the time of the dye test;

(5) Non-stormwater permitted discharges under an NPDES permit, waiver, or waste discharge order issued to the discharger and administered under the authority of the United States Environmental Protection Agency (EPA), provided that the discharger is in full compliance with all requirements of the permit, waiver, or order and other applicable laws and regulations, and provided that written approval has been granted for any discharge to the stormwater management system; and

(6) Charity car washes.

Sec. 6.13.12 Operation and maintenance.

A. The stormwater management system and associated elements shall be operated and maintained in accordance with this Code, the applicable water management district, the manufacturer's specifications, and other specifications necessitated by the design.

B. An operation and maintenance document shall be provided. The owner shall include a signed and dated certification in the document as follows: I hereby certify that I, my successors, and assigns shall perpetually operate and maintain the stormwater management and associated elements in accordance with the specifications shown herein and on the approved plan (this signature is not required until the final submittal).

C. Operation and maintenance documentation shall be incorporated into any contracts, covenants, and/or restrictions for the property owner association and/or property management association.

Division 14 Water and Wastewater Requirements

Sec. 6.14.1 Purpose and Intent.

This section sets forth the general requirements for the uniform design and approval of utility systems.

Sec. 6.14.2 Connection Requirements.

A. Connection determination

(1) All new and expanding development projects shall contact the MCUD for determination of availability and/or point of connection. Within ten working days, the MCUD shall issue an official written determination advising the applicant if services are available and, if so, shall indicate the potential source, the nearest connection point, and the need for any additional off-site facilities. Potential sources may include MCUD, a PSC-certified utility, a city, a Community Development District, or other entity authorized by the State of Florida to provide water and wastewater services. The written determination shall accompany all applications for building permits and/or other development reviews.

(2) Connection distance determinations shall be measured beginning at the nearest property boundary and extend along any legal access eligible for utility installation and/or operation using the shortest distance measurement.

B. New Single Family Residential and Duplex Construction

(1) Water system

(a) New single family residential in the Urban or Rural area shall connect to a centralized water system with available capacity if a water line is within a connection distance of 200'.

(b) New duplex construction in the Urban or Rural area shall connect to a centralized water system with available capacity if a water line is within a connection distance of 400'.

(2) Wastewater system

(a) Single Family Residential

1. New single family residential in the Urban or Rural area shall connect to a central sewer system if a sewer line from a central sewer system with available capacity is within a connection distance of 200' and connection may be made to the existing sewer line using a gravity line or an on-site pumping station; or

2. New single family residential in the Urban or Rural area shall connect to a central sewer system if a sewer line from a decentralized sewer system with available capacity is within a connection distance of 200' and permission is obtained by the owner/operators of the decentralized system.

(b) Duplex Construction

1. New duplex construction in the Urban or Rural area shall connect to a central sewer system if a sewer line from a central sewer system with available capacity is within a connection distance of 400' and connection may be made to the existing sewer line using a gravity line or an on-site pumping station; or

2. New duplex construction in the Urban or Rural area shall connect to a central sewer system if a sewer line from a decentralized sewer system with available capacity is within a connection distance of 400' and permission is obtained by the owner/operators of the decentralized system.

C. New Development in Urban Areas

(1) Water System

All new developments shall connect to an existing central water system if a system with available capacity has distribution lines within a distance equal to or less than 400' times the total number of ERCs within the project at build out. Otherwise, the project shall comply as follows:

(a) New residential development with 31 lots or more, all multi-family and commercial projects, shall design and construct a decentralized water system in compliance with the requirements of Section 6.14, and construct an onsite WTP sufficient in size to serve the development in compliance with FDEP requirements and other applicable requirements of this Code.

(b) New residential developments with less than 31 lots and more than one mile from the nearest existing central water system may use individual onsite wells in compliance with the requirements of FDOH.

(2) Wastewater system

All new development shall connect to an existing central sewer system if a system with available capacity has a treatment plant or sewer line within a connection distance of 400' times the total number of ERCs within the project at build out. Otherwise, the project shall comply with the following as applicable:

(a) New residential developments with five or more ERCs shall be serviced by a decentralized

wastewater treatment system.

(b) New residential developments that consist of fewer than five ERCs may use individual OSTDS in conformance with Section 6.13.3, or

(c) New non-residential site developments with no food preparation that consist of 15 or more ERCs and will discharge only domestic waste, shall design and construct a wastewater treatment system that complies with all applicable requirements of the FDEP, or

(d) New non-residential site developments with no food preparation that consist of fewer than 15 ERCs and will discharge only domestic waste may use an OSTDS with a minimum effective septic tank capacity of two times the requirements of the FDOH and an approved outlet filter is installed.

(e) New non-residential site developments which include cooking or food preparation on site may discharge into the systems referenced in subsections (a) and (b), above, providing the food preparation wastewater is pretreated and monitored as follows:

1. The facility shall install grease removal systems, providing an effective size of 1.5 times the requirement of FDOH, or 1,200 gallons, whichever is greater.
2. Grease removal systems and traps shall comply with the MCUD Industrial Pretreatment Ordinance, as amended.
3. For OSTDS users, failure to submit an annual maintenance report to MCHD, or the utility provider shall constitute a violation of this LDC.
4. Grease removal systems shall comply with design standards in FAC64E-6.

D. New Development in Rural Areas

(1) Water system

New rural developments with any buildable lot less than two acres in size shall connect to an existing central water system if a system with available capacity has water distribution lines within a connection distance of 400' per each ERC from the project boundary. Otherwise, the developer shall design and construct a decentralized water system in compliance with all applicable FDEP requirements and construct an onsite WTP that meets the needs of the development and complies with all applicable requirements of the FDEP. The project may use individual onsite wells if:

(a) The project contains 31 units or less with a gross density no greater than one unit per 3.5 acres and a minimum lot size of one acre; or

(b) All lots contain a minimum buildable area of two acres.

(2) Wastewater system

New rural developments containing any buildable lot less than five acres in size shall connect to an existing central sewer system if a system with available capacity has a treatment plant or sewer line within a distance of 400’ times the total number of project ERCs at build out or five miles, whichever is less. Alternatives to this requirement are as follows:

(a) If all lots are at least one acre in size, the developer shall design and construct a decentralized wastewater treatment system that meets the needs of the development and complies with all applicable requirements of FDEP or FDOH, as applicable, and the County.

(b) If the project at build out contains less than five lots and all lots are at least one acre in size, then the development may utilize OSTDS that meets the requirements of FDOH and Section 6.13.3.

(c) If all buildable lots at build out are five acres or greater, the development may utilize an OSTDS that meets the requirements of FDOH and Section 6.13.3.

E. Reclaimed Water System

(1) All new projects which consist of 31 or more ERCs and are required under Section 6.13.2 A-D above to connect to a central sewer system shall contact MCUD for availability of reclaimed water.

(2) The project shall connect to the County's reclaimed water system if MCUD determines that incorporation into the system represents a beneficial use of the reclaimed water. If so required, the installation of an appropriate reuse distribution system, and connection to the reclaimed water system shall be a condition precedent to receipt of potable water and wastewater service.

Sec. 6.14.3 Onsite Waste Treatment and Disposal Systems (OSTDS).

The following will apply to new, modified, or repaired OSTDS:

A. All OSTDS permits shall be issued in conjunction with a notification of mandatory connection to a central sewer system, in accordance with Section 6.13.2.

B. Nothing set forth herein shall preclude the Board or DRC from requiring PBTS on a case-by-case basis and considering soil conditions, parcel sizes and the proximity to protected springs.

C. Any OSTDS that is determined to be failing shall be required to be brought into compliance with current DOH standards within 90 days of the inspection date, or sooner if the failing conditions pose an imminent threat to public health and safety, as determined by the MCHD, or the Board.

D. For any activity related to OSTDS that requires a Repair/Modification Permit from MCHD on or after January 1, 2011, a minimum of 24” separation between the bottom of the drainfield and estimated wettest season water table shall also be required.

E. Repairs or modification of drainfield components must comply with current FAC regulations for new systems regarding size and construction.

Sec. 6.14.4 Capital Charges and Flow Rates.

A. One ERC shall have an assigned value of 1.00.

B. One ERC shall be equal to a flow of 350 gpd for water, and 300 gpd for wastewater.

C. A single family residence shall have an ERC value of 1.00. Each multifamily or RV unit shall have an ERC value of 0.80.

D. Non-residential units shall be calculated based on the current Florida Building Code fixture unit flow value as approved by MCUD.

E. Total capital charges shall be based on ERC units multiplied by the current connection charges as set forth in Ordinance 08-27, as amended.

Sec. 6.14.5 Submittal Requirements.

A. Plan Sheets

(1) The entire utility system shall be shown on the utility plan, including the existing water systems and all proposed components within the project area.

(2) All on-site and off-site mains proposed by developer shall be drawn in plan and profile. At a minimum, the plan and profile drawings shall include the following information:

(a) Profile with elevations at one foot interval, or more frequently if required by good design practice;

(b) Horizontal and vertical control in accordance with Section 6.5.6 of this Code;

(c) All conflicts with other utility and drainage systems;

(d) Pipe data including size, lengths, material, and slopes;

(e) Size and type of fittings, valves, hydrants, air release/vacuum relief, and other related appurtenances;

(f) Note stating construction shall not exceed limits of pipe deflection per manufacturer's specifications;

(3) Separate plan sheet(s) showing location(s) and general layout of wastewater pump stations with details, working elevations, and schedules;

(4) Description and limits of special bedding requirements;

(5) Pipe restraint requirements;

(6) All manhole locations, rim and invert elevations for manholes outside of paved areas;

(7) Description and limits of special exterior coatings;

(8) Details of connection to existing systems; and

B. Construction notes regarding cover, horizontal and vertical control datums, special construction requirements, and references to standard and special details.

C. Copies of all related permit applications and issued permits shall be submitted to MCUD.

D. Hydraulic analysis

(1) Hydraulic analysis shall include all input parameters, supporting calculations, assumptions, documentation for design and results. The project engineer shall submit signed, sealed, and dated design calculations with the plans for all projects.

(2) Hydraulic calculations shall show that the distribution system, collection system or treatment facilities mains will have sufficient hydraulic capacity to provide and transport peak hourly flows and the combination of maximum daily flows and fire flows. Head losses through meters and backflow devices shall also be included in calculations for all multi-family, commercial, industrial projects, and residential meters and backflow devices 2" and larger.

Sec. 6.14.6 Design Criteria.

A. All utility systems shall be designed for the estimated tributary population.

B. All utility systems shall be designed utilizing components with a minimum 30 year life span.

C. Systems intended to be owned and maintained by MCUD shall be designed for the tributary population and in conformance with the adopted Marion County Utilities Master Plan, as amended.

D. Water systems shall be designed to satisfy the domestic water demand and fire protection requirements.

E. All systems to be owned, operated, or maintained by MCUD shall be subject to a pre-design meeting with the MCUD.

F. All meters less than 4" in size shall be installed underground in an approved meter box. Meters 4" and larger may, at the discretion of MCUD, be installed above ground. Meters larger than 4" shall be located in a meter easement located adjacent to the public right-of-way.

G. All meters in a MCUD maintained system shall be installed and inspected by the MCUD after receiving payment of applicable fees and charges.

H. All pipe shall comply with FDEP color standards.

I. The engineer shall provide the required lengths of restrained joint ductile iron pipe in table form on the plans.

Sec. 6.14.7 Construction Inspection.

A. Utility installation projects shall be inspected on an as needed basis by MCUD to determine conformance to the approved plans and specifications.

B. Non-conformance with approved plans or specifications, or evidence of faulty materials or workmanship shall be called to the attention of the developer or engineer. If deficiencies are not corrected in an expeditious manner, MCUD shall suspend all work on the project or withhold the

Certificate of Completion.

C. A final inspection with MCUD is required prior to final approval for completion.

Sec. 6.14.8 Completion and Closeout.

A. As-Built/Record Survey requirements shall be provided for those systems that are owned, operated, or connected to MCUD and shall meet criteria identified in Section 6.5.7.

(1) Three sets of As-Built/Record Survey signed and sealed by a Florida Licensed Professional Surveyor and Mapper shall be submitted to MCUD prior to final inspection along with a digital version of the survey and plan set in a format pre-approved by MCUD.

(2) Inspection and testing reports of all improvements shall be submitted with the As-Built/Record Survey.

(3) Certification of Final Completion: When all required improvements have been constructed, the engineer shall submit a request for final inspection with a certification of final completion. The certification language is available at MCUD. After all work is completed, inspected, and accepted by the County, an approval letter will be issued to the applicant.

B. A maintenance agreement with a security limited to an irrevocable letter of credit or bond only in the amount of ten percent of the original construction costs of all constructed and accepted utility systems to be owned and maintained by the County. Such bond or letter of credit shall guarantee maintenance of the constructed and accepted utility systems for a minimum of one year from the date of construction completion, acknowledged by MCUD and shall be released upon acceptance of the constructed systems for maintenance by Marion County.

Sec. 6.14.9 Transfer of facilities to Marion County Utilities.

A. Prior to plan approval, an executed utility developer's agreement is required. This agreement shall run with the land and be binding on the developer, its successors, assigns and any other subsequent owner of the land, setting forth such reasonable provisions governing developer and MCUD responsibility pertaining to:

(1) The installation of service facilities;

(2) Private plumbing lines with the facilities of MCUD;

(3) The manner and method of payment of contributions, fees and charges;

(4) Guaranteed revenue provisions;

(5) Standards of construction or specifications;

(6) Regulations, policies, practices and procedures of MCUD;

(7) Prohibitions against improper use of MCUD's facilities;

(8) Entity responsible for ownership and operation of facilities; and

(9) Other matters normally associated with and contained in the utility developer’s agreements.

B. All facilities constructed on the developer’s property prior to interconnection with MCUD’s existing or proposed facilities shall convey such component parts to MCUD by bill of sale in a form satisfactory to the County Attorney, with the following evidence required by MCUD:

(1) Facilities proposed to be transferred to MCUD are free of all liens and encumbrances;

(2) MCUD has approved the construction of such facilities and accepted the tests to determine that such construction is in accordance with the criteria established by the MCUD;

(3) The Board has evidenced its acceptance of such facilities for MCUD's ownership, operation, and maintenance; and

(4) The developer shall maintain accurate cost records establishing the construction costs of all utility facilities constructed and proposed to be transferred. Such cost information shall be furnished

with the bill of sale and shall be a prerequisite for acceptance.

C. MCUD may refuse connection and deny service until such time as all transfer requirements have been satisfied by the developer or the developer's successors or assigns.

Division 15 Water System

Sec. 6.15.1 Purpose and Intent.

This section sets forth the general requirements for the design of a potable water distribution system.

Sec. 6.15.2 Decentralized Systems.

A. The decentralized water distribution system shall be constructed within public rights-of-way or utility easements and in compliance with this section and Article 7.

B. The decentralized WTP shall be designed in compliance with the requirements of FDEP and shall be constructed on a dedicated utility site, which will be preserved and protected for the WTP, including protection area surrounding all well sites, until connection to a centralized system is available.

C. If the decentralized water system is owned, operated or maintained by an entity that has a PSC franchise, such entity must, as a condition of such ownership or operation, agree to terminate or modify the franchise in compliance with the requirements of Section D, below.

D. A decentralized WTP which applied for a permit from Marion County after August 1, 2009, as per Ordinance 09-17, shall be taken out of service, deeded, or reclassified under any of the following conditions, which may be appealed to the DRC:

(1) A centralized system meeting the requirements stated in subsections B and C above, as determined by the owner of such centralized system, is available, at which time the centralized system owner will be responsible for providing the surveying, design, permitting, and construction of all components necessary to connect the decentralized water system to the centralized system. After connection, all components of the water system will be owned, operated, and maintained by the centralized system owner who will also be responsible for the installation and operation of all water metering; or

(2) The MCUD Director and a centralized system owner has determined the WTP is suitable for expansion or inclusion into the centralized system owners PSC territory, the WTP property and all improvements shall be deeded to the centralized system owner and reclassified as a centralized system; or

(3) If the MCUD Director determines that the size, location, or other factors show the decentralized system is not feasible for connection or inclusion into a franchised territory, the system will be reclassified as a centralized system. The reclassified system must be operated and maintained by an FDEP approved service company.

E. A decentralized water facility as described in Section 6.14.2 above, shall not be transferred to a centralized system owner without the project's decentralized wastewater system, if applicable, also being transferred to the centralized system owner. As a condition of the transfer of a project's decentralized water system, the transferee must also accept transfer of the project's decentralized wastewater system.

Sec. 6.15.3 Fire Protection.

Fire Flow capacity for water distribution systems and/or water main extensions shall be designed and constructed in accordance with Division 19.

Sec. 6.15.4 Water Distribution System.

A. Piping

(1) Water mains shall maintain a consistent alignment with respect to the centerline of the road, when installed in rights-of-way.

(2) Water mains located outside of dedicated rights-of-way shall require a minimum 20' easement.

(3) Water mains located adjacent to a road right-of-way shall have a minimum 10' easement. Additional easement widths shall be provided, as needed.

(4) Water mains shall not be placed under or within ten feet of the high water line of retention ponds, retention pond berms or any vertical structures.

(5) Water mains shall not be located along side or rear lot lines, except when placed in a dedicated easement.

(6) No water pipe shall pass through or come in contact with any part of a sanitary sewer manhole.

(7) Separation of water mains shall be in accordance with 62-604.400(2)(g),(h),(i) and (3), FAC.

(8) Requirements for Loop Mains

(a) A 6" looped connection shall be required in cul-de-sac areas and low density residential projects, unless a smaller looped connection is authorized by MCUD.

(b) Where looping of mains is not practical, minimum 8" mains shall be required, unless detailed calculations are submitted to substantiate the sufficiency of a 6" main.

(c) In commercial, industrial, and high density residential areas, minimum 8" looped mains shall be required. Larger size mains shall be required if necessary to allow the withdrawal of the required fire flow while maintaining the minimum residual pressure specified in Section 6.14.1.F.(3)(a).

(9) Location and identification of all water mains and valves shall comply with Section 7.5.12.

B. Pressure

(1) The distribution system shall be designed to maintain a minimum pressure of 20 psi during conditions of maximum daily load plus fire flow.

(2) The pressure in the distribution system shall be approximately 55 psi. In no case shall pressure be lower than 35 psi downstream of a backflow prevention device.

(3) For high pressure systems, special design considerations are required.

C. Dead Ends

(1) Dead end mains shall be minimized by making appropriate tie-ins as determined by MCUD.

(2) Where dead-end mains occur, a fire hydrant, an approved flushing hydrant, or a blow-off valve shall be provided.

D. Flushing

(1) Flushing devices shall be sized to provide a velocity of at least 2.5 FPS in the water main being flushed.

(2) No flushing device shall be directly connected to any sewer.

E. Valves

(1) Valves shall be located at not more than 500' intervals in commercial, industrial and high density residential areas and at not more than 1,000' intervals in all other areas. The MCUD Director, or designee, may approve alternative valve spacing.

(2) Appropriate valving shall also be provided at all water main intersections to ensure effective isolation of water lines for repair, maintenance, or future extension.

(3) Hydrants or automatic air relief valves shall be provided at high points in water mains to remove accumulated air. Automatic air relief valves or hydrants shall not be used where flooding of the

manhole or chamber may occur.

F. Drainage chambers, pits or manholes containing valves, blow-offs, air relief valves, meters, or other such appurtenances shall not be connected directly to any storm drain or sanitary sewer.

G. Disinfection of any part of MCUD water distribution system which has direct contact with finished water and has been out of service for repair, alteration, or replacement shall be as outlined in Section 7.5 and as specified by DOH.

Sec. 6.15.5 Water Services and Connections.

A. No service or connection to a Marion County system shall be made until payment of applicable fees and charges is received by MCUD.

B. Water services and connections shall conform to the applicable provisions of the code. Where water services greater than 12" are required, dual services shall be provided.

C. Water services and connections to existing County systems up to 4" are available from MCUD. Services and connections to new water systems, and to existing systems that are 6" and larger, shall be made by the contractor.

Sec. 6.15.6 Water Metering.

A. All water service connections to centralized and decentralized systems shall be metered. The method of metering will follow the guidelines listed below. The engineer must obtain approval from MCUD before finalizing the design of the metering system.

(1) Single family and duplex residential units and subdivision lots with public or private rights-of-way or easements shall be individually metered. Single services shall be installed at property lines; double services shall be installed at property corners. Service placements shall not disturb survey monuments, if present.

(2) Commercial, industrial, and institutional projects shall be individually metered. Each unit within a structure shall be individually metered.

(3) Multi-family, apartments, and condominium projects shall meter each unit.

B. Meters shall be located in the public rights-of-way, or as approved by MCUD.

C. Size of all meters shall be determined in accordance with current AWWA Standards.

Sec. 6.15.7 Cross Connection Control and Backflow Prevention.

A. General

(1) All rules, regulations, and procedures embodied herein shall be consistent with the Recommended Practice for Backflow Prevention and Cross-Connection Control, American Water Works Association Manual 14, as amended, and Florida Building Code as adopted by Marion County. Except as otherwise indicated, backflow protection at service connections shall be at least as stringent as recommended in the American Water Works Association Manual 14.

(2) All reduced pressure principle assemblies and double check valve assemblies shall be tested annually.

(3) All dual check devices shall be overhauled and/or replaced at least every five years at the customer's expense.

(4) All costs of installation, maintenance, and testing of backflow prevention devices shall be the responsibility of the customer.

(5) Any backflow prevention assembly required herein shall be a model and size approved by MCUD.

(6) If any conflict should exist between a provision of the manual and the provisions of this ordinance, the LDC, the Florida Building Code as adopted by Marion County, the Florida Safe Drinking Water Act, or any other State or County statute, ordinance, rule, or regulation applicable

to public water systems, the more restrictive provision shall apply.

B. Applicability. All water service connections to MCUD shall comply with the provisions of this code.

C. Residential backflow prevention requirements.

A backflow preventer shall not be required at service connections to residential premises where the plumbing system complies with current Florida Building Code requirements, and there is no auxiliary or reclaimed water system, no fire protection system, no irrigation system, no solar hot water system, and/or no swimming pool, unless determined necessary by MCUD.

D. Residential auxiliary or reclaimed water system.

(1) Auxiliary water systems supplied with water from a private well; or reclaimed water systems supplied with reclaimed water from a 'closed' reclaimed water system, shall install one of the four backflow prevention options below:

(a) Reduced pressure principle assembly (tested annually);

(b) Reduced pressure vacuum assembly (tested annually);

(c) Double check valve assembly (tested annually); or

(d) Dual check device plus any one of the following measures:

1. well water testing;
2. premises inspections;
3. automated meter reading;
4. customer agreements; or
5. managed properties.

(2) Residential surface auxiliary water system or open reclaimed water system.

(a) Auxiliary water systems supplied with surface water; or reclaimed water systems supplied with reclaimed water from an open reclaimed water system, shall install one of the three options below:

1. Reduced pressure principle assembly;
2. Double check valve assembly plus any one of the following measures:
   a. premises inspections;
   b. automated meter reading;
   c. customer agreements; or
   d. managed properties.
3. Dual check device plus any two of the measures from 6.14.7.D.d.2 through 6.14.7.D.d.5 above.

(3) Well water testing:

(a) MCUD shall require the customer to provide a DOH approved laboratory, water quality test on the well water.

(b) The water quality test shall analyze for e-coli annually and shall analyze for nitrate/nitrite every five years.

(c) The customer shall utilize another dual check sub-option from 6.14.7.D.d.2 through 6.14.7.D.d.5 or install a reduced pressure principle assembly or a double check valve assembly, if water quality tests are positive for e-coli, or exceed the maximum contaminant level for either nitrate or nitrite.

(4) Premises inspections:

(a) MCUD shall maintain an agreement with the customer that allows for periodic inspections of

the premises and ensure that they inspect premises for cross-connections on a periodic basis not to exceed every five years. MCUD standard deposit receipt and service agreement meet this requirement.

(b) MCUD shall have an inspection protocol and an inspection form to be signed by the inspector and shall make completed and signed inspection forms available for review by the FDEP, DOH, the customer, and the public upon request.

(5) Automated Meter Reading (AMR):

If the system has installed AMR, or will do so within five years for existing premises, and uses AMR for all new premises, such AMR shall have the ability to detect backflow through the meter and either provide immediate notification of the backflow event or record the backflow data for transmittal or retrieval on at least a monthly basis.

(6) Customer agreements:

(a) MCUD and the customer shall sign an agreement that prohibits the customer from cross-connecting the customer's auxiliary or reclaimed water system to the customer's potable water system.

(b) The agreement shall stipulate penalties for discovered cross-connections. Penalties may include, but are not limited to, monetary fines, discontinuation of service, and/or a requirement for installation of a more protective back flow preventer.

(7) Managed Properties:

The third party's legal instrument establishing the restrictions shall be reviewed and kept on file by MCUD.

E. Fire Protection Systems.

(1) A reduced pressure principle assembly shall be required when a fire protection system is also connected to an auxiliary water supply or source or has provisions for introducing chemical additives or antifreeze into the system.

(2) A reduced pressure principle assembly or a double check valve assembly shall be required when a new closed (i.e. non-flow through) wet pipe sprinkler system, or new closed wet stand pipe system has no connections to auxiliary water supplies or sources and has no provisions for adding chemical additives or antifreeze.

(3) A reduced pressure principle assembly or double check valve assembly shall be required for an existing closed (i.e. non-flow through) wet pipe sprinkler system, or existing closed wet stand pipe system, that has no connection to an auxiliary water supply or source, and has no provisions for introducing chemical additives or antifreeze into the system.

(4) No backflow prevention device shall be required if the sprinkler or stand pipe system is provided with a lead free alarm check valve.

(5) Temporary connection to fire hydrants shall be metered and have a dual check valve assembly.

F. Irrigation Systems.

(1) A reduced pressure principle assembly shall be required if the irrigation system is connecting to an auxiliary water supply or source or has provisions for introducing chemicals into the system.

(2) A reduced pressure principle assembly or a pressure vacuum breaker assembly shall be required for irrigation systems that have no connections to an auxiliary water supply or source, and have no provisions for introducing chemicals into the system.

G. Solar Hot Water Systems.

(1) If the solar hot water system is equipped with double wall heat exchanger and leak detection, no additional backflow prevention devices are required.

(2) A reduced pressure principle assembly shall be required for all solar hot water systems not having double walled heat exchangers and leak detection.

H. Multi-story Buildings. All buildings with three or more floors shall install a reduced pressure principle assembly.

I. Commercial Backflow Prevention Program Requirements.

(1) All commercial and industrial customers connected to MCUD shall install backflow prevention devices according to the AWWA Manual 14, as amended.

(2) Developers are required to coordinate selection of the device with MCUD.

J. Evaluation Assessment.

(1) The construction plans shall be reviewed to ensure that backflow prevention has been appropriately addressed in accordance with Florida Building Code, Plumbing Sections 601 through 613.

(2) All new service connections shall be assessed before providing water service to the service connections.

(3) Existing service connections shall be assessed whenever there is a change in the customer of record.

(4) All existing service connections shall be assessed at least once prior to December 31, 2016.

(5) Non-community water systems that are reclassified as a public potable water system on or after the effective date of this code shall assess all existing service connections at least once within two years after the non-community water system is reclassified as a public potable water system or by December 31, 2016.

(6) Assessments may be made by use of a questionnaire or inspection as appropriate.

K. Cross-Connection Control Program Recordkeeping.

(1) MCUD shall keep records of service connection assessments as follows:

(a) A record of the latest assessment questionnaire or inspection report for each service connection indefinitely;

(b) Actual questionnaires or inspection reports may be kept or information may be transferred to tabular summaries.

(2) MCUD shall keep an up-to-date inventory of all backflow preventers installed at service connections and at locations where fire protection systems, irrigation systems, and solar hot water systems are connected internally to the customer's potable water system.

(3) For each such backflow preventer, the inventory shall include:

(a) The location of each backflow prevention device;

(b) A description of the hazard being contained or isolated by the device;

(c) The type of backflow prevention device;

(d) The installation date and date of last repair; and

(e) The records of backflow prevention device testing for at least five years with the following information:

1. Identification of the backflow prevention device;
2. The name of the tester; and
3. The test results.

(4) Actual test reports may be kept, or information may be transferred to tabular summaries.

(5) MCUD shall keep annual cross-connection control program activity reports and backflow incident reports for at least 10 years as required by FAC 62-555.

L. Public Education Procedures.

(1) MCUD shall include a brief description of their cross-connection control program in their annual consumer confidence reports, as required by FAC 62-550.824.

(2) Educational brochures shall be provided to all existing customers prior to December 31, 2016 and to all future applicants for water service.

M. Incident Response and Investigation Procedures.

(1) MCUD shall report by telephone and speak directly to a person at the appropriate FDEP District Drinking Water Office or to MCHD as soon as possible, but no later than noon of the next business day after discovery of a backflow incident or prohibited connection.

(2) Within one month after discovery of a backflow incident, public potable water system operators shall prepare and submit to the appropriate FDEP district office or MCHD, a written backflow incident report that includes the following information:

(a) The date and approximate time of discovery of the backflow incident;

(b) The source and cause, or suspected source and cause of the backflow incident;

(c) The type and concentration of contaminants or foreign substances found within the public water distribution system or the customer's potable water system as a result of the backflow incident and the portion of the public water distribution system affected by the incident;

(d) The precautionary and corrective actions taken in response to the backflow incident and the date and approximate time of completion of each action; and

(e) The number and type of illnesses or physical health problems reportedly resulting from the backflow incident, to the extent known by the public potable water system.

N. Prohibited Acts.

(1) No individual or entity shall complete or maintain any cross-connection to a MCUD system, or cause such a cross-connection to be completed or maintained.

(2) No connection to a MCUD system shall be performed or maintained by, for, or on behalf of the public potable water system unless the applicable on-site facilities of the customer or of the applicant for such connection are in compliance with the provisions of this Code.

(3) There shall be no direct or indirect prohibited cross-connections, either existing or potential, between a safe public potable water system and an unsafe, non-potable supply, on the customer's side of the service connection.

(4) Modification of any backflow prevention assembly shall be prohibited.

O. Inspections.

(1) Inspection personnel may, with the customer's permission, inspect the private water systems of each customer's service address to determine the degree of hazard existing at the service address, and to ascertain compliance with the provisions of this ordinance and of related codes and regulations.

(2) If the customer denies inspection personnel reasonable access for such inspections, MCUD may cause the installation, at the customer's expense, of the backflow prevention assembly or device(s) commensurate with the degree of hazard anticipated by inspection personnel for the water service connection.

(3) If the customer denies reasonable access to perform such installations, MCUD may interrupt potable water service to any private water system connected to its public potable water system until such time that access is granted or a licensed installation or certified inspection is provided by the customer.

Table 6.15-1 Inspection schedule for installation of backflow preventers

Type of Service	Schedule
New connections with cross-connection hazards	Before service is initiated
Existing connections with WAC 246-290-490* Table 9-type hazards and other high cross-connection hazards	Within 90 days after notification
Existing connections with other than WAC 246-290-490* Table 9-type hazards or other high cross-connection hazards	Within 180 days after notification
Existing fire protection systems using chemicals or supplied by unapproved auxiliary water source	Within 90 days after notification
Existing fire protection systems not using chemicals and supplied by purveyor's water	Within 1 year after notification

*Washington State Administrative Code (WAC)

P. Backflow Prevention Assembly Testing.

(1) Certification of backflow testers.

(a) All approved backflow testers must possess a current AWWA and/or American Backflow Prevention Association (ABPA) Backflow Tester certificate.

(b) Any backflow tester performing testing within Marion County shall maintain current status on MCUD's approved tester list. This list is comprised of certified testers that have provided a copy of their current certification and an annual calibration report for their test equipment.

(c) Test reports from unapproved backflow testers will not be accepted by MCUD and will not meet the requirements of this ordinance.

(2) Testing.

(a) Employees of Marion County are prohibited from testing privately owned backflow devices in the County, except as part of their official duties.

(b) Each testable reduced pressure principle assembly or double check valve assembly shall be professionally tested at least annually or as frequently as deemed necessary (for high hazards) by an approved backflow tester.

(c) The customer shall have the appropriate test conducted and shall submit the results to MCUD.

(d) MCUD shall provide written notice to their customers of the requirement for the test and the date that the test results are due. All testing shall be performed in accordance with the AWWA Manual 14, as amended.

Q. Backflow Prevention Assembly Repair or Replacement.

(1) Each testable reduced pressure principle assembly or double check valve assembly found to be functioning improperly shall be repaired or replaced at the customer's expense by a certified backflow installer.

(2) If any customer fails to provide the cross-connection control coordinator with proof of a passing certified test after repair or replacement, MCUD shall cause the repairs and test to be performed. Such repairs and testing shall be completed at the customer's expense.

(3) If the customer denies reasonable access to perform such repairs and testing, MCUD shall interrupt potable water service to the private water system(s) at the service address until such time that either access for or evidence of the passing certified test is provided by the customer.

R. Emergency Acts.

(1) MCUD shall interrupt water service to any private water system when necessary to prevent continued or potential backflow or cross-connection from a prohibited connection, until the

requirements of this Code have been met.

(2) MCUD shall provide advanced notice of each interruption of service required by this Code, when possible.

(3) In the event of known pollution or contamination of a public potable water system or a customer's private water system due to backflow on or from the customer's service address, the customer shall promptly take reasonable steps to confine further pollution or contamination of the public potable water system and shall immediately notify MCUD.

S. Enforcement.

(1) The party or parties responsible for a violation of this Code shall be liable for all expenses, losses, or damage, including attorneys' fees and legal costs, incurred by the County by reason of such violation, including all costs and expenses associated with the interruption and restoration of potable water service for the service address where the violation occurred.

(2) If MCUD determines that a violation of this Code has occurred, MCUD may:

(a) Determine the actions necessary and appropriate to correct such violation;

(b) Determine the party or parties responsible either in whole or in part for such violation and require correction thereof;

(c) Determine the amount of any expense, loss, or damage incurred by the public potable water system as a result of such violation; or

(d) Assess the responsible parties for such amounts.

(3) In addition to any penalty or remedy provided by law for a violation of the provisions of this Code, the County may petition a court of competent jurisdiction to enjoin, restrain, or otherwise prevent any such violation or to recover expenses, losses, or damages pursuant to Section 6.14.7.R.1.

T. Penalties.

(1) MCUD shall send a written reminder notifying the owner or authorized agent that the backflow prevention device or devices must be tested.

(2) The first letter shall give the customer 30 days for the test to be completed.

(3) Upon failure of the owner or authorized agent of the owner of the building or premises to have the device tested, a second letter shall be sent, via certified mail, explaining that if the test is not completed within 30 days there is a possibility of discontinuance of water service.

(4) Upon failure of the owner or authorized agent of the owner of the building or premises to have the device or devices tested after the second letter, a third letter shall be sent via certified mail according to the conditions set forth under Ch. 162 FS. The third letter shall contain a date the water service will be discontinued.

(5) Reconnection shall only be allowed with the submission of the successful backflow performance test results and payment of applicable fees.

Sec. 6.15.8 Water Well Standards.

A. Well Casings

(1) Selection of temporary casings used only for construction shall be at the discretion of the contractor unless otherwise specified by the MCUD.

(2) Permanent well casings shall be continuous and watertight from top to bottom of the casing except for well screens.

(3) Permanent protective casings shall be provided for all types of well construction.

(4) All well casings shall be Carbon Steel, unless otherwise required by MCUD.

(5) All well casing manufacturing shall comply with the applicable ASTM, API, ANSI and AWWA standards.

(6) Minimum well casing criteria shall comply with latest AWWA Standards (A-100-06).

B. Casing Diameters.

Table 6.15-2 Minimum Casing Diameters

Maximum Horizontal Dimension on Pump Assembly	Minimum Inside Diameter of Well Casing
4”	5”
5”	6”
6”	8”
8”	10”
10”	12”
14”	16”
16”	18”

C. Drive shoes.

Special, steel drive shoes shall be heat treated (Rockwell C Hardness 30-32) SAE 1040 steel ring or equal.

D. Installation.

(1) Method of installation shall be at the option of the drilling contractor, provided the installation process does not alter the shape, size, configuration, or strength of the casing as called for in this section.

(2) Seating or sealing of well casings shall conform to FDEP regulations.

E. Completion of well sites.

(1) Contractor shall use reasonable precautions to prevent either tampering with the well or the entrance of foreign material or surface water into the well, at all times during the progress of the work.

(2) Contractor shall install a suitable threaded, flanged, or welded cap or compression seal to prevent any surface pollutants from entering the well upon completion of the well.

(3) The watertight casing of any well shall extend not less than 24” above the final ground level elevation and not less than 24” above the one percent (100-year) flood level of record, whichever is higher.

(4) Any equipment that will permit direct open access to the well shall also meet the height requirements and shall be sealed or screened to prevent entrance of foreign matter, surface water, or contaminants into the well.

F. The ground immediately surrounding the top of the well casing shall be sloped away from the well to prevent surface runoff from entering the completed well.

G. Well Screens.

(a) The diameter of the well screen selected shall be the minimum size permitted that will maintain an aperture (slot) entrance velocity of 0.1 -1.5 fps or less and a vertical velocity not greater than 5 fps as determined in conjunction with the screen length formula below, based on the maximum flow in gallons per minute specified. In the event it is anticipated that the pump setting will be into or through the screen, the minimum inside diameter of the screen shall conform to Table 6-14.1. The actual design aperture entrance velocity shall be subject to approval of state and local regulatory agencies.

(b) Screen Length.

1. The minimum length of a well screen shall be determined by the following formula:

   $L = Q/(A_c * V_c * 7.48)$

   Where:

   L = Length of screen (feet)

   Q= Maximum Flow (gpm)

   A_c = effective aperture area per foot of screen in square feet (The effective aperture area shall be taken as one half the total aperture area) (square feet/foot)

   V_c = design entrance velocity (fps)

2. Other factors must be considered specifically for each individual well installation.
   a. Information on the character of the water-bearing formation must be evaluated for proper well design.
   b. When cost factors have limited the acquisition of additional aquifer data, a more conservative design criteria for entrance velocities is recommended.
   c. Approach velocities, turbulent versus laminar flow, and velocity distribution, both into the screen and through the aquifer, are not automatically taken into account by the usual screen design criteria.
   d. Screen length for a highly efficient well is determined by thickness and hydrogeologic character of the aquifer.

(c) Screen aperture size.

1. For naturally developed wells, screen apertures shall be sized in accordance with the following criteria:
   a. Where the uniformity coefficient of the formation is greater than six, the aperture size shall be that which retains 30 to 40 percent of the aquifer sample;
   b. Where the uniformity coefficient of the formation is less than six, the aperture size shall be that which retains 40 to 50 percent of the aquifer sample;
   c. If the water in the formation is corrosive or the accuracy of the sample is in doubt, select a size that will retain 10 percent more than is indicated in the preceding paragraphs; and
   d. Where fine sand overlies coarse sand, use the fine-sand-size aperture for the top 2’ of the underlying coarse sand. The coarse-size aperture shall not be larger than twice the fine-sand size.
2. For gravel-packed wells, the screen-aperture openings shall be of such size to retain between 85 and 100 percent of gravel-pack material.
3. The total aperture area of the well screen shall be that which will result in entrance velocities equal to or less than the casing velocities achieved from the diameter set forth in Table 6.14.1.

(d) The well screen and its fittings shall be fabricated of Type 304 stainless steel unless otherwise specified.

(e) Screens shall be designed to minimize the possibility of damage during installation, development, and use. The contractor shall submit screen strength specifications (for example, collapse and tensile strength) as well as supporting drawings and data to the owner.

(f) Well screens shall be constructed by one of the methods described below, unless otherwise indicated by MCUD.

1. In punched or louvered pipe screens, adjacent openings shall be punched in pipe in such a way that no material is removed from the pipe wall. The spacing and size of openings shall be uniform.
2. Wire-wound, continuous-slot well screen shall be of all-welded construction.
   a. Special shaped wire shall be helically longitudinal rods and welded at each point of intersection.
   b. The inlet-slot openings between adjacent turns of the outer wire shall widen inwardly so as to be nonclogging.
   c. Screen end fittings shall be made of the some material as the screen body and shall be securely welded to each screen section.
   d. Pipe conforming to the required well casing shall be perforated with uniformly spaced and sized round hole openings. Telescoped over this shall be a continuous-slot, Type 304 stainless steel screen.

(g) Screen Joints and Spacers.

1. Joints between screen sections and blank pipe spacers shall be welded or threaded and shall be sand tight, straight, and as strong as the screen itself.
2. Spacers between screen sections shall be of the same material as that used for the casing if greater than 5’ long. If less than 5’ in length, they shall be made of the same material as the screen.
3. Joints between the well screen and the casing shall be sand tight and made by any one of the methods below:
   a. A nonmetallic seal of neoprene or rubber made to fit the casing surrounding the screen shall be attached to the screen or screen casing to affect the seal, and the screen or screen casing shall extend at least 2’ into the exterior casing; or
   b. A lead packer shall be expanded to fill the space between the screen and the casing. This lead packer shall be manufactured for this purpose and be attached to the screen or screen casing; or
   c. The space between the screen casing and the casing shall be filled with neat cement to form a seal at least 1.5” thick and 3’ in length.
4. Where the construction of the well is of the gravel-packed type, the screen casing overlaps at least 50‘ into the casing above, and the space between the two is filled with gravel, no other seal will be required unless specified by state or federal regulations.
5. When the screen and casing are one continuous unit from the bottom of the well to the top of the well, joints shall be approved by MCUD.

(h) Sealing the bottom of the screen.

1. The bottom of the deepest screen or screen casing shall be sealed by any one of the methods below:
   a. A threaded or welded plate shall be installed at the bottom of the screen or well casing extension. The plate shall be made of the same material as that used for the screen or the well casing to which the plate is attached; or
   b. A self-closing valve shall be installed at the bottom of the screen or casing and shall then be covered by a cement plug at least 1’ deep.

(2) Gravel Pack.

(a) Thickness and Location.

1. Selection of the gravel pack thickness surrounding the screen shall depend on individual

aquifer characteristics.

a. Minimum thickness to allow for proper placement of gravel pack shall be 4";

b. The maximum gravel pack thickness shall not exceed 12".

2. Placement of the gravel filter shall be made in locations adjacent to the well screens and shall extend above the screen at least 20'.

(b) Material and Impurities.

1. The gravel pack material shall have an average specific gravity of not less than 2.5.
2. Not more than one percent, by weight, of the material shall have a specific gravity of 2.25 or less.
3. Thin, flat, or elongated pieces of gravel, the maximum length dimension of which shall not exceed three times the minimum width, shall not be in excess of two percent, by weight.
4. Not more than five percent of the gravel shall be soluble in hydrochloric acid.
5. The material shall be washed and free of shale, mica, clay, dirt, loam, and organic impurities of any kind.
6. The materials shall contain no iron or manganese in a form or quantity that will exceed potable water standards.

Sec. 6.15.9 Wellfields and Water supply.

A. Groundwater Protection.

(1) The wellhead protection area zones shall comply with FAC 62.555 and all applicable Marion County requirements.

(2) The wellhead protection area zones shall be indicated for the proposed well or wellfield location indentifying the existing surrounding uses.

(3) Necessary precautions shall be taken to prevent contaminated water, or any other contaminates, from entering the water source, either through the well opening or by seepage through the ground surface.

B. Surface water intake facilities design.

(1) Facilities shall comply with the design and installation requirements as established by FAC 62.555. The criteria set forth in the Ten State Standards - Recommended Standards for Water Works should be used as a design guide for the intake structures.

(2) Additional design standards and requirements stated in this Code shall also apply.

C. Investigation of geologic/hydrologic conditions and groundwater quality.

(1) Geologic/hydrologic conditions and groundwater quality analysis shall be performed in accordance with FDEP and water management guidelines.

(2) All analysis shall be reviewed and approved by a professional engineer or qualified geologist.

Sec. 6.15.10 Water treatment plants.

A. Non-MCUD water treatment plants shall comply with FDEP and DOH requirements.

B. MCUD owned water treatment plants shall be designed in accordance with FDEP, DOH, Ten State Standards - Recommended Standards for Water Works, Florida Building Code, Florida Fire Prevention Code, and MCUD specifications. MCUD shall determine the sizing of the plant, water storage requirements, and pumping capacity, on a case-by-case basis, as determined by an engineer.

C. Hydropneumatic tanks shall be ASME approved and steel construction. The tank and compressed air system shall be as specified by MCUD.

Division 16 Wastewater Facilities

Sec. 6.16.1 Purpose and Intent.

This division sets forth the general requirements for the design of a wastewater system.

Sec. 6.16.2 Decentralized systems.

A. The decentralized WWTP shall be designed in compliance with FDEP and FDOH requirements and shall be constructed on a dedicated utility site, which will be preserved and protected for the WWTP, until connection to a centralized system is available.

B. A decentralized WWTP which applied for a permit from Marion County after August 1, 2009, as per Ordinance 09-17, shall be taken out of service, deeded, or reclassified under any of the following conditions, which may be appealed to the DRC:

(1) The decentralized system owner will be responsible for providing the surveying, design, permitting, and construction of all components necessary to connect the decentralized wastewater system to the centralized system. After connection, all components of the wastewater system will be owned, operated, and maintained by the centralized system owner; or

(2) The MCUD Director and a centralized system owner has determined the WWTP is suitable for expansion or inclusion into the centralized system owners Public Service Commission (PSC) territory, the WWTP property and all improvements shall be deeded to the centralized system owner and reclassified as a centralized system; or

(3) If the MCUD Director determines that the size, location, or other factors show the decentralized system is not feasible for connection or inclusion into a franchised territory, the system will be reclassified as a centralized system. The reclassified system must be operated and maintained by an FDEP approved service company.

Sec. 6.16.3 Treatment Standards

A. The treatment standards shall apply to all centralized and decentralized Wastewater treatment facilities (WWTF) in the SPZ.

B. Any new or expanded WWTF shall meet the following applicable annual average effluent concentrations for Total Nitrogen (TN):

Table 6.16-1 Total Nitrogen

Designed Average Daily Flow (in gallons per day)	Effluent Disposal System		
	RRLA	SRLA	PAR
Primary Protection Zone			
Greater than or equal to 500,000	3 mg/L	3 mg/L	10 mg/L
Less than 500,000 but greater than or equal to 10,000	3 mg/L	6 mg/L	10 mg/L
Less than 10,000	10 mg/L	10 mg/L	10 mg/L
Secondary Protection Zone			
Greater than or equal to 500,000	3 mg/L	3 mg/L	10 mg/L
Less than 500,000 but greater than or equal to 100,000	3 mg/L	6 mg/L	10 mg/L
Less than 100,000 but greater than or equal to 10,000	6 mg/L	6 mg/L	10 mg/L
Less than 10,000	10 mg/L	10 mg/L	10 mg/L

C. If a facility is permitted by MCHD, then the system shall comply with the requirements under FAC 64E-6, Part IV, and this section, otherwise it shall comply with the requirements of the FDEP and this section.

D. By January 1, 2019, the owner of an existing WWTF using Rapid-Rate Land Application (RRLA) as a primary disposal system shall:

(1) Connect to a central sewer system that does not utilize a RRLA disposal system; or

(2) Meet a 10 mg/L TN effluent limitation and either convert to a Slow-Rate Land Application (SRLA) system approved by the FDEP (including as an option a subsurface drip Irrigation system); or

(3) Convert to a public access reuse (PAR) disposal system; or

(4) Meet the following annual average reclaimed water limitations for TN:

(a) 3.0 mg/L for facilities having a DADF equal to or greater than 100,000 gpd; or

(b) 6.0 mg/L for facilities having a DADF less than 100,000 gpd.

(5) A waiver from these limitations may be requested provided the permittee or permit applicant makes an affirmative demonstration, based on relevant water quality data, physical circumstances, or other credible information, that the discharge of reclaimed water has not and will not result in more than a ten percent increase in background groundwater nitrogen concentrations at the disposal location.

E. An affirmative demonstration shall include a site specific study based upon the following factors:

(1) The proximity to a spring, and natural and manmade interconnected surface and subsurface features.

(2) Ground water flow gradient.

(3) Discharge volume.

(4) Ground water quality data.

(5) Site-specific geological conditions.

F. Effluent and Residuals Disposal.

(1) A RRLA system may also be permitted in the Primary SPZ provided the following:

(a) The WWTF is designed and permitted to utilize public access reuse and proposes to use a RRLA system only temporarily, until such time that 50,000 gpd or more is being generated, at which point the system shall serve solely as back-up as set forth under subsection b.,

below; or

(b) The system is used solely as back-up to a PAR system. In order to qualify as a back-up system, no more than 30 percent of the total annual flow may be directed to the back-up RRLA system if the WWTF is permitted to meet an annual average TN limitation greater than ten mg/L, and no more than 50 percent of the total annual flow may be directed to the back-up RRLA system if the WWTF is permitted to meet an annual average TN limitation of six mg/L or less.

(c) The WWTF is designed and permitted to meet the applicable effluent under subsection B, above.

(2) New SRLA systems with restricted public access shall be limited to dedicated sprayfields.

(3) All new and existing sprayfields shall be planted to hay or other sod-forming vegetation. During winter months, the sprayfield shall be over-seeded with ryegrass or winter-hardy grass to promote year-round nutrient uptake.

(4) Any WWTF that provides PAR shall institute a program to educate the end user about the value and benefits of reuse. The program shall be designed to enable the user to easily calculate the amount of nitrogen was applied to the disposal area and, therefore, promote reduced use of purchased sources of nitrogen. The owners of the WWTF shall coordinate such program efforts with the County.

(5) Monitoring.

(a) On or before December 31, 2009, the owner or operator of any new or existing WWTF with a DADF of 10,000 gallons or more shall test for effluent nitrate as N and TN at the point of discharge.

(b) Effluent nitrate as N sampling shall be performed at regular (i.e. non-selective) intervals at least monthly, except that TN sampling for facilities with a DADF less than 100,000 gpd may be performed quarterly.

(c) All test results shall be reported to the Zoning Official. Either the FDEP discharge monitoring report, or document provided by the Zoning Department may be used. This provision shall not be construed to require additional monitoring if the WWTF, as a condition of its FDEP permit, is already required to comply with comparable or more intensive requirements, nor shall this requirement apply to any facility that will, according to a County-approved five-year Capital Improvement Plan, be abandoned and/or connected to a central sewer system.

Sec. 6.16.4 Wastewater collection systems.

A. Design Criteria

(1) The County will approve plans for new wastewater systems and extensions only when designed as separate systems in which precipitation, runoff and groundwater are excluded.

(2) Sewers systems shall be designed with the following minimum peak factors.

Table 6.16-2 Minimum Peak Factors*

Flow Range	Peak Factor
Flows to 100,000 GPD	4.0
100,000 GPD to 250,000 GPD	3.0
Flow greater than 1,000,000 GPD	2.5

*Peaking factors less than 2.5 may be considered for ADF above 2 MGD, if substantiated by data provided by an engineer.

(3) Pipe shall be located in dedicated rights-of-way or utility easements.

(4) Pipe located outside of dedicated rights-of-way shall require a minimum 20’ easement. If a pipe is located adjacent to a road right-of-way, a minimum 10' easement shall be provided. Additional easement widths shall be provided if the pipe size or depth of cover so dictate.

(5) Gravity sewer shall be located under pavement unless otherwise authorized by MCUD.

(6) Pipe shall not be placed under or within 10’ of retention ponds, retention pond berms, or any vertical structures. Sewers shall not be located along side or rear lot lines.

B. Gravity Sewer

(1) No gravity sewer main conveying wastewater shall be less than 8” in diameter.

(2) The minimum cover over gravity sewers shall be no less than 3’ calculated from the finished grade. Exceptions to this requirement may be made for a short length of pipe where structural considerations are incorporated in the design.

(3) All sewers shall be designed and constructed to give minimum velocities, when flowing full, of not less than 2 fps, based on Manning's Formula using an "n" value of 0.013. The following minimum slopes shall be provided:

Table 6.16-3 Minimum Slopes

Sewer Size	Minimum Slope in feet per 100 feet
8”	0.40
10”	0.28
12”	0.22
14”	0.17
16”	0.14
18”	0.12
20”	0.11
24” and larger	0.08

(4) Where design velocities greater than 10 fps (only for peak instantaneous flows) are attained, due to topography or other reasons, special provisions shall be provided for sewer protection per Article 7.

(5) Sewers shall be laid with uniform slope between manholes.

(6) Size conversion between manholes shall not be allowed. All sewers shall be laid with straight alignments between manholes.

(7) Main drain and back wash systems for pools and spas and storm drain systems shall not connect to the gravity sewer system.

C. Manholes

(1) Manholes shall be installed as follows:

(a) at the end of each gravity sewer;

(b) at all changes in grade, size, or alignment;

(c) at all sewer intersections;

(d) at distances not greater than 400’;

(e) a manhole shall be located immediately within the right-of-way to separate private sewer systems from the MCUD sewer system; and

(f) where sewer extensions for future connections terminate.

(2) An outside drop pipe shall be provided for a sewer entering a manhole where the invert elevation is 24” or more above the manhole invert.

(3) The manhole invert shall be filleted to prevent solids deposition when the difference in elevation between the incoming sewer invert and the manhole invert is less than 24”.

(4) Minimum inside diameter of manholes

(a) Sewers 24” in diameter and smaller, the minimum shall be 48”.

(b) Sewers between 24” and 36”, the minimum shall be 60”.

(c) Sewers larger than 36” in diameter, minimum shall be 72”.

(5) A minimum access cover diameter of 24” shall be provided for all manholes.

(6) The flow channel through manholes shall be made to conform in shape and slope to that of the sewers. Vertical and/or horizontal flow direction changes in excess of 90° shall not be included in sewer alignments without MCUD approval.

(7) Manholes, frames, and covers shall be constructed as specified in Article 7.

(8) A MCUD approved lining shall be required on manholes receiving force mains.

(9) Inflow prevention lids shall be required for all manholes.

(10) Access shall be required to all manholes located outside of roadways consistent with Article 7.

D. Service Connections

(1) Service connection shall be through a service lateral.

(2) A cleanout shall be provided at the property line.

(3) Service laterals and fittings shall be a minimum of 6” in diameter. All service laterals shall be less than 100’ in length unless otherwise authorized by MCUD.

(4) Service laterals shall have a minimum slope of one percent.

E. Wastewater Force Mains

(1) Only 4", 6", 8", 10", 12", 16", 20", 24", 30", 36", 42", 48", and 54" diameter force mains shall be permitted.

(2) At design pumping rates, a cleansing velocity of at least 2.0 fps should be maintained. Maximum velocity at design pumping rates shall be determined by pipe material but in no case shall exceed 8 fps or exceed surge analysis in accordance with AWWA for ductile iron pipe (DIP) or PVC pipe. In no case shall velocity exceed surge allowances as per AWWA.

(3) Friction losses through force mains shall be based on the Hazen and Williams Formula. In the use of Hazen and Williams Formula, the value for "C" shall be 120 for DIP and 130 for PVC pipe. "C" values greater than 130 shall not be allowed. When initially installed, force mains may have a significantly higher "C" factor. The higher "C" factor should be considered only in calculating maximum power requirements and duty cycle time of the motor.

(4) The force main and fittings, including all restrained joint fittings and pipe restraints, shall be designed to withstand pump operating pressures and pressure surges, but not less than 100 psi. The design engineer shall determine the minimum length of pipe to be restrained on each side of the fitting.

(5) Force mains shall enter the gravity sewer system at a manhole not more than 1’ above the flow line of the receiving manhole and shall have an MCUD approved liner.

(6) Valves

(a) Valves shall be in a manhole or a valve vault.

(b) Valves shall be clearly delineated on the force main profile in the drawings.

(c) Valve spacing shall not exceed 2,000'.

(d) Valves shall be easily accessible.

(e) Valves shall not be subject to flooding.

(f) Air release valves, or air/vacuum relief valves, shall be provided as necessary.

(g) Plug valves shall be provided at both ends of all crossings so that the section can be isolated for testing or repair.

(h) Sufficient plug valves shall be provided on force main systems to facilitate effective isolation of the pipe system for repairs and maintenance as determined by MCUD.

(i) Gear actuators shall be in accordance with Article 7.

(7) Aerial and underwater crossings shall be subject to approval by MCUD.

(8) Material, installation, and testing shall be determined utilizing provisions of Article 7.

(9) A means for locating and identifying all force mains and valves shall be provided in accordance with the provisions in Article 7.

(10) Provision for the installation of permanent access points into and egress points out of the piping system for pigging and cleaning purposes shall be incorporated into 8" and larger force mains. Pigging ports shall be located and incorporated within the lift station sites as determined by MCUD.

Sec. 6.16.5 Wastewater Pump Stations.

A. Private Pump Stations shall be:

(1) Designed by an engineer and approved by FDEP;

(2) Not located directly adjacent to public thoroughfares; and

(3) Pump stations shall be located on fee simple tracts of land adjacent to rights-of-way, with the exception of private pump stations serving single owner properties.

B. Private Pump Stations with flow to a MCUD system shall be:

(1) Designed by an engineer and approved by FDEP and MCUD per Article 7;

(2) Not located directly adjacent to public thoroughfares; and

(3) Pump stations shall be located on fee simple tracts of land adjacent to rights-of-way, with the exception of private pump stations serving single owner properties.

C. Marion County pump stations shall be designed by an engineer, approved by FDEP, and conform to the following:

(1) Design

(a) Pump stations to be dedicated to and operated by MCUD shall be designed to MCUD specifications based on the size of the pump station.

(b) Pump stations shall have wet wells designed and constructed to serve the lowest developable point on all adjacent vacant tracts of land surrounding a project by means of gravity flow only. The appropriate sized utilities easement(s) shall be provided by the developer so the gravity wastewater mains from all surrounding tracts of land can easily be connected to the wet well of the pump station.

(c) The engineer shall submit the design and calculations for all wastewater pump stations to MCUD for review and approval. Calculations shall include:

1. High head and low head condition system curves plotted on the manufacturer's pump curve;

2. Hydraulic analysis of force main system including all friction and minor losses;

3. Operating cycles with wet well sizing; and

4. Buoyancy calculations.

(d) The design basis for all calculations shall provide for 60 percent of all receiving system pumps to be operating at design capacity at the time that the proposed pump station is to be operating.

(e) System curves shall verify that the pumps are operating at peak efficiency in accordance with the manufacturer's specifications and are suitable for the design flow application.

(f) Pump and motor selection shall be designed on the hydraulic grade line at the point of connection as based on the MCUD Master Plan and approved model for the utility service area affected by the proposed development.

(g) Each component of the pump station shall be designed to accommodate the development's design flow at the prevailing system conditions at the time of build out.

(h) Pump station structures, electrical equipment, and mechanical equipment shall be designed to be protected from physical damage by a 100-year 24-hour storm event. The bottom of all station control and electrical boxes shall be no lower than the one percent (100-year) flood plain flood elevation.

(i) Wastewater pump stations shall remain fully operational and accessible during a 100-year 24-hour storm event. The top elevation of the wet well shall be no lower than the one percent (100-year) flood plain flood elevation.

(j) The top elevation of the control panel shall not exceed maximum distance from the pump station's concrete pad that is allowed by Code, unless authorized by MCUD .

(k) The pump station site design shall ensure that positive stormwater drainage radiates outward from the center of the wet well to the boundaries of the site and away from the pump station site. Access driveways and roadways shall be designed to prevent stormwater conveyance onto the pump station site.

(l) The pump station and driveway shall be constructed in accordance with Article 7 and shall be readily accessible by maintenance vehicles during all weather conditions including a 100-year 24-hour storm event.

(m) A complete system for the control of odors shall be provided as required and specified by MCUD.

(n) A supervisory control and data acquisition capable control panel shall be provided and of type to match pump station configuration as specified by MCUD.

(2) Site and Location

(a) Pump stations shall be located on fee simple tracts of land adjacent to rights-of-way.

(b) No part of structure on the same side of the roadway, or less than 50' perpendicularly from the intersection of two or more rights-of-way.

(c) Permanent and temporary vehicular access to a pump station shall freely accommodate the turning movements of a 40' long and 9' wide single unit truck vehicle with a 28' wheelbase as specified by the Institute of Transportation Engineers. Vehicular backup distance shall not exceed 60'.

(d) Driveways to pump stations on residential roadways shall not be less than 30' in length from the pump station's gates to the adjacent roadway's edge of pavement or back of curb so as not to totally block both lanes of travel, unless approved by MCUD. The driveway length along all other roadways shall not be less than 45', unless approved by MCUD.

(e) Pump station sites shall be sized as delineated in the standard drawings for duplex and triplex stations per the pump station site plans.

(f) The developer shall dedicate the pump station site and driveway by plat or separate

instrument to MCUD. Dedicated easements shall be shown as specified on the pump station site plans in the standard drawings.

(g) A minimum 20' wide utility easement that provides for ingress and egress to the pump station shall be required.

(3) Pump stations shall be completely fenced to maintain and control access consistent with Article 7.

(4) Emergency pumping capability shall be provided for all pump stations per FAC 62-604, or as required by MCUD. Generator specification and installation shall comply with requirements of MCUD and Article 7.

Sec. 6.16.6 Water Reclamation Facilities.

The design of water reclamation facilities shall be designed according to FDEP BMPs, current compliance standards, and MCUD requirements.

Division 17 Reuse Facilities

Sec. 6.17.1 Purpose and Intent.

This division sets forth the general requirements for the design of a reclaimed water system.

Sec. 6.17.2 Applicability.

MCUD shall evaluate the availability of reuse and information provided by the applicant to make a determination if incorporation into MCUD's reclaimed water system represents a beneficial use of the reclaimed water resource. The developer may appeal the determination of MCUD to the DRC.

Sec. 6.17.3 Developer's Agreement.

An executed developer's agreement for reuse distribution (irrigation) systems shall be required prior to receipt of potable water and wastewater service, if project is required to connect to MCUD reclaimed water system.

Sec. 6.17.4 Design standards.

A. Approved and prohibited uses of reclaimed water shall comply with FAC 62-610, Reuse of Reclaimed Water and Land Application, Part III.

B. The water reuse potential of a project shall be based on the anticipated irrigation demand at an annual average irrigation rate calculated consistent with water management district guidelines.

C. Reclaimed water systems shall be designed to promote efficient reclaimed water usage and for the estimated ultimate irrigation demand, based on planned development build-out. The developer is responsible for sizing the mains within the development property limits (on-site). Individual single-family homes are exempt from providing design calculations for irrigation systems with one inch or smaller meters.

D. Reclaimed water mains outside the development limits (off-site) shall be sized using the flow calculations and peak hourly factor below:

(1) The weekly reclaimed water flow shall be based on a minimum of 1 inch per week over the proposed irrigated area of the property.

(2) Peak hourly factor.

(a) For commercial developments, the peak reclaimed water flow shall be calculated by dividing the weekly flow by the allowed days of irrigation per week and multiplying the result by a peak hourly factor of six. Irrigation zones shall be provided to uniformly distribute flows so that the maximum peak hourly factor is not exceeded. Alternate irrigation system designs will be evaluated on a case-by-case basis.

(b) For single family residential developments, the peak reclaimed water flow shall be calculated

by dividing the weekly flow by the allowed days of irrigation per week and multiplying the result by a peak hourly factor of six.

E. Design Calculations

(1) Project Engineer or Landscape Architect shall submit signed, sealed and dated hydraulic calculations with the master plan and the plans for all reclaimed water distribution projects. Calculations shall show sufficient hydraulic capacity to transport peak flows. All head losses and minor losses shall be included in the calculations.

(2) An engineering submittal for proposed on-site storage ponds shall be submitted to MCUD for review and approval. The submittal shall include two copies of construction plans and an engineering report supporting the pond design. The submittal must meet the requirements of MCUD, as well as FAC 62-610.

F. Location

(1) Reclaimed mains shall maintain a consistent alignment with respect to the centerline of the road when installed in rights-of-way.

(2) Reclaimed mains located outside of dedicated rights-of-way shall require a minimum 20' easement shall be provided if it is not adjacent to the road right-of-way.

(3) Reclaimed mains located adjacent to a road right-of-way shall have a minimum of a 10' easement.

(4) Additional easement widths shall be determined by MCUD, when necessary.

(5) Reclaimed mains shall not be placed under or within 10' of the high water line of retention ponds, retention pond berms, or any vertical structures.

(6) Reclaimed mains shall not be located along side or rear lot lines, except when approved by MCUD.

(7) Proposed commercial and residential development offsite mains shall be extended a minimum of 10' beyond the furthest entrance to the development.

Sec. 6.17.5 Reclaimed Water Metering.

(1) All reclaimed water service connections shall be metered.

(2) A master metering system is required when reclaimed water flow dictates installation of a 4" or larger meter. However, the engineer must obtain MCUD approval before finalizing the metering system design.

(3) Meter boxes shall not be installed in sidewalks, driveways or areas subject to vehicular traffic unless specifically approved by MCUD. Meters subject to vehicular traffic shall be installed in a traffic rated meter box.

(4) All commercial, industrial, institutional, shopping centers, apartments, and condominium projects shall require installation of one meter to service the entire development.

(5) Meters larger than 2" shall be installed by the developer. Installation of meters 2" and smaller will be performed by MCUD. Meters 1"or smaller in size will be installed underground in an approved meter box. Meters that are 1.5" and larger shall be installed above ground, within a utility easement adjacent to the public right of way.

(6) Size of all meters shall be determined in accordance with current AWWA Standards and MCUD approval.

Sec. 6.17.6 Non-residential Irrigation wells.

A. Existing or proposed wells may be utilized as a back-up supply of irrigation water in the case of an interruption of service from the reclaimed water system.

B. Existing or proposed wells shall be protected from reclaimed water entering the well by a MCUD

approved backflow prevention device.

Sec. 6.17.7 On-site storage.

A. On-site storage may be required when the supply pipe requirement is 2” or greater. The volume of the on-site storage ponds or tanks shall be equal to or greater than the annual average daily demand during a 24-hour period and MCUD approval.

B. On-site storage ponds shall be lined, operated and maintained by the pond owner.

C. The pond shall include a level control device to avoid overflow.

The pond reclaimed water meter assembly shall include a MCUD approved pressure sustaining valve to protect the system pressure.

Sec. 6.17.8 Backflow prevention. Backflow prevention requirements shall be in accordance with Section 6.14.7.

Division 18 Fire Regulations and Prevention

Sec. 6.18.1 Purpose and intent.

All developments and commercial occupancies shall comply with the most current Florida Fire Prevention Code, as adopted by the State of Florida.

Sec. 6.18.2 Fire flow.

A. For all subdivisions or commercial occupancies supplied by water systems, fire flow shall be supplied in accordance with the Insurance Services Office (National Board of Fire Underwriters) Fire Suppression Rating Schedule, "Needed Fire Flow" section. Reduced fire flow may be allowed if deemed appropriate by the Marion County Fire Rescue (MCFR).

B. All new developments and new or altered commercial occupancies over 1,200 square feet in size, excluding single-family residences or duplexes, shall provide a fire department water supply as follows:

(1) Fire hydrant connected to a decentralized or centralized water supply system;

(2) Direct fire line and fire hydrant connected to a decentralized or centralized water supply system;

(3) Dedicated water supply tank when a decentralized or centralized water supply is not available. The water tank size shall comply with National Fire Protection Association (NFPA) 1142, Rural Water Supply.

C. Fire hydrant locations shall comply with the following:

(1) A fire hydrant shall be located within 500’ driving distance of a commercial building.

(2) Fire hydrants shall be installed no greater than 1,000’ apart.

D. A fire department connection (FDC) shall comply with the following location requirements:

(1) Within 500’, driving distance, of commercial building.

(2) A minimum of 1.5 times the height of the building away from the building.

(3) Within 10 feet of a hard surface.

E. Private fire hydrants supplied by a fire pump shall be tested annually by a certified fire protection company and a copy of the flow paperwork and current contact information shall be provided to MCFR.

F. Newly installed fire hydrants shall have a blue reflective pavement marker on the roadway for easier identification of the hydrant location during nighttime operations. The blue reflector shall be placed in the center of the travel lane in front of the hydrant on the same side as the hydrant location.

G. All new and existing fire hydrants caps and bonnet shall be painted in accordance with NFPA 291, Recommended Practice for Fire Flow Testing and Marking of Hydrants.

(1) Fire hydrant barrels shall be painted as follows:

(a) Red barrel = fire hydrant supplied by public mains.

(b) Yellow barrel = fire hydrant supplied by private mains.

(c) Silver barrel = fire hydrant supplied by fire pumps.

(2) All draft hydrants shall be painted silver barrel with yellow caps and bonnets.

(a) Draft hydrants are standard fire hydrants but are supplied by a static water source. Normally these hydrants are not supplemented by a fire pump and rely on a fire department engine to draft from the source. These draft hydrants have little to no pressure and function similar to a dry hydrant tank.

(b) Signage shall be provided indicating “Draft Hydrant,” red background with a minimum 4” white reflective letters.

(3) All dry hydrant riser connections shall be painted red in color.

H. Dry hydrants permanently removed from service shall have the riser painted black in color. The standard 4.5 inch fire department connection shall be removed from the riser and the remaining pipe permanently capped. Removal of a dry hydrant from service must be approved by MCFR.

I. New residential developments that are not required to tie into fire line due to distance in accordance with this Code shall provide fire flow by one of the following:

(1) Install a central water system with a minimum of 6” fire line and fire hydrants placed every 1,000’; or

(2) Install a minimum 30,000 gallons storage tank(s) in accordance with NFPA 1142.

(a) Multiple tanks shall be connected.

(b) Tanks shall be connected to domestic water and the water level maintained using a ball float valve or other approved valve.

(c) It will be the responsibility of the owner to maintain operability of the system.

J. For residential subdivisions, water distribution systems and/or water main extensions shall be designed and constructed with the following requirements:

(1) Subdivisions with water systems

(a) New water systems or extensions of existing systems into new subdivisions shall be designed according to the provisions of NFPA Standard 24, latest version.

(b) Fire flow capacity shall be provided according to the following table:

Table 6.18-1 Fire Flow Capacity

Distance Between Buildings	Fire Flow
Over 100'	500 gpm
31' - 100'	750
11' - 30'	1000
10' or less	1500

(c) Needed fire flow is that amount of water, in gallons per minute, flowing in excess of the average peak domestic demand for two hours, with a residual pressure no less than 20 psi.

(2) Subdivisions with individual private wells

(a) Fire flow shall be provided through a system meeting the requirements of NFPA Standard 1142, Rural Water Supply.

(b) When a water system is installed in a subdivision having private wells, fire flow shall be provided in accordance with Subsection D.(1) above.

Sec. 6.18.3 Gated Communities and Gated Properties

A. With no exception, a siren activated switch shall be installed.

B. Alphanumeric keypad or "coded" gate access is a satisfactory, secondary/backup method for public safety access.

(1) Codes for developments and commercial occupancies shall be forwarded to MCFR for verification and forwarded to the public safety communication center/dispatch for inclusion into the dispatch database.

(2) New or updated codes shall be placed on a business or HOA letterhead and sent to MCFR Prevention Division.

(3) One and two family gate codes may be recorded into dispatch database at the request of the owner.

C. Gate shall have emergency release in the event of loss of power.

D. Signage shall be posted indicating how to access in the event of emergency.

E. Notification shall be made to MCFR once the gate is installed to arrange for testing and proper documentation.

F. It will be the responsibility of the owner to maintain operability of the system.

G. Minimum access shall have an unobstructed width of 20' and an unobstructed vertical clearance of not less than 13'6".

Sec. 6.18.4 Development in Wildland Urban Interface/Intermix Zones

When MCFR determines that existing or proposed improvements are located in a wildland urban interface/intermix area, a wildfire hazard severity analysis shall be provided for review and approval by the MCFR.

Sec. 6.18.5 Access Control Boxes

Access control boxes shall be as approved by the MCFR. Access control boxes allow the fire department to gain entry into the location in the event of activation of the fire sprinkler system or fire alarm system. The installation of an access control box will minimize damage to the location due to forcible entry methods used to investigate alarms.

A. Locations Which Require Access Control Boxes

(1) Any new commercial construction that contains a fire sprinkler system or fire alarm system.

(2) Any existing commercial building which installs a fire alarm system or fire sprinkler system due to a change of use or code requirement.

(3) Any existing commercial building that contains a fire alarm or fire sprinkler system that performs interior alterations or modifications which require a permit.

(4) Any existing commercial building that contains a fire sprinkler system or fire alarm system that has repeated nuisance activations as determined by MCFR Prevention Division.

B. Installation Requirements

(1) Access control boxes must be approved by the MCFR and ordered using the approved form obtained from MCFR.

(2) Access control boxes shall be installed 6' off the ground on the outside of the building. Installation

shall be near the main entrance unless prior approval is gained from MCFR Prevention Division.

(3) The owner/occupant shall be responsible for mounting and installing the box to the building.

(4) Installation of the access control box shall be completed prior to the final inspection by MCFR for building occupancy.

C. The owner/occupant shall ensure that a current key, and any additional keys necessary to access fire alarm panel rooms or fire sprinkler rooms, is provided to the MCFR, to be secured inside the box.

Division 19 Outdoor Lighting

Sec. 6.19.1 Purpose and intent.

The purpose of this division is to provide for effective and efficient nighttime lighting while minimizing light pollution, glare, and light trespass to conserve energy and resources while maintaining nighttime safety, utility, security, and productivity.

Sec. 6.19.2 Applicability.

A. All outdoor lighting shall be installed according to the provisions of this division, and all state and local electrical and energy codes.

B. All outdoor lighting installed after the adoption of this code (date) shall comply with requirements included herein, including but not limited to: new lighting, replacement lighting, or any other lighting whether attached to structures, poles, the earth, or any other location, including lighting installed by any third party. Exceptions to this division are:

(1) Lighting within a right-of-way or easement for the principal purpose of illuminating streets or roads. No exemption shall apply to any lighting within the right-of-way or easement when the purpose of the luminaire is to illuminate areas outside of the right-of-way or easement, unless regulated with a street lighting ordinance.

(2) Lighting for public monuments or statuary.

(3) Lighting solely for signs

(4) Temporary lighting for theatrical, television, performance areas, and construction sites.

(5) Underwater lighting in swimming pools and other water features.

(6) Low voltage landscape lighting.

(7) Temporary lighting and seasonal lighting provided that individual lamps area less than 10 watts and 70 lumens.

(8) Lighting that is only used under emergency conditions, or for hazard warning required by federal, state, or local authorities.

C. All lighting shall follow provisions of this division however, any special requirements for lighting listed below shall take precedence:

(1) Lighting specified or identified in a Special Use Permit.

(2) Lighting required by federal, state, or local law or regulations.

Sec. 6.19.3 Submittal requirements.

A. Exterior lighting systems shall be designed by a licensed professional as authorized by the State of Florida.

B. An exterior lighting plan which indicates the following is required for all development except single-family homes and duplexes:

(1) Signature and seal of the professional who prepared the plan;

(2) Locations of all proposed exterior lighting fixtures;

(3) Photometric data which covers the project site;

(4) Data table including:

(a) Mounting heights

(b) Fixture type

(c) Lamp technical specifications

(d) Description of lenses and optical systems

Sec. 6.19.4 Exterior lighting design standards.

A. Outdoor lighting shall be achieved by using the lowest wattage of lamp as possible to provide the amount of light needed according to standards provided by the Illuminating Engineering Society of North America (IESNA).

B. Lighting intensities for buildings, projects, or other uses not specifically regulated by this division (for example, athletic fields, courts, and swimming pools), shall be designed according to the standards provided by the IESNA. All such uses shall comply with this division for control of glare and light level at the property line by using hoods, visors, or similar shielding devices.

C. To avoid conflicts, locations of all light poles and fixtures must be coordinated with the location of all trees and landscaping whether existing or proposed as shown on the landscape plan. Vegetation screens may not be employed to serve as the means for controlling glare. Glare control must be achieved through the use of shielding, fixture mounting height, wattage, aiming angle and fixture placement.

D. Mercury vapor fixtures shall not be permitted.

Sec. 6.19.5 Lighting control requirements.

Controls shall be provided that automatically extinguish all outdoor lighting when sufficient daylight is available using a control device or system from a programmable lighting controller, building automation system, or lighting energy management system. All automatic systems shall have a battery or similar backup power or device.

Sec. 6.19.6 The following lighting requirements shall apply to all new developments excluding single family residences:

A. All lighting, regardless of location, shall be designed to prevent direct glare and light spillage onto adjacent streets and properties.

B. Maximum maintained illumination levels measured at finished grade on adjoining property within 25 feet of the property line of the project in question shall be no more than 1.0 footcandles if the adjoining property is zoned commercial and no more than 0.5 footcandles when the adjoining property is zoned residential or is an existing residential use within 100 feet of the property line.

C. All luminaries shall employ IESNA cutoff or full cutoff light distribution designations and shall be fully shielded fixtures, or flat lenses to reduce glare or spillage, with the following exceptions:

(1) Luminaries that have a maximum output of 260 lumens per fixture (the approximate output of one 20 watt incandescent bulb), regardless of number of bulbs, may be left unshielded provided that fixture has an opaque top.

(2) Luminaries that have a maximum output of 1,000 lumens per fixture (the approximate output of one 60 watt incandescent bulb), regardless of number of bulbs, may be partially shielded, provided the bulb is not visible, and the fixture has an opaque top.

D. Vehicular canopy lighting.

(1) Light fixtures mounted on the underside of a canopy must be recessed or shielded full cutoff type so that the light is restrained to 85 degrees or less from vertical.

(2) Lights may not be mounted on the top or sides (fascias) of the canopy.

(3) Canopy fascias may be illuminated from within only.

E. Mounting heights.

(1) Mounting heights shall be measured from the adjacent grade to the bottom of the luminous opening of the luminaire.

(2) Except as otherwise noted in this division, the height of an outdoor lighting fixture shall be a maximum of 16 feet.

(3) Mounting heights shall be in scale with the buildings on the project site; fixture heights shall not exceed the height of the building.

(4) In large parking areas (over one acre in size) and in vehicular use areas, mounting heights shall not exceed 30 feet in height.

(5) Lighting for recreation facilities such as, but not limited to, football fields, soccer fields, baseball fields, softball fields, and tennis courts, are exempt from the mounting height standards provided that all other applicable provisions are met.

F. Building-mounted luminaries may only be attached to the building walls. The top of building-mounted luminaire fixtures may not exceed the height of the parapet, or the roof, or 25 feet above the adjacent finish grade, whichever is lower. All wall mounted fixtures shall be a full cutoff type fixture.

Sec. 6.19.7 Lighting maintenance.

A. All new luminaries, including replacement of existing luminaries where housing structures and fixtures are replaced, must comply with the provisions and standards of this section.

B. Exceptions to this section are as follows:

(1) Emergency lighting required for public safety and hazard warning required by local, state or federal authorities.

(2) Outdoor lighting fixtures producing light directly by combustion of fossil fuel.

(3) Holiday lighting consisting of low wattage bulb of no more than 8 watts each.

(4) Lighting for roads.

Article 7 Construction Specifications and Design Details

Division 1 Roadway and Drainage Construction Specifications

Sec. 7.1.1 General conditions.

A. The regulations of this section control the requirements under which subdivision improvements and work in public and/or private right-of-way and other specified areas are to be permitted and constructed.

B. Any work proposed to be constructed in the right-of-way shall be reviewed and approved by the Office of the County Engineer through the applicable process established in Article 2 of this Code.

C. Maintenance of Traffic (MOT) plans shall be provided for review and approval prior to work commencing in the right-of-way. MOT shall adhere to the FDOT Design Standards and/or Manual on Uniform Traffic Control Devices (MUTCD), as applicable.

D. Any contractor performing work in a public or private right-of-way, or associated easements, shall be registered with the County through the Office of the County Engineer. Registration is to minimally demonstrate qualifications, certifications and insurance coverage in applicable areas that work is being performed.

E. The requirements herein are intended to be complete only to the extent of protection of the public interest. It should be noted that private road subdivision construction must also meet the minimum standards contained in the Code in order to provide reasonable assurance to the public that the improvements are not sub-standard and do not create an undue burden of maintenance expense on the private road subdivision residents.

F. The requirements included herein are considered only as the minimum standards. All proposed construction must be designed with full consideration given to the performance, functionality, structural suitability and durability, and regulatory compliance of the particular installation.

G. Construction details are provided in this Article and illustrate construction requirements of this Code.

H. The construction details provided herein are generally applicable to all construction, however the County Engineer may approve or require minor variations or adjustments to fit particular circumstances. Additionally, the project engineer may submit revisions to said detail(s) provided the detail is clearly shown within a 'cloud.'

I. The use of the term "or equal" shall also be interpreted to include the term "approved equivalent."

J. Unless otherwise specified, construction work shall conform to the technical provisions of the most recent version of Sections 100 to 900 of the FDOT Standard Specifications for Road and Bridge Construction as well as the most recent version of the FDOT Design Standards.

Sec. 7.1.2 Applicable documents.

Publications, codes, and specifications as hereinafter listed and referenced throughout these specifications are a part of these specifications to the extent of such reference. Reference is intended to refer to the latest revision or publication which has been officially adopted by the issuing agency. The term "State Road Department" when used in applicable sections of the FDOT Standard Specifications shall be interpreted to mean the Marion County Office of the County Engineer. References to payment methods and payment measurements therein are deleted. The latest edition of the following publications, unless otherwise specified, shall apply:

American Association of State Highway and Transportation Officials (AASHTO)

American Concrete Institute (ACI)

American Iron and Steel Institute (AISI)

American Society for Testing and Materials (ASTM)

Florida Department of Transportation (FDOT)

Standard Specifications for Road and Bridge Construction

Design Standards

Drainage Manual

Florida Method of Test for Moisture-Density Relations of Soils, Designation: FM 1 T-180

Manual on Traffic Control and Safe Practices for Street and Highway Construction, Maintenance and Utility Operations

Manual of Uniform Minimum Standards for Design, Construction and Maintenance for Streets and Highways (Greenbook)

Site Impact Handbook

Institute of Transportation Engineers Trip Generation Rate

Manual on Uniform Traffic Control Devices (MUTCD)

Water Management Districts

Southwest Florida Water Management District permitting documentation

St. Johns River Water Management District permitting documentation

Sec. 7.1.3 Construction specifications.

A. Improvements in the right-of-way, drainage easements, utility easements, subdivisions, and other areas being developed shall be provided in accordance with the details provided herein, the approved plans, and the listed publications, codes, and specifications, as applicable. Construction of public facilities and infrastructure shall not be accepted for the public maintenance unless it conforms to the provisions herein.

B. Changes to the work. No change to the work as shown on the approved plans shall be made without notification to and approval by the Office of the County Engineer.

C. Use of roads during construction. Roads being used by the public at the commencement of construction which provide the only ingress and egress shall be maintained in a passable condition. Should an alternate route be contemplated, it must be reviewed and approved by the Office of the County Engineer. All haul routes for construction purposes shall be reviewed and approved by the Office of the County Engineer. Existing county roads damaged during construction which lie between the subdivision under construction and the nearest collector/arterial road as designated on the approved haul route, shall be subject to maintenance and repair by the developer.

D. Location of utilities in public rights-of-way shall conform to those locations and burial depths shown in the details provided herein or as per this Code unless it can be shown that extenuating circumstances make it impossible or impractical to conform. All aerial utilities shall be a minimum height of 18 feet above centerline grade of roadway. If extenuating circumstances exist, communication and cable TV lines shall have 16 foot minimum vertical clearance. Utility companies are required to locate facilities within 48 hours of notice in county rights-of-way for design or construction purposes at no cost. The outside edge of all poles and above ground equipment shall be placed tangent to the right-of-way line or in an easement. As-built/record drawings shall be submitted at the completion of all utility work, certified as to horizontal and vertical location within the right-of-way and shall comply with Article 6 in survey section. For purposes of this section the term utility shall include, but not be limited to, cable television.

(1) Underground utilities placed under existing or proposed pavement shall be sleeved unless constructed of ductile iron or C-900 PVC main lines with mechanically restrained joints or as

authorized by the County Engineer. Utility sleeves shall extend a minimum of eight feet from the edge of the pavement toward the right-of-way lines.

(2) Utility sleeves, and carrier pipes for jack and bore operations, shall be constructed and installed in accordance with the details provided herein with the exception that where the nature of a particular utility is such that skids or braces are not necessary for a smooth and level installation. In this instance, said skids or braces may be eliminated and smaller diameter sleeves may be used, such as in the case of cable television, telephone, electric, natural gas, and water service lines.

(3) Directional drilling or jacking and boring of pipe under existing pavement is required. No jetting of pipe is permitted. Pavement cuts may be permitted subject to approval of the County Engineer as per the applicable sections of these specifications. Directional drilling shall meet the requirements of Section 555 of the FDOT Standard Specifications. Jacking and boring shall meet the requirements of Section 556 of the FDOT Standard Specifications.

(4) Cable for television, telephone, and electric may be placed directly into the sleeve and do not require a separate conduit. Additional empty sleeves may be installed to allow for future utility replacement or expansion by any utility company desiring to do so.

(5) Any costs associated with the installation of any sleeves shall be borne solely by the utility company or permit holder.

E. Driveways in public or private rights-of-way shall conform to details provided herein, and shall be constructed in accordance with the permit issued for construction or the approved plans. It is the applicant's responsibility to maintain the flow line of the swale and/or culvert unless specified otherwise on the permit or improvement plan for the subdivision. Driveways shall be constructed so as not to cause damage to the public road to which it connects, or interfere with or divert storm drainage, or create an unsafe traffic condition. If head walls are to be constructed in lieu of mitered end cuts on culvert pipe, they shall not extend vertically above the finish grade of the driveway. Headwalls are not permitted on roads with speed limit above 40 MPH. Headwall plans must be submitted along with the driveway permit application (or prior to commencement of construction) and the permit must be issued prior to commencement of construction. Driveways and associated features, including but not limited to culverts, mitered end sections, headwalls, etc., are the responsibility of the property owner and shall be maintained in a functional and safe condition.

F. Clearing and grubbing.

(1) Clearing and grubbing shall include the removal and proper disposal of, or portions thereof, all timber, brush, stumps, roots, grass, weeds and other such obstructions, above and to a depth of two feet below the finish grade in road rights-of-way, drainage retention areas, drainage rights-of-way, and other specified areas. Stumps shall be removed in their entirety from underneath the proposed roadway. This provision shall not apply to drainage retention areas if the project engineer designs the drainage system to accommodate the design storm without removal of existing trees.

(2) Disposal shall include the complete removal from rights-of way and other specified areas of the debris and unsatisfactory soils resulting from clearing and grubbing. Debris material shall not be buried onsite. Burning of combustible materials shall be permitted subject to approval of all governing agencies having jurisdiction. When burning, all materials must be burned to a negligible ash and the ash shall be removed from the site.

G. Earthwork.

(1) Earthwork including excavation, filling and backfilling, shall conform to the details provided herein and the approved plans.

(2) Selection and placement of fill and backfill materials shall be in accordance to FDOT Standard

Specifications Section 120. Satisfactory materials must be used within four feet (horizontally and vertically) of the proposed road surface. Fill and backfill shall be placed in lifts of 12 inches, or less, when located within four feet of roadways and stabilized access and within one foot of the outer pipe wall. Each layer shall be compacted and tested in accordance with the quality control provisions in the specifications. Flowable fill may be used in accordance with FDOT Standard Specifications.

(3) Unsatisfactory soils. For roadways, unsatisfactory soils are defined as Types P, H, or M in Section 505 of the FDOT Design Standards and shall be addressed accordingly. For DRAs and the drainage system the handling of subsurface soils are to be addressed in accordance with the approved plans. Other means of stabilization utilizing surcharge, chemical or synthetic fabrics may be proposed by the project engineer subject to approval of the Office of the County Engineer. For roadways, all rocks greater than six inches in diameter shall be removed to a depth of six inches below the bottom of the stabilized subgrade.

H. Roads.

(1) Material.

(a) Material of stabilizing subgrade or roadway shall be Type B, conforming to Sections 911, 912 (FDOT 2000 Standard Specifications), 913, 913A and/or 914 of the FDOT Standard Specifications, as applicable.

(b) Material for base course shall be as specified. Material shall conform to Sections 911 - 914 of the FDOT Standard Specifications.

(c) Bituminous materials shall conform to FDOT Standard Specifications.

(d) Sand for prime coat material shall conform to FDOT Standard Specifications and shall be clean dry sand, free of sticks, trash, roots, and other organic materials. Sand shall have a plastic index less than four and shall be free of silt and rock particles or clay balls larger than one fourth inch in size.

(e) Asphaltic concrete material for surface course shall conform to applicable sections of the FDOT Standard Specifications.

(2) Construction.

(a) Subgrade construction shall be compacted to a thickness of not less than 12 inches.

(b) Limerock base course shall conform to the FDOT Standard Specifications and shall be a thickness of not less than eight inches.

(c) Prime and tack coats shall conform to the FDOT Standard Specifications. All finished limerock base courses shall be primed and sanded in conformance to FDOT Standard Specifications immediately following the application of prime materials.

(d) Asphaltic concrete surface course shall conform to provisions of the FDOT Standard Specifications which apply to asphaltic concrete. Compacted thickness of surface course shall not be less than one and one-quarter inches for residential roads and one and one-half inches for collector and arterial roads. Greater thickness may be required if high traffic volume is anticipated.

I. Road shoulders.

(1) Stabilized shoulder construction is required adjacent to all paved and stabilized roadways.

(2) Materials for stabilizing shoulder shall be Type B conforming to the FDOT Standard Specifications.

(3) Where stabilized shoulders are to be constructed the surface shall be brought to the required grade as depicted in the plan, profile and cross sections. Stabilizing shall be Type B stabilization conforming to the FDOT Standard Specifications. Stabilizing material shall be placed and mixed in

one layer and compacted to a thickness of not less than six inches.

J. Drainage facilities.

(1) Pipe size and materials.

(a) Drainage pipes shall be a minimum of 15 inches for residential and commercial driveways and 18 inches in diameter for all other stormwater systems within a right-of-way or easement associated with the right-of-way.

(b) The use of reinforced concrete pipe shall conform to FDOT Standard Specifications. Other pipe material may be allowed if on the FDOT Qualified Products List (QPL), and with the approval of the County Engineer. For projects that are to be maintained by the County, justification for use of material other than reinforced concrete pipe shall include, but not be limited to data and values of water levels, soil conditions, resistivity, pH, chlorides and sulfates. For County projects, a value engineering proposal shall be provided with the justifications for the use of other than reinforced concrete pipe.

(c) Headwalls and tailwalls for culverts and storm drain shall be manufactured steel end sections or rip rap or concrete structures in accordance with index numbers 250 through 268 of the FDOT Road Design Standards Manual. Culverts with mitered or flared end sections may be used if designed in accordance with Index numbers 270 through 273 of the FDOT Road Design Standards Manual. Concrete mitered end sections are required for culverts, cross drains and side drains when within a County right-of-way with posted speeds of 40 mph or greater. Construction shall conform to FDOT Standard Specifications.

(d) Manholes, inlets and junction boxes shall be of pre-cast reinforced concrete, cast-in-place reinforced concrete or of brick masonry conforming to FDOT Standard Specifications as applicable.

1. Manholes shall be located at the end of each run; at all changes in grade, size or direction; and at distances no greater than that indicated in the FDOT Drainage Manual.
2. Brick for masonry construction shall be concrete brick or masonry units conforming to ASTM Specification C55 Grade S-II or Sections 425 and 949 of FDOT Standard Specifications.
3. Mortar for masonry construction shall conform to Section 425 of FDOT Standard Specifications.
4. Concrete for cast-in-place and pre-cast structures shall conform to the requirements of Section 425 of the FDOT Standard Specifications.
5. Reinforcing the cast-in-place or pre-cast concrete structures shall be grade 40 conforming to Section 415 of the FDOT Standard Specifications.
6. Pre-cast structures shall be subject to approval of design materials and fabrication details submitted prior to installation.
7. Frames, grates and covers shall be of cast iron for installation where flush with the adjacent grade and subject to vehicular loads. Cast iron covers for manholes shall be designed for traffic bearing and shall weigh not less than 130 pounds. Covers shall have raised integral cast letters indicating "Sanitary", "Storm", "Electric", "Telephone", or similar lettering explaining the use and purpose of structure. Cast iron grates for inlets shall be designed for traffic bearing and shall have sufficient open area to pass the calculated maximum stormwater surface flow. No opening shall be greater than one inch in least dimension with lesser openings used where pedestrian safety is a consideration. Steel grates for inlets may be used in certain cases where approved by the Office of the County Engineer.
8. Copies of the shop drawings, approved by the Engineer of Record, shall be submitted to

the Office of the County Engineer for all County projects and publicly dedicated improvements. Any changes from the approved design shall be clearly indicated on the shop drawings and shown within a 'cloud'.

(2) Construction shall conform to Section 430 of the FDOT Standard Specifications. Pipe shall be laid to invert elevation indicated on the approved plans. Joints shall be made according to the manufacturer's printed instructions. Damage to protective bituminous coatings shall be repaired. Minimum burial depth of all utilities shall comply with the details provided herein. All drainage pipes shall have no less than one foot of cover with the exception of when a saddle is used per the detail provided herein.

(3) Retention/detention areas. The in situ material below and within retention/detention areas shall not be excavated beyond the limits of the grades and elevations as indicated on the plans without the approval of the Office of the County Engineer.

K. Grading.

(1) Grading for construction of roads, utilities and drainage facilities shall conform to the requirements herein, as well as Section 120 of the FDOT Standard Specifications.

(2) Rough grading prior to construction shall bring the entire project area to the approximate finish grade or interim grade as specified on the approved plan. The subgrade shall be properly drained to insure stability prior to proceeding with construction.

(3) Finish grading. Earth surfaces for the project area, including but not limited to road rights-of-way, drainage swales and retention areas, shall be brought to the elevations shown on the approved plans with a smooth surface ready for grassing or other designated vegetative cover. Areas around culverts, headwalls and tailwalls shall be graded to a neat and finished appearance. After completion of the installation of underground facilities, the surface shall be brought to the elevations shown on the approved plans. When utilities are installed in areas where no surface construction is proposed, the surface shall be restored to its original or better condition.

L. Fencing.

(1) Fencing shall conform to the requirements herein and shall be Type B fencing per Section 550 of the FDOT Standard Specifications. The use of other fencing type must be approved by the County Engineer.

(2) Fences shall be constructed six inches inside the property line of drainage retention areas and other dedicated public areas, unless otherwise specified on the approved plans.

(3) Fence posts shall be set in concrete to the dimensions shown in the details provided herein. Each post shall be capped.

(4) Gates shall be constructed where shown on the plan, shall be double hung, and shall produce a clear 20 foot wide opening.

M. Traffic signs.

(1) This section includes street name signs, traffic regulatory signs, directional signs, warning signs, delineators, temporary signs, barricades and warning devices.

(2) Traffic regulatory and warning signs shall conform to the requirements for conventional roads in the MUTCD.

(3) Temporary signs, barricades, and warning devices advising the public of hazardous conditions or construction in progress shall conform to the requirement of the MUTCD. Appropriate signs, barricades and/or warning devices are required for all hazardous construction including all utility installations, and must be on site before commencement of construction.

(4) Materials.

(a) Street name signs shall be produced from blanks of aluminum alloy 6061-T6 conforming to ASTM Specifications B209 treated with Alodine 1200, Iridite 14.2, or Bonderite 721 prior to application of sheeting. Blanks shall be 0.080 inches thick and nine inches high by either 24, 30, or 36 inches in width as required to accommodate the sign message. Corners shall be rounded. For public or county maintained roads, letters or legend shall be six inches high, white high intensity reflective sheeting, on a green transparent film background with white 1/2 inch thick high intensity reflective border. For private or non-county maintained roads, letters or legend shall be six inch high, green high intensity reflective sheeting, on a white transparent film background with green 1/2 inch thick high intensity reflective border.

(b) Posts for traffic signs shall be 2 inch square posts weighing not less than four pounds per lineal foot. Post shall be perforated on the mounting flange with 5/16 inch holes spaced at one inch centers beginning at one end of the post and providing no less than 60 holes. Mounting height shall not be less than seven feet to bottom of the sign face, or in accordance with the details herein.

(c) Delineators are required on each end of cross drain culverts (except those with flush inlets). They shall be Type 2, four inches x eight inches, amber reflectors mounted on both sides of the post and conform to the FDOT Standard Specifications. Posts shall be a minimum of six feet long galvanized "U" channel weighing not less than two pounds per lineal foot. Post shall be perforated on the mounting flange with 5/16 inch holes spaced at one inch centers beginning at one end of the post and providing no less than 48 holes. Reflective faces shall face traffic and top of delineator shall be no less than four feet, and not more than five feet above finished grade. Post shall be buried to a depth no less than 18 inches below grade.

(d) Fasteners. Bolts and nuts for securing sign faces to posts shall be Class "A" conforming to ASTM Specification A307. Bolts, nuts and flat washers shall be galvanized conforming to ASTM Specification A123 or cadmium.

(5) Installation.

(a) Sign posts shall be set to the minimum depth indicated and checked for vertical alignment. Post shall be plumb and not be off vertical by more than five degrees.

(b) Fasteners shall be securely installed using specified hardware. Galvanized or cadmium plated flat washers shall be used behind each nut and bolt head.

(c) Speed limit signs shall not be erected until the Board has established the legal speed limit, based on the project engineer's speed study and recommendation as required in Article 6.

(d) Temporary signs, barricades and warning devices shall be installed and used in accordance with the requirements of the MUTCD and FDOT Design Standards.

(6) Private road subdivisions may substitute more aesthetically pleasing sign materials upon approval of the County Engineer.

N. Pavement markings.

(1) This section includes reflective paint and thermoplastic pavement markings for traffic control.

(2) Materials.

(a) Traffic paint for pavement markings shall conform to subsections 971-12.2 and 971.12.3 of the FDOT Standard Specifications.

(b) Glass spheres for reflective traffic paint shall be a Type I and Type 4 double drop application and conform to subsections 971-13.1 and 971-13.2 and 971-13.8 of the FDOT Standard Specifications. Six pounds per gallon of Type 1 glass spheres and eight pounds per gallon of Type 4 glass spheres shall be applied during the paint applications.

(c) Thermoplastic striping conforming to Section 711 of FDOT Standard Specifications is required within the County right-of-way, unless otherwise excepted.

(3) Installation.

(a) The work shall conform to Sections 710-3.1 through 710-6.5 inclusive and Section 710-6.8 through 710-6.10 inclusive of the FDOT Standard Specifications. The rate of application shall be 40 gallons per mile for six inch wide painted stripes and three linear feet per pound for thermoplastic applications. Six inch wide stripes shall be used in all instances except for stop bars which shall be 24 inches wide.

(b) Surface Condition. The pavement surface shall be sufficiently cured prior to the installation of the permanent pavement markings, and these markings shall only be applied after 30 calendar days following the final pavement rolling.

(c) Markings to be removed from final pavement surface shall be removed by an acceptable method as approved by the Office of the County Engineer. Over-painting on final pavement surfaces shall not be permitted to obliterate existing markings.

O. Grassing.

(1) This section includes sodding and seeding with associated work such as mulching, fertilizing and watering and shall conform to the requirements herein, as well as Sections 570 and 575 of FDOT Standard Specifications, 2007 version unless modified hereafter in this section.

(2) Materials.

(a) Sod shall be established, well-rooted common Bermuda grass, St. Augustine grass, Centipede grass, Pensacola Bahia grass or Argentine Bahia grass except that where sod replaces or is adjacent to established private lawns, similar grass material to that existing shall be used. Sod shall be alive, fresh and uninjured at the time of planting.

(b) Mulch material shall be dry straw of hay or oats, rye, Bermuda or Bahia grass free of weeds and undesirable grasses.

(c) Seed shall consist of the following mixture per acre: 80 pounds of Argentine Bahia grass, 20 pounds of Roadside Bermuda and 30 pounds of Rye grass or Brown Top Millet (depending on season). Seed shall be verified for a minimum germination rate of 85 percent.

(d) Fertilizer shall conform to Article 6.

(e) Hydro-seeding may be substituted for other methods of grassing except where sodding is specifically required in these specifications. Hydro-seeding shall comply with Section 570 of the FDOT Standard Specifications.

(3) Workmanship.

(a) Either seeding and mulching or sodding may be used except where sodding is specifically required. Work shall not begin until grading is approved. Lack of rain after planting shall not excuse the results of seeding or sodding as required in other sections. Sodding is required one course deep along the edge of pavement (minimum 16 inches as measured from the edge of pavement toward the ditch swale) and also at the ends of all cross drains and any other area where erosion is anticipated to be a problem. All grassing shall be well established, with minimum coverage of 70 percent by the end of the developer's maintenance period or final acceptance, as applicable, and any required grassing areas which are not well established or showing erosion shall be sodded by the developer or contractor prior to acceptance by the County.

(b) Sodding shall be solid with edges staggered where possible. Each section shall be placed in firm contact with the soil.

(c) Seed and fertilizer may be spread by mechanical spreaders which are independently operated as a part of the cultipacker or grain drill. Mulch is required and shall be applied at the rate of four tons per acre and shall be cut into the soil with a rotovator or other approved device. A cultipacker or a traffic roller shall be used for rolling the seeded and

mulched areas. No less than 80 pounds of Bahia grass seed and no less than 20 pounds of Bermuda grass seed per acre shall be scattered uniformly over the grassing area. During the months of March through July, an additional 30 pounds per acre of millet grass seed shall be applied in addition to the Bahia grass and Bermuda grass seed. During the months of October through February an additional 30 pounds of rye grass seed shall be applied in addition to the Bahia grass and Bermuda grass seed. Fertilizer application shall be in conformance with Article 6.

P. Concrete.

(1) This section includes requirements for cast-in-place and pre-cast concrete construction.

(2) For testing purposes concrete shall be designed by the working stress method. The ultimate design strength method may also be employed when consistent with industry standard.

(a) Proportioning of ingredients shall be in accordance with accepted mix design.

(b) Reinforcing steel conforming to ASTM A615 with a yield strength no less than grade 40 shall be used unless otherwise specified in the plans.

(c) Welded wire fabric shall conform to ASTM A185.

(d) Premolded expansion joint filler shall conform to ASTM D1751 or D1752.

(e) Joint sealer shall conform to ASTM Specification D1190.

(f) Liquid curing compound shall conform to AASHTO Specification M148-60 Type 2.

(g) Curing paper shall conform to AASHTO Specification M139.

(3) Construction.

(a) Concrete sidewalk shall conform to the requirements herein as well as the FDOT Standard Specification Section 522. Concrete shall be cured using any method contained in 520-8 of the FDOT Standard Specifications.

(b) Concrete curb and gutter, curb elements, and traffic separators shall conform the details herein and the provisions of Section 520 of the FDOT Standard Specifications.

(c) Concrete driveway aprons constructed in public rights-of-way shall conform to the requirements herein as well as the provisions of Section 350 of the FDOT Standard Specifications. Concrete driveways shall be constructed using 3,000 psi concrete and shall be at least six inches thick, and shall have six inch x six inch ten gauge welded wire fabric reinforcement. Fiber concrete may also be used but it also must be reinforced with welded wire fabric. Commercial driveways shall include a minimum of 12 inches stabilized subgrade.

Q. Quality control.

(1) This section includes requirements for testing and inspection. Testing Services shall be performed by an acceptable independent laboratory. Inspection services shall be performed and/or overseen by a professional engineer licensed by the State of Florida. Copies of all tests shall be submitted by the testing laboratory to the Office of the County Engineer and the Engineer of Record within three working days after tests are performed. All reports submitted shall be typed and legible.

(2) Testing services.

(a) Testing shall include workmanship, in-situ materials and material mixtures for compliance with the specified requirements. The Office of the County Engineer shall be notified a minimum of 48 hours prior to density tests and other specified tests.

(b) Laboratory maximum density of soils or soil mixtures at optimum moisture shall be determined by FM 1 T-180 for road subgrade, base course, pipe trenches and other applications except embankment fill materials for which maximum density shall be determined by FM 1 T-99.

(c) Field density of limerock base course, stabilized subgrade, stabilized roadway, and soils or soil mixtures in fill or backfill shall be determined by Nuclear Method in accordance with ASTM D2922-81 or D3017-78.

(d) Bearing value for soils and soil mixture shall be determined by the methods required for determining Limerock Bearing Ratio (LBR) according to FDOT Bulletin 22.

(e) Concrete shall be sampled and tested in accordance with ASTM C172, C31 and C39.

(f) Stability of asphaltic concrete shall be in accordance with FDOT Standard Specification 330.

(g) Other tests may be required as indicated in the approved plans and associated documentation.

(3) Testing requirements.

(a) Stabilized subgrade shall be tested for LBR and field density. The minimum acceptable LBR shall be 40, and a minimum of one sample every 1,500 linear feet of roadway shall be tested. In no event, shall there be less than one LBR test per project. Additional tests for LBR shall be taken if, in the opinion of the County Engineer, a change in the soil mixture is evident. The density of stabilized subgrade shall not be less than 98 percent of the maximum density as determined by FM 1 T-180. Field density tests shall be at intervals not to exceed 500 feet, but no less than one test shall be taken for each section of road between intersections or between an intersection and the termination of a road. The completed stabilized subgrade shall be shaped to conform to the finished lines, grades and cross sections indicated on the approved plans. The subgrade shall be checked by use of elevation stakes. The stabilized subgrade shall conform to the depths and widths specified on the approved plans. However, in no case shall the variance be greater than 1/2 inch for depth and two inches for width as measured from the centerline. The stabilized subgrade shall be located within the right-of-way in accordance with the approved plans.

(b) Limerock base course shall be tested for LBR, carbonates of calcium and magnesium, liquid limit, plasticity, density and the width and depth specified. The minimum acceptable LBR shall be 100. A minimum of two samples per mile of roadway shall be tested. In no event shall there be less than one LBR test per project. Carbonates, liquid limits and plasticity shall conform to the requirements of Section 911 of the FDOT Standard Specifications. Density shall not be less than 98 percent of maximum density as determined by FM 1 T-180. Field density tests shall be at intervals not to exceed 500 feet, but no less than one test shall be taken for each section of road between intersections or between an intersection and the termination of a road. The finished surface of the base course shall be checked with a template cut to the required crown. All irregularities greater than 1/4 inch shall be corrected by scarifying and removing or adding rock as required, after which the entire area shall be re-compacted as specified. The base course shall conform to the depths and widths specified on the approved plans. However, in no case shall the variance be greater than 1/2 inch for depth and two inches for width as measured from the centerline.

(c) Asphaltic concrete surface course shall have extraction, gradation, and specific gravity tests taken on the material placed each day. Design mix must be submitted to and approved by the Office of the County Engineer prior to the manufacture of the asphaltic concrete. The finished surface shall conform to Section 330-12 of the FDOT Standard Specifications. The surface course shall conform to the depths and widths specified on the approved plans. Density of asphaltic concrete surface course shall be 92 percent of approved project mix laboratory density.

(d) Stabilized roadway shall be tested as required for stabilized subgrade.

(e) Stabilized shoulder shall be tested as required for stabilized subgrade. Field density shall be taken at intervals not to exceed one-quarter mile on each side of the road. Density of

stabilized shoulder shall not be less than 95 percent of maximum density as determined by FM 1 T-180.

(f) Pipe trenches within the limits of proposed pavement, stabilized roadway and stabilized shoulders, where such construction can be reasonably anticipated, shall be backfilled in accordance with Section 125-8, FDOT Standard Specifications and details herein. Tests on each layer of backfill shall be taken in intervals not to exceed 400 lineal feet of trench.

(4) Inspection services.

(a) Inspection services shall include field examination for compliance with all requirements of these specifications.

(b) Dimensional inspection. All construction shall be inspected before concealment to determine compliance with all depth, width, height, thickness and other dimensional provisions of these specifications.

(c) Materials inspection. All materials used in construction which are not controlled by the testing requirements of this section shall be inspected for compliance with the provisions of other sections of these specifications. Manufacturer's certificates of compliance with the requirements of these specifications shall be furnished when requested.

(d) Certification of Satisfactory Completion shall include certification as to both testing and inspection as to being in substantial compliance with the approved plans and associated documents. The project engineer is responsible for testing only to the extent of the receipt and review of all required satisfactory test results from the independent testing laboratory prior to the issuance of his certificate.

Division 2 Utility Construction Specifications

Sec. 7.2.1 Purpose and intent.

This division sets forth the specifications for the construction of pipes and appurtenances for the utility system.

Sec. 7.2.2 Minimum requirements.

A. Grades, survey lines and monuments:

(1) All work shall be constructed in accordance with the lines and grades shown on the plans. The full responsibility for keeping alignment and grade shall rest upon the contractor.

(2) The contractor shall, at his own expense, establish all working or construction lines and grades as required from the reference marks, and shall be solely responsible for the accuracy thereof.

(3) Property corners and survey monuments shall be preserved using care not to disturb or destroy them. If a property corner or survey monument is disturbed or destroyed during construction, whether by accident, careless work, or required to be disturbed or destroyed by the construction work, said property corner or survey monument shall be restored by a Florida licensed Surveyor. Contractor shall be responsible for all associated costs.

B. Utility coordination

(1) All information received by the engineer and contractor through the review of MCUD record drawings and project files shall not be relied upon by contractor without field verification. The contractor is responsible for subsurface verification of all existing utilities prior to construction.

(2) The contractor shall contact Sunshine State One Call of Florida, Inc., in accordance with required timeframes, prior to commencement of work, to locate existing underground utilities.

(3) The contractor shall utilize due care at all times when performing excavations.

(4) The contractor shall comply with all trench safety requirements as outlined in the FAC and OSHA standards.

(5) The contractor shall take all reasonable precautions against damage to existing utilities. However, in the event of damage to an existing utility, the contractor shall immediately notify the responsible official of the organization operating the interrupted utility. The contractor shall lend all possible assistance in restoring services and shall assume all cost, charges, and/or claims connected with the interruption and repair of such services, as determined by Florida Statutes.

(6) If the contractor damages existing facilities belonging to MCUD, MCUD may elect to expedite the repairs to its facilities with MCUD forces. The contractor shall reimburse MCUD for all repair costs should the contractor not act in a timely manner or is found to be negligible.

C. The contractor shall not operate MCUD valves without prior MCUD authorization.

D. Deviations occasioned by structures or utilities

(1) Wherever obstructions are encountered during the progress of the work and interfere to such an extent that an alteration in the plans is required, MCUD shall have the authority to order a deviation from the line and grade or arrange with the owners of the structures for the removal, relocation, or reconstruction of the obstructions.

(2) Where other existing utilities are an impediment to the vertical or horizontal alignment of a proposed main, MCUD shall have the authority to order a change in grade or alignment of the proposed main. MCUD shall have the authority to direct the contractor to coordinate with all utilities and other users of the right-of-way to facilitate appropriate conflict resolutions.

E. Subsurface exploration and test pits

(1) The contractor shall examine the site and undertake subsurface investigations including soil borings before commencing the work. MCUD will not be responsible for presumed or existing soil conditions in the work area.

(2) Test pits:

(a) Test pits for the purpose of locating underground pipeline, utilities, or structures in advance of the construction shall be excavated and backfilled by the contractor

(b) Test pits shall be backfilled immediately after their purpose has been satisfied and maintained in a manner satisfactory to MCUD.

(c) The costs for such test pits shall be borne by the contractor.

(d) Test pit locations are to be included in construction contracts and the location shall be determined by MCUD at the pre-design meeting. Test pits shall be included in the bid form.

F. Maintenance of traffic and closing of streets. Refer to Section 7.1.1.C.

G. Protection of public and property. Refer to Section 7.1.3.M.(3).

H. Protection of utility structures

(1) Temporary support, adequate protection and maintenance of all underground and surface utility structures including drains, sewers, manholes, hydrants, valves, valve covers, power poles and miscellaneous other utility structures encountered in the progress of the work shall be furnished by the contractor at his expense.

(2) Any such structures that may have been disturbed shall be restored upon completion of the work.

(3) MCUD's valves, hydrants, manholes, and other appurtenances shall be made accessible to MCUD's personnel during all phases of construction.

I. Open excavation. Refer to Section 7.1.3.G.

J. Protection of trees. Refer to Section 6.8.

K. Restoration of fences.

(1) Any fence, or part thereof, that is damaged or removed during the course of the work shall be repaired or replaced by the contractor and shall be left in as good a condition as before the

starting of the work. Areas affected by fence removal shall be secured daily.

(2) The manner in which the fence is repaired or replaced and the materials used shall be subject to the approval of MCUD.

L. Construction in easements and rights-of-way: Refer to Section 7.1.1.

M. Miscellaneous requirements.

(1) All work which might be damaged or rendered inferior by inclement weather shall be suspended during such weather. The work shall be covered and protected so that it is not damaged by the weather.

(2) All chemicals used for construction or furnished for operation, must show approval from the EPA. Use of such chemicals and disposal of residues shall be in strict conformance with label instructions and materials safety data sheets supplied by the manufacturer.

(3) The contractor shall not impede or interfere with the work of other contractors on the project and shall cooperate with the other contractors to ensure project progress.

(4) Any existing MCUD owned equipment or material which is removed or replaced as a result of construction that is determined by MCUD as salvage in the construction documents shall be delivered to an MCUD approved location.

Sec. 7.2.3 Confined spaces. All confined space entries shall comply with all applicable FAC and OSHA requirements.

Sec. 7.2.4 Site work.

A. General. All site work shall conform to the approved plan for which a permit is issued.

B. Excavation.

(1) General

(a) All excavation, backfill, fill, and grading associated with utility trench and structural construction shall be performed by the contractor concurrently with the work specified in the project specifications.

(b) The contractor shall furnish all labor, materials, equipment, and incidentals necessary to perform all excavation, backfill, compaction, grading, shoring, and slope protection required to complete the work shown on the drawings and specified herein.

(c) The work shall include, but not necessarily be limited to: lift stations, manholes, vaults, conduit, pipe, roadways and paving; all backfilling, fill, and required borrow; grading; disposal of surplus and unsuitable materials; and all related work such as sheeting, bracing, and water handling.

(d) Unauthorized excavation, as well as remedial work directed by MCUD, shall be at the contractor's expense.

(e) When excavation has reached required sub grade elevations, a professional engineer licensed by the State of Florida shall make an inspection of conditions, if requested by MCUD. If the sub grade is unsuitable, contractor shall carry excavation deeper and replace excavated material with fill or bedding rock, as directed by MCUD.

(f) If the contractor excavates below grade through error, for his own convenience, or through failure to properly dewater the excavation or disturbs the sub grade before dewatering is sufficiently complete, the contractor may be directed by MCUD to excavate below grade and refill the excavation using fill or bedding rock.

(g) Slope sides of excavations shall comply with local codes, ordinances, and OSHA requirements. Contractor shall shore and brace where sloping is not possible due to space restrictions or stability of the material excavated in accordance with 29 CFR 1926.650. Sides and slopes shall

be maintained in a safe condition until completion of backfilling.

(h) Contractor shall stockpile satisfactory excavated materials at a location approved by MCUD until required for backfill or fill. When needed in the work, material shall be located and graded at the direction of a geotechnical/soils engineer.

(i) Stockpiles shall be placed and graded for proper drainage. All soil materials shall be located away from the edge of excavations. All surplus and/or unsuitable excavated material shall be legally disposed of by the contractor daily. Any permits required for the hauling and disposing of this material shall be obtained by the contractor prior to commencing hauling operations.

(2) Excavation for structures.

(a) All such excavations shall conform to the elevations and dimensions shown on drawing within a tolerance of plus or minus 0.10 foot and extending a sufficient distance, as shown on the drawings, from footings and foundations to permit placing and removing form work, installation of services, and other construction or inspection.

(b) In excavating for footings and foundations, care shall be exercised not to disturb the bottom of the excavation. Bottoms shall be trimmed to required lines and grades to leave a solid base to receive concrete.

(3) Trench excavation.

(a) Excavation for all trenches required for the installation of utility pipes shall be made to the depths or elevations indicated on the drawings and in such manner and to such widths as will give suitable room for laying the pipe within the trenches, for bracing and supporting, and for pumping and drainage facilities.

(b) The bottom of the excavations shall be firm and dry and in all respects acceptable to MCUD.

(c) Excavation shall not exceed normal trench width as specified in the standard drawings and as per FDOT Standard Specifications for Road and Bridge Construction.

(d) Where pipes are to be laid in bedding rock, fill or encased in concrete, the trench may be excavated by machinery to or just below the designated subgrade provided that the material remaining in the bottom of the trench is no more than slightly disturbed.

(e) Where the pipes are to be laid directly on the trench bottom, the lower part of the trenches shall not be excavated to grade by machinery. The last of the material being excavated shall be done manually in such a manner that will give a shaped bottom, true to grade, so that pipe can be evenly supported on undisturbed material, as specified in the Standard Details. Bell holes shall be made as required.

C. Sheeting and bracing in excavations.

All sheeting and bracing shall comply with OSHA regulations in accordance with 29 CFR 1926.650.

D. Dewatering, drainage, and flotation.

(1) The dewatering operation shall comply with the requirements of the permitting regulatory agencies.

(2) The contractor shall excavate, construct, and place all pipelines, concrete work, fill, and bedding rock in-the-dry. The contractor shall not make the final 24 inches of excavation until the water level is a minimum of one foot below proposed bottom of excavation.

(3) Discharge water shall be clear, with no visible soil particles.

(4) Discharge from dewatering shall be disposed of in such a manner that it will not interfere with the normal drainage of the area in which the work is being performed, create a public nuisance, or form ponding.

(5) The operations shall not cause injury to any portion of the work completed, or in progress, or to the surface of streets, or to private property.

(6) If private property is involved, advance written permission shall be obtained by the contractor from the property owner.

(7) The contractor shall provide and maintain proper equipment and facilities to remove and properly dispose of all water entering excavations. Such excavations shall be kept dry to obtain a satisfactory undisturbed subgrade foundation condition until completion and acceptance of construction.

(8) Dewatering shall be conducted in such a manner as to preserve the natural undisturbed bearing capacity of the subgrade soils at proposed bottom of excavation.

(9) Wellpoints shall be surrounded by suitable filter sand and negligible fines shall be removed by pumping.

(10) The contractor shall furnish all materials and equipment and perform all work required to install and maintain the drainage systems for handling groundwater and surface water encountered during construction of structures, pipelines and compacted fills.

(11) Water levels shall be measured in observation wells located as directed by MCUD during backfilling and construction. Continuous pumping will be required as long as water levels are required to be below natural levels.

E. Bedding and fill.

(1) General.

(a) Material placed in fill areas under and around structures and pipelines shall be deposited within the lines and to the grades shown on the drawings or as directed by MCUD, making due allowance for settlement of the material.

(b) Fill shall be placed only on properly prepared surfaces which have been inspected and approved by MCUD. If sufficient fill material is not available from excavation on site, the contractor shall provide fill as may be required.

(c) Fill shall be brought up in substantially level layers or lifts starting in the deepest portion of the fill. All lifts shall be a maximum of 12 inches in depth.

(d) The entire surface of the work shall be maintained free from ruts and in such condition that construction equipment can readily travel over any section.

(e) Prior to filling, the ground surface shall be prepared by removing vegetation, debris, unsatisfactory soil materials, obstructions and deleterious materials. Contractor shall plow strip or break up sloped surfaces steeper than one vertical to four horizontal so that fill material will bond with the existing surface.

(f) Fill material shall not be placed on surfaces that are wet, muddy, frozen, or contain frost or ice.

(2) Materials.

(a) Materials for backfilling shall be as specified in FDOT Utility Accommodation Manual (UAM).

(b) Samples of the materials used as bedding and fill, whether excavated or borrow material, shall be made available for testing by MCUD upon request.

(c) Fill that is unsuitable by FDOT UAM standards shall be removed and replaced with suitable material at the direction of MCUD at no additional cost beyond that contained in the construction contract.

(3) Bedding and fill for structures.

(a) Bedding rock shall be used for bedding under all structures as indicated on the standard details. The contractor shall take all precautions necessary to maintain the bedding in a compacted state and to prevent washing, erosion or loosening of this bed.

(b) Fill shall be used as backfill against the exterior walls of the structures.

(c) Fill shall be compacted sufficiently in accordance with Section 7.2.4.F of these specifications. If compaction is by rolling, tamping, vibratory, or ramming, material shall be wet down as required.

(d) Backfilling shall be carried up evenly on all walls of an individual structure. No fill shall be allowed against walls until the walls and their supporting slabs, if applicable, have attained sufficient strength.

(e) Where pipes pass through building walls, the contractor shall take precautions to consolidate the fill up to an elevation of at least one foot above the bottom of the pipes. Fill in such areas shall be placed for a distance of not less than 3 feet either side of the edge of the pipe in level layers not exceeding 8 inches in depth.

(f) The surface of filled areas shall be graded to smooth true lines, strictly conforming to grades indicated on the drawings. No soft spots or uncompacted areas will be allowed in the work.

(g) Temporary bracing shall be provided as required during construction of all structures to protect partially completed structures against all construction loads, hydraulic pressure and earth pressure. The bracing shall be capable of resisting all loads applied to the walls as a result of backfilling.

(4) Bedding and fill for pipes.

(a) Bedding for pipe shall be as shown on the plans and comply with the standard details. The contractor shall take all precautions necessary to maintain the bedding in a compacted state and to prevent washing, erosion or loosening of this bed.

(b) Backfilling over and around pipes shall begin as soon as practicable after the pipe has been laid, jointed, and inspected. All backfilling shall be promptly completed and as shown on the standard detail.

(c) Any space remaining between the pipe and sides of the trench shall be carefully backfilled and spread by hand or approved mechanical device and thoroughly compacted with a tamper as fast as placed, up to a level of one foot above the top of the pipe. The backfilling shall be carried up evenly on both sides. Compaction shall be in accordance with the standard details and Section 7.2.4.F.

(5) The remainder of the trench above the compacted fill, as described above, shall be backfilled and thoroughly compacted in uniform layers. Compaction shall be in accordance with the standard details and Section 7.2.4.F.

F. Compaction.

(1) General.

(a) The contractor shall control soil compaction during construction on each one foot lift to provide a minimum density of 95 percent of the maximum dry compacted density as determined by FM 1 T-180.

(b) When within the limits of the roadbed, driveways and all travelways, the contractor shall control soil compaction during construction on each one foot lift to provide a minimum density of 98 percent of the maximum dry compacted density as determined by FM 1 T-180.

(c) The contractor shall provide MCUD copies of all soils testing reports, prepared by an acceptable independent testing laboratory, demonstrating compliance with these specifications.

(d) If the compacted surface of any layer of material is determined to be too smooth to bond properly with the succeeding layer, it shall be loosened by harrowing or by another approved method before the succeeding layer is placed.

(e) All fill materials shall be compacted in a dry condition. The contractor shall dewater excavated areas as required to perform the work and in such manner as to preserve the undisturbed state of the natural inorganic soils. Contractor shall break up the ground surface, pulverize, moisture-condition to the optimum moisture content, and compact to required depth and percentage of maximum density.

(f) Material shall be moistened or aerated as necessary to provide the optimum moisture content before compaction.

(g) Material which is too wet shall be spread on the fill area and permitted to dry, assisted by harrowing if necessary, until the moisture content is reduced to allowable limits.

(h) The contractor shall supply all hose, piping, valves, sprinklers, pumps, sprinkler tanks, hauling equipment and all other materials and equipment necessary to place water in the fill in the manner specified.

(2) Compaction tests.

(a) One compaction test location shall be required for each 400 feet of pipe and for every 100 square feet of backfill around structures as a minimum. MCUD may determine that more compaction tests are required to certify the installation depending on field conditions. The locations of compaction tests within the trench shall be in conformance with the following schedule:

1. One test at the spring line of the pipe.
2. At least one test for each 12 inches layer of backfill within the pipe bedding zone for pipes 24 inches and larger.
3. One test at an elevation of one foot above the top of the pipe.
4. One test for each two feet of backfill placed from one foot above the top of the pipe to finished grade elevation.

(b) If testing indicates fill which has been placed is below specified density, contractor shall provide additional compaction and testing prior to commencing further construction.

G. Grading. Refer to Sec 7.1.3.K.

Sec. 7.2.5 Trenchless pipe installation.

Directional drilling shall meet the requirements of Section 555 of the FDOT Standard Specifications. Jacking and boring shall meet the requirements of Section 556 of the FDOT Standard Specifications

Sec. 7.2.6 General Construction Requirements.

A. Pipe handling.

(1) The contractor shall be responsible for all materials furnished and storage of same, until the date of substantial completion. All PVC pipe materials shall be stored so as not exposed to direct sunlight prior to installation.

(2) The contractor shall replace at his own expense all materials found to be defective or damaged in handling or storage. The contractor shall, if requested by MCUD, furnish certificates, affidavits of compliance, test reports, or samples for check analysis for any of the materials specified herein.

(3) All pipe delivered to project site for installation is subject to random testing for compliance with the designated specifications.

(4) Pipe shall be handled in such a manner as will prevent damage to the pipe or coating.

(5) Accidental damage to pipe or coating shall be repaired or replaced to the satisfaction of MCUD or replaced.

(6) The pipe shall be supported on timber cradles or on properly prepared ground, graded to

eliminate all rock points and to provide uniform support along the full length, when not being handled.

(7) The pipe shall be supported at all times in a manner which will not permit distortion or damage to the lining or coating when being transported.

(8) Joint gaskets shall be stored in a clean, dark, and dry location until immediately before use.

(9) All pipe and fittings shall be inspected prior to lowering into trench to insure no cracked, broken, or otherwise defective materials are being used.

(10) The contractor shall clean ends of pipe thoroughly and remove foreign matter and dirt from inside of pipe and keep clean during and after laying.

(11) Pipe shall not be dropped or dumped into trenches under any circumstances. Pipe shall be lowered into the trench in such a manner as to avoid any physical damage to the pipe.

B. Pipe installation.

(1) Dirt or other foreign material shall be prevented from entering the pipe or pipe joint during handling or laying operations and any pipe or fitting that has been installed with dirt or foreign material in it shall be removed, cleaned and relaid. When pipe laying is not in progress, the open ends of the pipe shall be closed by a water-tight plug or by other means approved by MCUD to ensure absolute cleanliness inside the pipe.

(2) If the pipe laying crew cannot put the pipe into the trench and in place without getting earth into the pipe, MCUD may require that snugly-fitted, tightly-woven canvas bags be placed over each end before lowering the pipe. The bags shall be left in place until the connection is to be made to the adjacent pipe.

(3) Contractor shall remove all foreign material from the pipe or joint ring before the next pipe is placed.

(4) Minimum pipe depth shall comply with FDEP design criteria.

(5) All PVC pipe shall be installed in accordance with AWWA C600.

(6) All ductile iron pipe shall be installed in accordance with AWWA C600 unless such standards conflict with this Code in which case this Code shall apply. Contractor shall cut pipe only as necessary to comply with alignment shown on the plans. Flame cutting of pipe shall not be allowed.

(7) Contractor shall provide special tools and devices, such as special jacks, chokers, and similar items required for proper installation. Lubricant for the pipe gaskets shall be furnished by the pipe manufacturer, and no substitutes shall be permitted under any circumstances.

(8) Long radius curves, either horizontal or vertical, shall be laid with standard pipe by deflections at the joints. Maximum deflections at pipe joints and laying radius for the various pipe lengths shall be as recommended by the pipe manufacturer. Laying of sewer pipe shall be accomplished to line and grade in the trench only after it has been dewatered and the trench has been prepared in accordance with specifications outlined herein.

(9) All pipe laid shall be retained in position so as to maintain alignment and joint closure until sufficient backfill has been completed to adequately hold the pipe in place. All pipe shall be laid to conform to the line and grade shown on the plans.

(10) Variance from established line and grade, at any point along the length of the pipe, shall not be greater than 1/32 inches per inch of pipe diameter and not to exceed 1/2 inches, provided that any such variation does not result in a level or reverse sloping invert.

(11) The sewer pipe shall be laid up grade from point of connection on the existing sewer or from a designated starting point.

(12) The sewer pipe shall be installed with the bell end forward or upgrade.

(13) All pipe shall be installed to the homing mark on the spigot. MCUD shall be given an opportunity to check all joints in this manner before backfilling.

(14) The markings on reinforced concrete pipe indicating the minor axis of the elliptical reinforcement shall be placed in a vertical plane (top or bottom) when the pipe is laid.

C. Coatings and linings.

(1) All ductile iron pipe and fittings shall have an interior and exterior protective coating approved by MCUD, and applied according to the manufacturer's specifications.

(2) Where ductile iron pipe and fittings are to be below ground or installed in a casing pipe the exterior coating shall be a minimum one mil thick in accordance with ANSI/AWWA A21.51/C151, or a MCUD approved alternative.

(3) Where ductile iron pipe and fittings are to be installed above ground, pipe, fittings, and valves shall be thoroughly cleaned and given one field coat (minimum 1 1/2 mils dry thickness) of rust inhibitor primer. Intermediate and finished field coats shall also be applied by the contractor (minimum 1 1/2 mils dry thickness each coat).

(4) Primer and field coats shall be compatible and shall be applied in accordance with the manufacturers' recommendations.

(5) Final field coat shall be blue for domestic water, green for sewer, and Pantone Purple 522-C for reclaimed.

(6) All domestic and reclaimed water ductile iron pipe and fittings shall have an interior protective cement-mortar lining and an exterior seal coat of asphaltic material in accordance with ANSI/AWWA A21.4/C104, or a MCUD approved alternative.

(7) All sewer ductile iron pipe and fittings shall have an interior protective lining of coal tar epoxy or polyethylene with a minimum dry thickness of 30 mils applied by the pipe manufacturer. Polyethylene lining material shall comply with ASTM D-1248 and shall be fused to the interior of the pipe by heat forming a tightly bonded lining.

(8) Ductile iron pipe shall be polyethylene encased (eight mil) where shown on the drawings and in accordance with ANSI/AWWA A21.51/C105.

D. Pipe markings, identification and location.

(1) On field cut pipe, contractor shall provide homing mark on the spigot in accordance with manufacturers' recommendations

(2) Reinforced concrete pipe shall have markings indicating the minor axis of the elliptical reinforcement.

(3) Each length of pipe shall bear the name or trademark of the manufacturer, the location of the manufacturing plant, and the class or strength classification of the pipe and be plainly visible on the pipe barrel.

(4) Pipe which is not marked clearly is subject to rejection. All rejected pipe shall be promptly removed from the project site by the contractor.

(5) All non-metallic water mains shall be installed with a continuous, insulated 14 gauge copper wire installed directly on top and affixed to the pipe for locating purposes.

(6) All PVC water mains shall be a solid blue color.

(7) All ductile iron force mains shall be marked with a continuous stripe located within the top 90° of the pipe. Said stripe shall be a minimum two inches in width and shall be green in color. Backfill shall not be placed for 30 minutes following paint application.

(8) Horizontal directional drilling shall use 2 locating wires with a tensile strength of 1800 psi.

(9) All PVC force mains shall be a solid green color.

(10) All lettering shall appear legibly on the pipe and shall run the entire length of the pipe. Lettering shall read as is acceptable for the intended use.

(11) Utility main markers shall be required when a main is more than 30 feet from the edge of pavement or in an easement not adjacent to the right-of-way.

E. Separation of Pipes.

Horizontal and vertical separation of pipes shall comply with this Code, unless otherwise approved by MCUD, and shall comply with FDEP. Refer to details (be consistent with this language).

F. Testing and inspection.

(1) Testing criteria.

(a) Hydrostatic tests shall consist of a pressure and leakage test.

(b) Hydrostatic tests shall be conducted on all newly laid pressure pipes, joints, and valves including all service lines to the curb stops.

(c) Air testing of pressure pipes will not be permitted under any circumstance.

(d) Tests may be made on sections not exceeding 2,000 feet, when this procedure is acceptable to MCUD.

(e) Contractor shall furnish all necessary equipment and material, make all taps, and furnish all closure pieces in the pipe as required.

(f) Equipment to be furnished by the contractor shall include graduated containers, pressure gauges, hydraulic force pumps, and suitable hoses and piping.

(g) MCUD will monitor and approve a satisfactory test.

(h) The contractor may conduct hydrostatic tests after the trench has been partially backfilled with the joints left exposed for inspection for his informational purposes only.

(i) The hydrostatic tests for acceptance shall only be conducted after the trenches have been completely backfilled and compacted as specified.

(j) Where any section of pipe is provided with concrete thrust blocking, pressure test will not be made until at least five days have elapsed after the thrust blocking is installed. If high-early cement is used for the concrete thrust blocking, the time may be reduced to 24 hours if MCUD concurs that the concrete has cured and reached adequate strength.

(k) All pipe sections to be pressure tested shall be subjected to a hydrostatic pressure of 150 psi. The duration of each pressure test shall be for a period of two hours. The basic provisions of AWWA C600 shall be applicable.

(l) Prior to testing, the contractor shall flush all sewers with water sufficient in volume to obtain free flow through each line. Flushing water and debris shall not enter any operating lift station wet well. Flushing water will be pumped from the sewer system during flushing to an acceptable discharge location. A visual inspection, via video logging, shall be made and all obstructions removed.

(2) Procedure for pressure test.

(a) Each section of pipe to be tested, as determined by MCUD, shall be slowly filled with water and the specified test pressure shall be applied by means of a pump connected to the pipe in a satisfactory manner.

(b) Before applying the specified test pressure, all air shall be expelled from the pipe. To accomplish this, taps shall be made, and appropriate valves installed to ensure bleeding of all air from the main.

(c) If defective pipes, fittings, valves, or hydrants are discovered in consequence of this pressure test, all such items shall be removed and replaced by the contractor with sound material and

the test shall be repeated until satisfactory results are obtained. Provisions of AWWA C600, where applicable, shall apply.

(3) Procedure for leakage test.

(a) After completion of the pressure test, a leakage test shall be conducted to determine the quantity of water lost by leakage under the specified test pressure. Provisions of AWWA C600, where applicable, shall apply.

(b) Allowable leakage in gallons per hour for pipeline shall not be greater than that determined by AWWA Manual 23 or the formula:

L=N*D*(P^(1/2)) / 7400

Note:

L = Maximum allowable leakage in gallons per hour.

N = Number of pipe joints.

D = Nominal diameter of the pipe in inches.

P = Average test pressure during leakage test in pounds per square inch gauge.

(c) Leakage is defined as the quantity of water to be supplied in the newly laid pipe or any valved section under test, which is necessary to maintain the specified leakage test pressure after the pipe has been filled with water and the air expelled.

(d) Should any test of pipe laid disclose leakage greater than that allowed, contractor shall locate and replace or repair the defective joints, pipe or valve until the leakage from subsequent testing is within the specified allowance. All pipe and accessories to be installed shall be inspected and tested at the place of manufacture by the manufacturer as required by the manufacturer’s specifications.

(e) Each length of pipe shall be subject to inspection and approval at the factory, point of delivery, and site of work. If requested by MCUD, a sample of pipe to be tested shall be selected at random by MCUD or the testing laboratory approved by MCUD.

(f) When the specimens tested conform to applicable standards, all pipe represented by such specimens shall be considered acceptable based on the test parameters measured. Copies of test reports shall be available before the pipe is installed in the project.

(g) In the event that any of the test specimens fail to meet the applicable standards, all pipe represented by such tests shall be subjected to rejection. The contractor may furnish two additional test specimens from the same shipment or delivery, for each specimen that failed and the pipe will be considered acceptable if all of these additional specimens meet the requirements of the applicable standards. All such retesting shall be at the Contractor's expense.

(4) Pipe which has been rejected by MCUD shall be removed from the site of the work by the contractor and replaced with pipe which meets these specifications. All gravity sewers shall be tested for alignment, deflection and integrity prior to acceptance. In addition, a leakage test may be required for gravity sewers, at the discretion of MCUD.

(5) The leakage testing shall be performed by the contractor who shall be responsible for furnishing all necessary labor and equipment to conduct such testing. Alignment, deflection and integrity testing shall be performed utilizing television inspection or other methods solely at the discretion of MCUD.

(6) Gravity sewers shall be required to pass a leakage test before acceptance.

(7) Leakage testing shall be conducted in accordance with the procedure for "Recommended Practice for Low Pressure Air Testing of Installed Sewer Pipe" as established by the Uni-Bell PVC Pipe Association and ASTM F1417. Passing this test shall be presumed to establish leakage test limits

of 50 gallons per day per inch diameter per mile of sewer.

(8) Each test section shall not exceed 400 feet in length and shall be tested between adjacent manholes.

(9) The contractor shall notify the Utilities inspector a minimum of 48 hours prior to performing any leakage testing.

(10) The results of all leakage tests shall be witnessed and approved by the MCUD inspector. These written results shall be formatted and adequately labeled so that they are easily understandable, and a copy provided to MCUD.

(11) Internal video inspection or other testing methods for the gravity sewer shall be performed to check for, cleanliness, infiltration, alignment and deflection. The video inspection may also be used to check for cracked, broken or otherwise defective pipe, and overall pipe integrity.

(a) If the video inspection reveals cracked, broken, or defective pipe, or pipe misalignment resulting in vertical sags in excess of one and one-half inch and in the case of PVC pipe a ring deflection in excess of five percent, the contractor shall be required to repair or replace the pipeline. MCUD reserves the right to pass a mandrel through the PVC pipe to confirm ring deflection.

(b) Successful passage of the leakage test, and video or visual inspection is required before acceptance by MCUD.

(c) Prior to repair or replacement of failed sewer pipe, the method of repair or replacement shall be submitted to MCUD for approval. Pressure grouting of pipe or manholes shall not be considered as an acceptable method of repair.

G. Miscellaneous requirements.

(1) During inclement weather, all work which might be damaged or rendered inferior by such weather conditions shall be suspended. During suspension of the work from any cause, the work shall be suitably covered and protected so as to preserve it from injury by the weather or other circumstances. This measure includes installing temporary plugs in pipe ends to prevent contamination, inflow of debris, or access for animals and insects.

(2) Any chemicals used during project construction or furnished for project operation, whether herbicide, pesticide, disinfectant, polymer, reactant, or of other classification, must show approval of either EPA or USDA. Use and storage of all such chemicals and disposal of residues shall be in strict conformance with label instructions and materials safety data sheets supplied by the manufacturer.

(3) During construction progress, it may be necessary for other contractors and persons employed by MCUD to work in or about the site. MCUD reserves the right to put such other contractors to work and to afford such access to the construction site and at such times as MCUD deems proper. The contractor shall not impede or interfere with the work of such other contractors and shall cooperate with the other contractors for proper execution of the work.

(4) Any existing MCUD owned equipment or material including but not limited to valves, pipes, fittings, couplings, etc., which is removed or replaced as a result of construction, may be designated as salvage by the MCUD, and if so, shall be carefully excavated if necessary and delivered to MCUD at a location within Marion County.

Sec. 7.2.7 Pressure pipe restraint.

A. Restrained joint construction.

(1) Sections of piping requiring restrained joints shall be constructed using pipe and fittings with restrained "locked-type" joints manufactured by the pipe and fitting manufacturer.

(2) The joints shall be capable of holding against withdrawal for line pressures 50 percent above the

normal working pressure.

(3) Restrained pipe joints that achieve restraint by incorporating cut out sections in the wall of the pipe shall have a minimum wall thickness at the point of cut out that corresponds with the minimum specified wall thickness for the rest of the pipe.

(4) The minimum number of restrained joints required for resisting forces at fittings and changes in direction of pipe shall be determined from the length of restrained pipe on each side of fittings and changes in direction necessary to develop adequate resisting friction with the soil.

(5) All pressure pipe fittings and other items requiring restraint shall use restraining assemblies as specified in the standard detail. In rare circumstances, thrust blocks may be used with approval of MCUD.

(6) The mechanical joint restraint device shall have a working pressure of at least 250 psi with a minimum safety factor of 2.

B. Mechanical restraining devices.

(1) Mechanical restraining devices as specified herein may be substituted for the restrained "locked-type" joints manufactured by the ductile iron pipe and fitting manufacturer.

(2) Joint restraint device.

(a) Mechanical joint restraint shall be incorporated in the design of the follower gland and shall include a restraining mechanism which, when actuated, imparts multiple wedging action against the pipe, increasing its resistance as the pressure increases.

(b) Flexibility of the joint shall be maintained after burial.

(c) Glands shall be manufactured of ductile iron conforming to ASTM 536.

(d) Restraining devices shall be of ductile iron heat treated to a minimum hardness of 370 BHN.

C. Thrust blocks.

(1) Additional concrete, harnesses, and/or ties shall be approved by MCUD.

(2) Fittings shall be protected by polyethylene film, minimum eight mil thick, prior to placing concrete thrust block.

(3) Concrete for thrust blocking shall have a minimum compressive strength of 2,500 psi.

(4) Concrete shall be placed against undisturbed material, and shall not cover joints, bolts, or nuts, or interfere with the removal of any joint.

(5) Wooden side forms shall be provided for thrust blocks where trench conditions require.

(6) Thrust blocks shall be properly set and adequately cured prior to pressurizing the system.

Sec. 7.2.8 Valves and valve boxes.

A. General.

(1) All valves and appurtenances shall be designed, constructed and installed in accordance with the best practices and methods and shall comply with these specifications as applicable.

(2) All valves shall be inspected upon delivery in the field to insure proper working order before installation.

(3) Valves shall be set and jointed to the pipe in the manner as set forth in the AWWA Standards for the type of connection ends furnished.

(4) All valves and appurtenances shall be installed true to alignment and rigidly supported.

(5) Any valve or valve box damage shall be repaired to the satisfaction of MCUD before they are installed.

(6) Valves shall be installed in a vertical position and be provided with a standard valve box so arranged that no shock will be transmitted to the valve. The box shall be vertically centered over

the operating nut, and the cast iron box cover shall be set flush with the road or finished surface.

(7) After installation, all valves shall be subjected to the field test for piping as outlined in Section 7.2.6.F. Should any defects in materials or workmanship appear during these tests, the contractor shall correct such defects to the satisfaction of MCUD.

(8) Flanged joints shall be made with hot dipped galvanized bolts, nuts and washers. Mechanical joints shall be made with mild corrosion resistant alloy steel bolts and nuts. All exposed bolts shall be painted the same color as the pipe. All buried bolts and nuts shall be heavily coated with two coats of bituminous paint.

(9) Valves shall be located in an enclosure consistent with the standard details.

B. Resilient seat gate valves.

(1) General.

(a) All gate valves 12 inches and smaller shall be resilient seat gate valves.

(b) Gate valves shall be resilient seated, manufactured to meet or exceed the requirements of AWWA C509, as amended.

(c) Valves shall have an unobstructed waterway equal to or greater than the full nominal diameter of the valve.

(2) Material.

(a) The valve body, bonnet, and bonnet cover shall be cast iron ASTM A126, Class B.

(b) All ferrous surface inside and outside shall have a fusion-bonded epoxy coating. A two inch nut shall be provided for operating the valve.

(c) All valves are to be tested in strict accordance with AWWA C509.

(3) Miscellaneous requirements.

(a) The valves shall be non-rising stem with the stem made of cast, forged, or rolled bronze as specified in AWWA C509.

(b) Two stem seals shall be provided and shall be of the O-ring type.

(c) The stem nut must be independent of the gate.

(4) The resilient sealing mechanism shall provide zero leakage at the water working pressure when installed with the line flow in either direction.

C. Butterfly valves.

(1) General.

(a) All shut-off valves 16 inches and larger shall be butterfly valves.

(b) Butterfly valves and operators shall conform to the AWWA Standard Specifications for Rubber Seated Butterfly Valves, Designation C504, and Class 150A or B.

(c) The face-to-face dimensions shall be in accordance with above mentioned AWWA Specification for short-body valve.

(d) The valve shaft shall be turned, ground, and polished, constructed of 18-8 stainless steel and designed for both torsional and shearing stresses when the valve is operated under its greatest dynamic or seating torque. Shaft shall be of either a one piece unit extending full size through the valve disc and valve bearing or it may be of a stub shaft design.

(2) Material.

(a) The valve body shall be constructed of close grain cast iron per ASTM A126, Class B or equivalent material.

(b) All retaining segments and adjusting devices shall be of corrosion resistant material.

(c) Valve seats shall be a natural rubber or synthetic rubber compound.

(d) Valve seats 30 inches and larger shall be field adjustable and replaceable without dismounting operator disc or shaft and without removing the valve from the line.

(e) All retaining segments and adjusting devices shall be of corrosion resistant material. Valves 24 inches and smaller shall have bonded or mechanically restrained seats as outlined in AWWA C504.

D. Water Air Release Valve.

(1) Valve body shall be cast iron or reinforced nylon cover and baffle.

(2) Floats and trim shall be of stainless steel Type 304 or 316.

(3) Resilient seat shall be of Buna N.

(4) Water diffuser shall be bronze.

(5) Valves shall have a vacuum check to prevent air from reentering the line.

(6) All fittings shall be threaded.

E. Wastewater air/vacuum valve.

(1) Wastewater force mains shall be equipped with either air or air/vacuum release valves located as shown on the drawings.

(2) The valve body shall be stainless steel or reinforced nylon; the floats, float guide and stem shall be of stainless steel Type 304 or 316.

(3) The resilient seat shall be of Buna N.

(4) The valve shall be suitable for 150 psi working pressure.

(5) Valve shall have standard two inch National Pipe Thread (NPT) inlets and outlet ports unless otherwise shown on the drawings.

(6) Provisions shall be made for back-flushing the valve with clean water.

F. Wastewater air release valve.

(1) The valve body and cover shall be cast stainless steel or reinforced nylon, and all internal working parts shall be of stainless steel Type 304 or 316.

(2) The venting orifice shall be 3/8 inch in diameter and the seating material shall be of Viton.

(3) The inlet opening shall be standard two inch NPT screwed connection, unless otherwise shown on the approved plans.

(4) The valve shall include a flushout feature for periodic cleaning of the internal mechanism.

(5) The overall height of the valve body shall not exceed 21 inches, unless otherwise shown on the Drawings. Air release valves shall be installed as shown on the standard details.

(6) The valves shall have a cast iron body, cover and baffle, stainless steel float, bronze water diffuser, Buna-N or Viton seat and stainless steel trim.

(7) Valves shall be provided with a vacuum check to prevent air from reentering the line.

G. Plug valves.

(1) All plug valves shall be installed so that the direction of flow through the valve is in accordance with the manufacturer's recommendations.

(2) Valves shall be of the non-lubricated eccentric type with resilient faced plugs and shall be furnished with end connections as shown on the plans.

(3) Flanged valves shall be faced and drilled to the ANSI 125/150 lb. standard. Mechanical joint ends shall meet AWWA C111, Class B.

(4) Valve bodies shall be of ASTM A126, Class B Semi-steel, 31,000 psi tensile strength minimum in compliance with AWWA C507 and C504. All exposed nuts, bolts, springs, washers, etc. shall be zinc or cadmium plated. Resilient plug facings shall be of Hycar or Neoprene.

(5) Port areas for valves four inches through 20 inches shall be 100 percent nominal pipe diameter. Valves 24 inches and larger shall have a minimum port area of 100 percent of nominal pipe diameter. All exposed nuts, bolts, springs, washers, etc., shall be zinc or cadmium plated. Resilient plug facings shall be of Hycar or Neoprene.

(6) Valves shall be furnished with permanently lubricated stainless steel or oil-impregnated bronze upper and lower plug stem bushings. These bearings shall comply with AWWA C507 and C504.

(7) Seats in four inch and larger valves shall have a welded-in overlay of a high nickel content on all surfaces contacting the plug face which comply with AWWA C507 and C504.

(8) Valve shaft seals shall be adjustable and comply with AWWA C507.

H. Valve testing.

(1) Plug valves shall be tested in accordance with AWWA C504.

(2) Each valve shall meet the performance, leakage, and hydrostatic tests described in AWWA C504.

(3) The leakage test shall be applied to the face of the plug tending to unseat the valve.

(4) The manufacturer shall furnish certified copies of reports covering proof of design testing as described in AWWA C504.

I. Actuators.

(1) Manual valves eight inches and larger shall have gear actuators and tee wrenches or hand wheels, extension stems, floor stands, etc. as indicated on the plans.

(2) All gearing shall be enclosed in a semi-steel housing and be suitable for running in a lubricant with seals provided on all shafts to prevent entry of dirt and water into the actuator.

(3) Actuating nuts shall be two inches square.

(4) All actuator shafts shall be supported on permanently lubricated bronze bearings.

(5) Actuators shall clearly indicate valve position and an adjustable stop shall be provided to set closing torque.

(6) All exposed nuts, bolts, and washers shall be zinc or cadmium plated.

(7) Valve packing adjustment shall be accessible without disassembly of the actuator.

J. Valve boxes.

(1) All buried valves shall have cast-iron three piece valve boxes.

(2) Valve boxes shall be provided with suitable heavy bonnets and shall extend to such elevation at or slightly above the finished grade surface as directed by MCUD.

(3) The barrel shall be two-piece, sliding type, having 5-1/4 inch shaft.

(4) The upper section shall have a flange at the bottom having sufficient bearing area to prevent settling and shall be complete with cast iron covers.

(5) Covers shall have "Water" cast into the top for all water mains.

(6) The actuating nuts for deeper valves shall be extended to come up to four foot below finished grade.

(7) Care shall be taken while constructing valve boxes to ensure that valve stems are vertical and the cast iron box has been placed over the stem with base bearing on compacted fill and top flush with final grade.

(8) Boxes shall have sufficient bracing to maintain alignment during backfilling.

(9) Contractor shall remove any sand or undesirable fill from valve box prior to final inspection.

Sec. 7.2.9 System connection.

A. Tapping sleeves.

(1) Tapping sleeves shall be mechanical joint sleeves or stainless steel tapping sleeves.

(2) All pressure connections to existing asbestos cement pipe and all "size on size" taps shall utilize mechanical joint sleeves.

B. Mechanical joint sleeves.

(1) Sleeves shall be cast of gray-iron or ductile-iron and have an outlet flange with the dimensions of the Class 125 flanges shown in ANSI B16.1 properly recessed for tapping valve.

(2) Glands shall be gray-iron or ductile iron.

(3) Gaskets shall be vulcanized natural or synthetic rubber.

(4) Bolts and nuts shall comply with ANSI/AWWA C111/A21.11.

(5) Sleeves shall be capable of withstanding a 200 psi working pressure.

C. Stainless steel tapping sleeves.

(1) The shell, lifter bar, armors and test plug shall be stainless steel in accordance with ASTM A-240, Type 304.

(2) Bolts shall be stainless steel in accordance with ASTM A-193, Type 304. Nuts shall be heavy hex stainless steel in accordance with ASTM A-194, Type 304.

(3) Flange shall be ductile iron, ANSI, Class 150.

(4) Tapping valves shall meet the requirements of Section 7.2.8 except that units shall be flanged by mechanical joint ends. Valves shall be compatible with tapping sleeves as specified above and specifically designed for pressure connection operations.

D. Notification and connection to existing mains.

(1) All connections to existing mains shall be made by the contractor only after the connection procedure and his work scheduling has been reviewed and approved by MCUD.

(2) The contractor shall submit a written request to MCUD a minimum of five working days prior to scheduling said connections outlining the following:

(a) Points of Connection, fittings to be used, method of flushing and disinfection if applicable.

(b) Estimated construction time for said connections.

(3) MCUD shall review the submittal within three working days after receiving it and inform the contractor regarding approval or denial of his request. If his request is rejected by MCUD, the contractor shall resubmit his request modifying it in a manner acceptable to MCUD.

(4) All connections shall only be made on the agreed upon date and time. If the contractor does not initiate and complete the connection work in the agreed upon manner, he shall be required to reschedule the said connection by following the procedure outlined above.

E. Installation.

(1) Excavation, backfill, compaction and grading shall comply with the applicable provisions of Section 7.2.4.

(2) Construction details.

(a) Sufficient length of main shall be exposed to allow for installation of the tapping sleeve and valve and the operation of the tapping machinery.

(b) The main shall be supported at sufficient intervals to properly carry its own weight, plus the weight of the tapping sleeve valve and machinery. Any damage to the main due to improper or insufficient supports shall be repaired at the contractor's expense.

(c) The inside of the tapping sleeve and valve, the outside of the main, and the tapping machine shall be cleaned and swabbed or sprayed with ten percent liquid chlorine prior to beginning installation for water system pressure connections.

(d) After the tapping sleeve has been mounted on the main, the tapping valve shall be bolted to the outlet flange, making a pressure tight connection. Prior to beginning the tapping operation, the sleeve and valve shall be pressure tested at 150 psi to ensure that no leakage will occur.

(e) For pressure connections through 12 inches diameter or less the minimum diameter cut shall be ½ inch less than the nominal diameter of the pipe to be attached. For 14 inches through 20 inches, the minimum diameter shall be 1½ inches less. Taps larger than 20 inches shall have an allowable minimum diameter two or three inches less than the nominal diameter of the pipe being attached.

(f) The contractor shall submit the tapping coupon to MCUD.

(g) For pressure connections to wastewater force mains, the tapping valve shall be placed horizontally. After the tapping procedure is complete a plug valve shall be attached to the tapping valve. The tapping valve shall be left in the open position prior to backfilling.

(h) Restrained joint fittings shall be provided to prevent movement of the installation when test pressure is applied.

Sec. 7.2.10 Grease interceptors**.**

A. Grease interceptors shall be sized according to FAC and Section 6.13.2.C(2)(e).

B. Construction.

(1) Grease interceptors shall be constructed of pre-cast concrete with base and walls poured monolithically.

(2) Tests to determine water tightness will be required by MCUD, and shall be made by filling the tank with water to the overflow point at the time of inspection.

(3) Metal, block, brick, fiberglass or sectional tanks of any description shall not be permitted.

(4) The interior wall of the grease interceptors shall be finished smooth and impervious. Voids, pits, or protrusions on or in the inside walls of the grease interceptor are prohibited.

(5) Precast concrete grease interceptors shall have a minimum wall and bottom thickness of four inches.

(6) Precast tanks shall be sufficiently reinforced to resist cracking during handling or installation.

(7) Precast grease tanks shall not be located where vehicular traffic or other overburden loads are anticipated unless the design is approved by MCUD, and the registered engineer certifies that the tank and soil conditions will support the anticipated loads. Where support is provided without bearing on the tank, bearing shall be on the soil independent from the grease tank and reinforced as specified by the engineer.

(8) Tops shall be traffic rated or non-traffic rated.

(9) Tanks shall be so located and installed as to provide ready accessibility to the tanks covers, and interior for ease in inspection, operation and maintenance of the tank.

(10) Minimum inlet and outlet piping size is four inches.

(11) Minimum slope for all tank inlet and outlet piping is 1/8 inches per foot.

(12) All openings shall be sealed with a waterproof, non-shrinking grout, brushed smooth inside and outside.

(13) Tanks located in areas of questionable drainage are required to have a waterproof type frame and cover, with a manhole insert.

(14) Precast structures shall be inspected by MCUD prior to being set into the ground. Any visible reinforcing wire, steel, or honeycombing shall be cause for rejection.

C. Maintenance access.

(1) Maintenance shall be according to MCUD Industrial Pretreatment Ordinance, as amended.

(2) Clean outs shall be provided and installed in conformance with MCUD's specifications at both the inlet and outlet to the tank(s).

(3) Access to the tank(s) for cleaning and inspection shall be provided via a minimum of two, 24 inch diameter rings and covers, located at each end (inlet and outlet) of the tank. The cover shall have the words GREASE cast into it.

Sec. 7.2.11 Industrial Pretreatment shall comply with the Marion County Industrial Pretreatment requirements specified in the Marion County Code of Ordinances Chapter 19, Article II, Industrial Pretreatment, as amended.

Sec. 7.2.12 Security.

A. General.

(1) All facilities shall be locked to prevent unauthorized access.

(2) All access by non-utility personnel shall be approved by the utility operator prior to entrance to facility.

(3) All fencing fabric shall be chain link.

(4) Fence requirements shall comply with the standard detail in this section.

B. Gates.

(1) Gates, at a minimum, shall be two, six foot wide double hung.

(2) If hinged, gates shall swing through 180° from closed to open.

(3) All gates shall be complete with latches, locking device, stops keeper, fabric and braces.

(4) Gates shall be the same height as the fence and the gate fabric shall be the same as the fence fabric.

(5) Gate leaves less than eight feet wide shall have truss rods or intermediate braces and gate leaves eight feet or more in width shall have intermediate braces and diagonal truss rods or shall have tubular members as necessary to provide rigid construction, free from sag or twist.

(6) Gate locks

(a) All facility gates shall remain locked at all times.

(b) MCUD shall supply locks for all MCUD owned facilities.

C. Lighting and cameras

(1) All facility sites shall be equipped with adequate lighting as specified by MCUD.

(2) All lift stations shall have a pole mounted light, connected to the electrical control panel.

(3) Cameras shall be used when determined necessary by MCUD.

Sec. 7.2.13 Water distribution.

A. PVC pipe, joints and fittings.

(1) PVC pipe of nominal diameter, 4 to 12 inches shall be manufactured in accordance with AWWA Standard C900, latest edition.

(2) All PVC pipe shall be DR 18. Pipe shall be the same outside diameter as ductile iron pipe.

(3) Pipes 14 inches diameter and larger shall be manufactured in accordance with AWWA Standard C905, latest edition.

(4) PVC pipe shall have integral bell push on type joints conforming to ASTM D3139.

(5) Fitting joints shall be push-on or mechanical joints conforming to ANSI/AWWA A21.11/C111. Where called for in the approved plans, restrained or flanged joints shall be provided.

(6) Flanged joints shall conform to ANSI Standard B 16.1-125 LB.

(7) Restrained joints shall conform to the standard drawings.

B. Ductile iron pipe and fittings.

All ductile iron pipe of nominal diameter 4 to 20 inches shall be Class 350, pipe sizes larger than 20 inches shall be Class 250 and shall conform to ANSI/AWWA A21.51/Cl5l.

C. All fittings shall be mechanical joint ductile iron or gray iron conforming to ANSI/AWWA A21.10/C110, 250 Psi minimum pressure rating, or ductile iron compact fittings in accordance with ANSI/AWWA A21.53/C153.

D. Service pipe, stops, fittings, and service saddles.

(1) All service lines shall be 1½ inches or 2 inches polyethylene tubing conforming to specifications in AWWA C800 and AWWA C901.

(2) All service lines shall be sleeved in schedule 40 PVC a minimum of one inch larger than the service pipe.

(3) Corporation stops shall be one inch, 1½ inches or 2 inches brass, equipped with connections compatible with the polyethylene tubing and threaded in accordance with specifications in AWWA C800 and AWWA C901. Curb stops shall be sized to match the meter size and conform to the specifications in AWWA C800 and AWWA C901.

(4) Fittings shall be brass, cast and machined in accordance with specifications in AWWA C800 and AWWA C901, with compatible polyethylene tubing connections.

(5) Service saddles.

(a) A service saddle shall be used for all service line taps.

(b) Service saddles shall be double stainless steel straps and fusion epoxy or nylon coated ductile iron body with stainless steel hardware.

(c) Service saddles shall be anchored by a minimum four bolt pattern on a ductile iron saddle body.

(d) Service saddles for PVC pipe shall have the double strap sized exactly to the pipe outside diameter.

(e) Sealing gaskets shall be BUNA-N rubber and straps shall be corrosion resistant alloy steel.

E. Pipe crossings.

(a) Water mains shall be above the sewer or reclaimed water pipe whenever they cross.

(b) Adequate structural support for both the water main and sewers shall be provided to prevent excessive deflection of joints and settling.

(c) The length of PVC or ductile iron pipe being crossed shall be minimum 18 feet. The point of crossing shall be centered so that the joints will be equidistant and as far as possible from the water main.

F. Disinfection of water mains.

(1) Before being placed in service, all new water mains shall be chlorinated in accordance with the specifications below and the procedures outlined in AWWA C651 "Standard Procedure for Disinfecting Water Mains".

(2) Flushing.

(a) Sections of pipe to be disinfected shall first be flushed (full diameter) to remove any solids or contaminated material that may have become lodged in the pipe.

(b) If no hydrant is installed at the end of the main, then a blow-off valve shall be provided and sized to develop a velocity of at least 2.5 feet per second in the main.

(c) All taps required for chlorination or flushing purpose, or for temporary or permanent release of air shall be provided for by the contractor as a part of the construction of water mains. After the disinfection, all such taps two inches and smaller shall be plugged with a brass plug in the tapping sleeve and those larger than two inches will be valved and blind flanged.

(3) Disinfection criteria.

(a) Before being placed into service, all new mains and repaired portions of, or extensions to existing mains shall be disinfected using chlorine and must successfully pass bacteriological testing.

(b) Chlorine shall be applied as liquid chlorine, or a mixture of water and high-test calcium hypochlorite as specified in AWWA B300. Contractor shall assume responsibility for safe handling of chlorine and shall meet requirements of OSHA and other regulatory agencies for safe handling of chlorine.

(c) The point of application of the chlorinating agent shall be at the beginning of the pipe line extension or any valved section of it, through a corporation stop inserted in the pipe. The water injector for delivering the chlorine-bearing water into the pipe shall be supplied from a tap made on the pressure side of the gate valve controlling the flow into the pipe line extension. Alternate points of applications may be used when approved or directed by MCUD.

(d) Valves shall be manipulated by MCUD personnel so that the strong chlorine solution in the line being treated will not flow back into the line supplying the water.

(e) Treated water shall be retained in the pipe at least 24 hours. After this period, the chlorine residual at pipe extremities and at other representative points shall be at least 25 mg/l.

(f) All valves or other appurtenances shall be operated while the pipe line is filled with the chlorinating agent and under normal operating pressure.

(g) All chlorinated water shall be thoroughly flushed from the newly laid pipe at its extremity until the replacement water throughout its lengths shows a free chlorine residual not in excess of that normally carried in the system.

(h) Water samples collected on two consecutive days after flushing the treated piping system as described in FAC 62-555.

(i) The original chlorination procedure shall be repeated as necessary by the contractor until satisfactory test results are obtained.

(j) The developer may request testing by a private laboratory in order to expedite testing. All such bacteriological analysis must be performed by a laboratory certified by the State of Florida.

(k) Proper chain of custody procedures must be followed and samples shall only be collected by certified personnel in the presence of MCUD personnel.

(l) Copies of testing results and all related correspondence with the FDEP shall be submitted to MCUD.

G. Fire hydrants.

(1) Material.

(a) Fire hydrants shall comply with AWWA Standard C502 for fire hydrants for water works service and capable of producing 1,500 gpm of flow.

(b) Each hydrant shall have 6 inches mechanical joint ends with harnessing lugs ("dog ears") and shall open by turning to the left (counter-clockwise).

(c) Fire hydrant shall be of ample length for 42 inches depth of bury. It shall be provided with two 2-1/2 inch hose nozzles and one 4-1/2 inch pumper nozzle, all having National Standard

hose threads.

(d) Nozzles shall have caps attached by chains.

(e) Operating nuts shall be AWWA Standard (pentagonal, measuring 1-1/2 inches point to flat).

(f) Fire hydrants shall be equipped with "O-Ring" packing.

(2) Painting.

(a) All iron parts of the hydrant both inside and outside shall be painted, in accordance with AWWA C502.

(b) All inside surfaces and the outside surfaces below the ground line shall be coated with asphalt varnish in accordance with AWWA C550.

(c) They shall be covered with two coats, the first having dried thoroughly before the second is applied.

(d) The outside of the hydrant above the finished ground line shall be thoroughly cleaned and thereafter painted with one coat of paint of a durable composition, and one additional coat of red paint.

(e) Bonnets shall be painted in accordance with fire requirements as specified in Section 6.17.

(3) Construction details.

(a) Hydrants shall be plumb and shall be set so that the center of the lowest hose connection is at least 18 inches above the surrounding finished grade.

(b) All hydrants shall be inspected in the field upon delivery to the job site to insure proper operation before installation.

(c) The resetting, moving, or reconnecting of existing hydrants shall be handled in a manner similar to a new installation.

(d) Hydrant shall be constructed in accordance with the standard details.

(e) Fire hydrants shall be located at a maximum of 1,000 foot intervals as measured along the length of the right-of-way.

(f) Final field location of all hydrants shall be as approved by MCUD.

(g) All hydrants shall be located not less than 7 feet from any physical feature which may obstruct access or view of any hydrant unless otherwise approved by MCUD.

H. Water meters.

Water meters shall be furnished by MCUD at the contractor's expense.

Sec. 7.2.14 Water wells. All water well development shall comply with FAC.

Sec. 7.2.15 Wastewater collection system.

A. Gravity sewers.

(1) General

Pipe used in gravity sewer construction shall be polyvinyl chloride (PVC) or ductile iron pipe (DIP). Where reference is made to an ASTM, ANSI or AASHTO designation, it shall be the latest revision.

(2) Pipe materials

(a) PVC gravity sewer pipe.

1. PVC gravity sewer pipe (4 - 15 inches), ASTM D3034, Standard Dimension Ratio (SDR) 26. Uniform minimum "pipe stiffness" at five percent deflection shall be 46 psi. The joints shall be integral bell elastomeric gasket joints manufactured in accordance with ASTM D3212 and ASTM F477. Applicable Uni-Bell Plastic Pipe Association standard is UNI-B-4.

2. PVC gravity sewer pipe (18 - 27 inches), ASTM F679, SDR 26. Uniform minimum "pipe

stiffness" at five percent deflection shall be 46 psi. The joints shall be integral bell elastomeric gasket joints manufactured in accordance with ASTM D3212 and ASTM F477. Applicable Uni-Bell Plastic Pipe Association standard is UNI-B-7.

3. All PVC pipe shall bear the NSF-DW seal. The minimum typical length of pipe shall be 13 feet.

(b) DIP gravity sewer pipe.

1. Ductile iron pipe shall conform to ANSI/AWWA A21.51/Cl5l, class thickness designed per ANSI/AWWA A21.50/C15O, with mechanical or push on joints.
2. All ductile iron pipe with diameters of 4 to 20 inches shall have a pressure rating of 350 psi.
3. Ductile iron pipe 24 inches and larger shall have a pressure rating of 300 psi.

(3) Joint materials.

(a) PVC sewer pipe joints shall be flexible elastomeric seals per ASTM D 3212.

(b) Ductile iron pipe and fitting joints shall be "push-on" or mechanical joints conforming to ANSI/AWWA A21.11/C110.

(c) Joints between pipes of dissimilar materials shall be made with a flexible mechanical compression coupling with No. 304 stainless steel bands.

(4) Fittings.

(a) All fittings shall be designed for use on the pipe material being installed.

(b) Wyes shall be provided in the gravity sewer main for service lateral connections, unless otherwise specified.

(c) Wyes shall be 6 inches inside diameter, unless otherwise approved by MCUD. Plugs for stub outs shall be of the same material as the pipe, and gasketed with the same gasket material as the pipe joint, or be of material approved by MCUD. The plug shall be secured to withstand test pressures specified in this section.

(d) Plugs for pipe branches, stubs or other open ends which are not to be immediately connected shall be made of an MCUD approved material and shall be secured in place with a joint comparable to the main line joint.

(5) Pipe bedding.

(a) Contractor shall ensure pipe is properly bedded to proper grade ahead of pipe laying operation. Bedding shall provide a firm, unyielding support along the entire pipe length.

(b) Where the trench has been excavated below the required depth for pipe bedding material placement, contractor shall fill the excess depth with pipe bedding material to the proper grade, unless excavation depth was directed by MCUD.

(c) Contractor shall excavate bell holes at each joint to permit proper assembly and inspection of the entire joint.

B. Manholes.

(1) General.

(a) Manholes shall be leak-tight and constructed of pre-cast concrete units.

(b) A 10 foot wide access road shall be provided for all manholes which are located outside of county roadways. The top 8 inches of the access road shall be stabilized to accommodate heavy vehicles.

(c) Concrete surfaces shall have form oil, curing compounds, dust, dirt and other interfering materials removed by brush or sand blasting.

(d) Interior surfaces of manholes shall have a protective MCUD approved coating with a

minimum dry mil thickness of 16 mils. Exterior surfaces shall have a protective MCUD approved coating with a minimum dry mil thickness of 9 mils. Coatings shall be applied in two applications by the manhole manufacturer in strict accordance with the paint manufacturer's recommendations.

(e) The minimum wall shall be 5 inches, and have a minimum base of 8 inches. Pre-cast manholes shall be constructed in compliance with the standard details.

(2) Manholes shall be hydraulically tested using the method specified in ASTM C969. All manholes shall be inspected by MCUD prior to acceptance. All manholes failing to meet the specifications set forth above shall be reconstructed or replaced by the contractor to comply with these specifications. Pressure grouting of manholes for repair shall not be accepted.

(3) Pre-Cast base and manholes.

(a) A pre-cast base section shall be carefully placed on the prepared bedding so as to be fully and uniformly supported in true alignment and making sure that all entering pipes can be inserted on proper grade.

(b) Pre-cast manhole sections shall be handled by lift rings or non-penetrating lift holes. Such holes shall be filled with non-shrink grout after installation of the manhole.

(c) The first pre-cast section shall be placed and carefully adjusted to true grade and alignment. All inlet pipes shall be properly installed so as to form an integral watertight unit. The sections shall be uniformly supported by the base structure, and shall not bear directly on any of the pipes.

(d) Pre-cast sections shall be placed and aligned to provide vertical alignment with a one-fourth inch maximum tolerance per 5 feet of depth. The completed manhole shall be rigid, true to dimensions, and watertight.

(e) Base sections shall be placed on bedding rock conforming to the requirements in Section 7.2.4. The bedding rock shall be firmly tamped and made smooth and level to assure uniform contact and support of the pre-cast element. Refer to the standard details for additional bedding details.

(4) Pre-Cast concrete sections.

(a) Pre-cast manholes shall conform to specifications for pre-cast reinforced concrete manhole sections, ASTM designation C478.

(b) Concrete for manholes shall be Type II, 4000 psi at 28 days.

(c) Barrel, top and base sections shall have tongue and groove joints.

(d) All jointing material shall be cold adhesive preformed plastic gaskets, conforming to FDOT specifications.

(e) The date of manufacture and the name or trademark of the manufacturer shall be clearly marked on each pre-cast section.

(f) Sections shall be cured by an industry approved method for at least 28 days prior to painting and shall not be shipped until at least two days after having been painted.

(g) Pre-cast concrete top slabs shall be used where cover over the top of the pipe is less than four feet.

(h) Lift rings or non-penetrating lift holes shall be provided for handling pre-cast manhole sections. Non-penetrating lift holes shall be filled with non-shrink grout after installation of the manhole sections. Sections rejected after delivery to the job shall be marked for identification and shall be removed from the job at once. All sections which have been damaged after delivery will be rejected and, if already installed, removed and replaced, entirely at the contractor's expense.

(i) At the time of inspection, the sections will be carefully examined for compliance with the specified ASTM designation, and with the approved manufacturer's drawings. All sections shall be inspected for general appearance, dimension, "scratch-strength" blisters, cracks, roughness, soundness, etc. The surface shall be dense and close-textured.

(5) Castings.

(a) Gray iron castings for manhole frames, covers, adjustment rings and other items shall conform to FDOT Standard Specifications for Road and Bridge Construction as amended.

(b) Castings shall be true to pattern in form and dimensions and free of pouring faults and other defects which would impair their strength, or otherwise make them unfit for the service intended.

(c) The seating surfaces between frames and covers shall be machined to fit true. No plugging or filling will be allowed. Lifting or "pick" holes shall be provided, but shall not penetrate the cover.

(d) Casting patterns shall conform to those shown or indicated on the standard details.

(e) Frames shall be suitable for the future addition of a cast iron ring for upward adjustment of top elevation. In certain locations bolt down covers and gasketed covers shall be located as shown on the drawings (i.e. flood prone areas).

(f) Casting shall be fully bedded in mortar with adjustment brick courses placed between the frame and manhole. Bricks shall be a minimum two and maximum four courses. Mortar shall conform to ASTM C-270, type M, and the bricks shall be clay and conform to ASTM C-216, grade SW, size 3 1/2 inches (w) x 8 inches (l) x 2 1/4 inches.

(g) Top of manhole castings located in pavement, shouldered areas, and sidewalks shall be set flush with grade. Top of manhole castings located outside these areas shall be placed two inches above grade.

(6) Flow channels and piping.

(a) Manhole flow channels shall be as shown in the standard details, with smooth and carefully shaped bottoms, built up sides and benching constructed using cement and brick with no voids. Channels shall conform to the dimension of the adjacent pipe and provide for evenly changes in size, grade and alignment. Cement shall be Portland Cement Type II only.

(b) Special care shall be taken to see that the openings through which pipes enter the structure are provided with watertight connections. For ductile iron and PVC pipe, connections shall conform to ASTM C 923.

(c) Drop manhole connections shall conform in all respects to details shown on the standard details.

(d) All newly constructed manholes shall be cleaned of any accumulation of silt, debris, or foreign matter of any kind, and shall be free from such accumulations at the time of final inspection.

(e) No visible leakage in the manhole or at pipe connections shall be permitted.

(f) The flow channel through manholes shall be made to conform in shape and slope to that of the sewers. Vertical and/or horizontal flow direction changes in excess of 90° shall not be included in sewer alignments without MCUD approval.

C. Wastewater service laterals.

(1) General.

(a) Service laterals and fittings shall be a minimum of 6 inches in diameter.

(b) Pipe, fittings and joints shall be PVC DR26 or DI pipe and shall conform to the requirement for gravity sewer construction in this code.

(c) Service laterals shall be connected using a wye fitting, as shown in the standard details.

(d) On existing mains where no wye is provided or available, connection shall be made by either a machine-made tap and suitable saddle, or a cast-in-place doghouse manhole.

(2) Construction details.

(a) Excavation and backfilling for service sewers shall conform to the requirements of Section 7.2.4, except that no backfill in excess of that required to hold the pipe in true alignment shall be placed prior to inspection.

(b) Pipe laying and jointing, except as hereinafter provided, shall in general conform to the requirements of Section 7.2.13. During the pipe laying and jointing, the service lateral shall be kept free of any water, dirt or objectionable matter.

(c) Pipe shall be laid with a minimum slope in accordance with Table 6.15.3. Pipe shall be laid in a straight line at a uniform grade between fittings.

(d) Service laterals shall terminate at the right-of-way line in accordance with the standard details. Water-tight factory made plug(s) shall be installed in the clean out at the end of each service lateral.

(e) Service sewers laterals shall meet the inspection requirements specified in Section 7.2.15.D.

(f) The contractor shall restore all paved surfaces, curbing, sidewalks or other surfaces to their original or better condition. All surplus material and temporary structures, as well as all excess excavation shall be removed and the entire site shall be left in a neat and clean condition.

(g) The exact location of the termination point of each installed service lateral shall be marked by etching or cutting an "S" in the concrete curb. Where no curb exists, locations shall be adequately marked by a method approved by MCUD. Brass or aluminum markers may also be used.

D. Testing and inspection for acceptance of gravity sewers shall comply with Section 7.2.7.F.

E. Wastewater force mains.

(1) General.

Pipe used in wastewater force main systems shall be either PVC or DIP.

(2) Pipe and fittings.

(a) PVC pipe.

1. Pipe four to 12 inches diameter shall be manufactured in accordance with AWWA standard C900, latest edition and have a DR of 25.
2. The PVC pipe shall have a minimum working pressure rating of 100 psi.
3. Pipe shall be the same outside diameter as ductile iron pipe.
4. Pipe 14 inches diameter and larger shall be manufactured in accordance with AWWA Standard C905, Latest Edition, and shall have a DR of 25.
5. All PVC pipe under pavement must be sleeved or meet FDOT Standard Specifications for Road and Bridge Construction as amended.
6. Pipe shall have integral bell push on type joints conforming to ASTM D3139.
7. Pipe fittings used with PVC pipe shall conform to Section 7.2.13.

(b) Ductile iron pipe.

1. All ductile iron pipe of nominal diameter four to 20 inches shall be Class 350, pipes larger than 20 inches shall be Class 250 and shall conform to ANSI/AWWA A21.51/Cl5l.
2. All fittings shall be mechanical joint ductile iron or gray iron conforming to ANSI/AWWA

A21.10/C110, 250 psi minimum pressure rating, or ductile iron compact fittings in accordance with ANSI/AWWA A21-53/Cl53.

3. Joints for ductile iron pipe and fittings shall be push-on or mechanical joints conforming to ANSI/AWWA A21.11/C111, unless otherwise called for on the DRAWINGS. Restrained or flanged joints shall be provided where specified on the Drawings. Flanged joints shall conform to ANSI Standard B16.1-125 LB. Restrained joints shall conform to the tables in the standard drawings.

(3) Force main construction. Requirements specified in Section 7.2.6. shall apply.

(4) Hydrostatic tests. Requirements specified in Section 7.2.7.F. shall apply except that all pipe sections to be tested shall be subjected to a hydrostatic pressure of 100 psi.

(5) Final cleaning.

(a) Prior to final inspection and acceptance of the force main by MCUD, the contractor shall flush and clean all parts of the system.

(b) Flushing and cleaning shall remove all accumulated construction debris, rocks, gravel, sand, silt, and other foreign material from the sewer system at or near the downstream end.

F. Upon MCUD's final inspection of the pressure pipe systems, if any foreign matter is still present in the system, contractor shall clean the sections and portions of the lines as required.

Sec. 7.2.16 Lift Stations.

A. Site.

(1) Lift Station sites shall be minimum 50 feet by 50 feet, unless otherwise determined by MCUD.

(2) Lift Station sites shall be conveyed to MCUD.

(3) The boundary of all new lift stations shall be located a minimum of 50 feet away from any vertical structure.

(4) Site shall have a 6 inches x 18 inches concrete curb around the perimeter as shown in the construction details, except at the gates.

(5) Chain link fencing that complies with Section 7.2.12 shall be set in the centerline of the curb.

(6) All pervious area shall be covered with 4 inches of FDOT #57 stone, with a 60 mil geofabric weed control liner underneath. The stone shall be flush with the wet well elevation.

(7) The concrete driveway shall be 14 feet wide and 6 inches thick with 6 inch x 6 inch welded wire fabric. The concrete shall have a minimum strength of 3,000psi.

B. Access.

Where no paved access is existing to the lift station site, a 12 foot wide paved asphalt access road (1.5 inch thick FDOT SP-9.5 Asphaltic Concrete, 6 inch thick LBR 40 Limerock Base, and 6 inch thick FBV 75 Sub-Base) shall be provided by the developer.

C. Construction.

(1) Wet wells to be owned and operated privately shall comply with all applicable Federal, state, and local regulations for construction and connection to central service.

(2) Wet wells to be conveyed to MCUD shall comply with all applicable federal, state, local regulations, and the engineered design approved by MCUD.

Sec. 7.2.17 Reclaimed Water Systems.

A. These specifications cover the pipe, fittings, and accessory items used for reclaimed water transmission and distribution systems.

(1) Pipe used in reclaimed water transmission and distribution systems shall either be PVC, DIP, or HDPE.

(2) All PVC pipe and appurtenances shall be solid color Pantone Purple 522-C. All DIP and HDPE pipe and appurtenances shall be marked per Section 7.2.19.B.2.

(3) The contractor shall be responsible for all materials furnished and storage of same, until the date of substantial completion.

(4) The contractor shall replace at his own expense all materials found to be defective or damaged in handling or storage.

(5) The contractor shall, if requested by MCUD, furnish certificates, affidavits of compliance, test reports, or samples for check analysis for any of the materials specified herein.

(6) All pipe delivered to the project site for installation is subject to random testing for compliance with the designated specifications.

(7) The reclaimed water pipe shall be inspected and tested as required in Section 7.2.7.F.

B. Pipe materials.

(1) PVC pipe.

(a) All PVC pipe of nominal diameter 4 to 12 inches shall be manufactured in accordance with AWWA standard C900, latest edition, and shall have a DR18.

(b) Pipe 14 inches diameter and larger shall be manufactured in accordance with AWWA C905, latest edition, and shall have a DR18.

(c) PVC pipe shall have the same outside diameter as DIP.

(d) All PVC pipe under pavement must be sleeved, as required.

(e) PVC pipe shall have integral bell push on type joints conforming to ASTM D3139.

(f) Fittings used with PVC pipe shall conform to Section 7.2.13.B.

(2) Ductile iron pipe and fittings.

(a) All DIP of nominal diameter four to 20 inches shall be Class 350. Pipe larger than 20 inches shall be Class 250 and shall conform to ANSI/AWWA A21.51/C151.

(b) Any fittings required shall be mechanical joint ductile iron or gray iron conforming to ANSI/AWWA A21.10/C110, 250 psi minimum working pressure rating, or ductile iron compact fittings in accordance with ANSI/AWWA A21.53/C153.

(c) Joints for DIP and fitting joints shall be push-on or mechanical joints conforming to ANSI/AWWA A21.11/C111. Where called for in the plans, restrained or flanged joints shall be provided. Flanged joints shall conform to ANSI Standard B16.1-125 lb. Restrained joints shall conform to the tables in the standard details.

(d) Primer and field coats shall be compatible and shall be applied in accordance with the manufacturers' recommendations.

(e) All DIP reclaimed water mains shall be marked with a continuous stripe located within the top 90° of the pipe. The stripe shall be a minimum two inches in width and shall be Pantone Purple 522-C in color. Backfill shall not be placed for 30 minutes following paint application.

(f) DIP shall be polyethylene encased (8 mil) where shown on the drawings or required by MCUD in accordance with ANSI/AWWA A21.51/C105.

C. Pipe installation for reclaimed water mains.

(1) Pipe shall be installed in accordance with the manufacturer's specifications and instructions for the type of pipe used and applicable AWWA standards, such as AWWA 600 and C603, unless otherwise stated in these specifications.

(2) All pipe, fittings and appurtenances shall be handled in such a manner as will prevent damage as specified in Section 7.2.7.B.

(3) When reclaimed water mains are laid in the vicinity of pipe lines designated to carry potable

water or raw wastewater they shall meet horizontal and vertical separation distance requirements specified in Section 7.2.7.E.

(4) The trench preparation and bedding for the reclaimed water main shall meet the requirements specified in Section 7.2.4.E.

(5) Hydrostatic testing of the reclaimed water mains shall comply with the requirements specified in Section 7.2.7.F.

(6) Before being placed into service, all new reclaimed water mains shall be chlorinated in accordance with Section 7.2.13.3. However, bacteriological tests will not be required.

D. Service lines, stops, fittings and service saddles

(1) Service line shall be 1 inch, 1-1/2 inches or 2 inches polyethylene tubing conforming to specifications in AWWA C800 and AWWA C901. Service lines four inches and above shall be PVC pipe conforming to paragraph c.(1) above. All service line shall be lavender in color.

(2) Corporation stops shall be 1 inch, 1-1/2 inches or 2 inch brass, equipped with connections compatible with the polyethylene tubing and threaded in accordance with specifications in AWWA C800 and AWWA C901. Curb stops shall be sized to match the meter size and conform to the specifications in AWWA C800 and AWWA C901.

(3) Fittings shall be brass, cast and machined in accordance with specifications in AWWA C800 and AWWA C901, with compatible polyethylene connections.

(4) Service saddles shall be used for all service line taps. Service saddles shall be double stainless steel straps, anchored by a minimum four bolt pattern on a ductile iron saddle body. Service saddles for PVC pipe shall have the double strap sized exactly to the pipe outside diameter. Sealing gaskets shall be BUNA-N rubber.

(5) MCUD may require fusion epoxy or nylon coated ductile iron body with stainless steel hardware in areas designated as corrosive.

E. Location and identification.

(1) Service lines.

(a) The location of all service lines shall be as shown on the drawings and shall be either single or dual service.

(b) Curbed streets shall be marked by etching or cutting a "RW" in the concrete curb for each installed service.

(c) Where no curb exists, locations shall be adequately marked by a method approved by MCUD.

(2) Water mains.

(a) All non-metallic reclaimed water mains shall be installed with a continuous, insulated 14 gauge copper wire installed directly on top of the pipe for location purposes.

(b) Detectable tape may be used in lieu of copper wire and shall be placed one foot above the top of the pipe. See standard details.

(c) All lettering shall appear legibly on pipe and shall run the entire length of the pipe.

(d) Lettering shall read as is acceptable for the intended use.

F. Valves, hydrants and accessories for reclaimed water mains.

(1) The resilient seat gate valves shall meet the requirements of AWWA C509 and the Section 7.2.8.B.

(2) All shut-off valves 16 inches and larger shall be butterfly valves and shall conform to the AWWA C504 and Section 7.2.8.C. of these Specifications.

(3) All valves shall be inspected and installed in accordance with the AWWA Standards for the type of valve and connection and shall comply with the requirements specified in Section 7.2.8.

(4) All buried valves shall have cast-iron three piece valve boxes and shall comply with the

requirements specified in Section 7.2.8, except that covers shall have "Reclaimed Water" cast into the top.

(5) The air release valves for use in the reclaimed water mains shall be installed as shown on the standard drawings and shall comply with the requirements specified in Section 7.2.8.E.

(6) Fire hydrants installed on the reclaimed water mains shall meet the requirements specified in Section 6.17 except that the exterior barrel color shall be Pantone Purple 522-C, and the cap colors shall reflect the pressure rating of the hydrant.

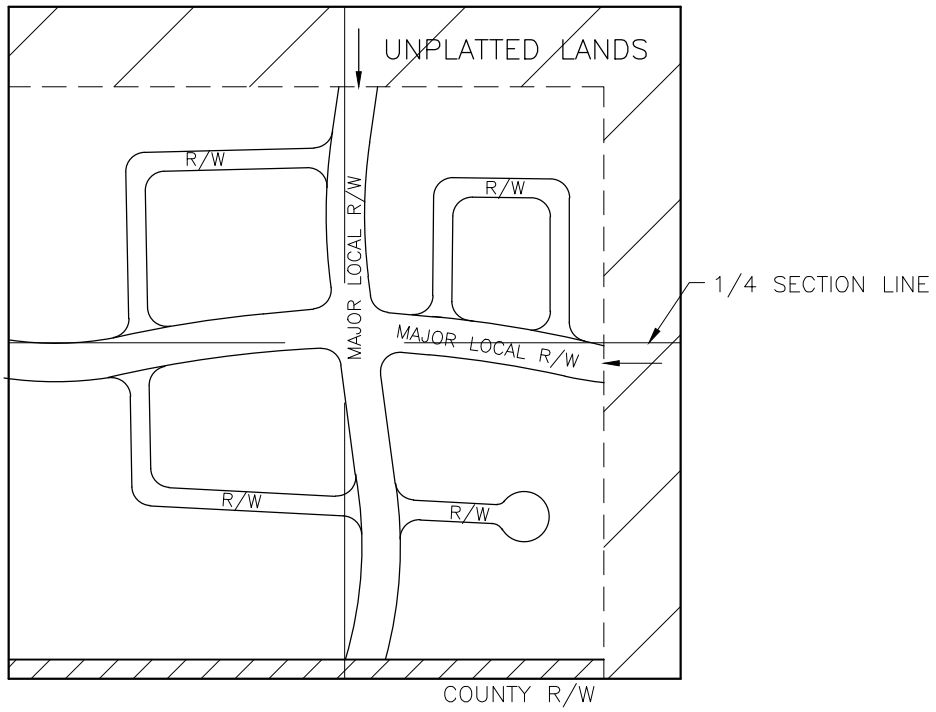

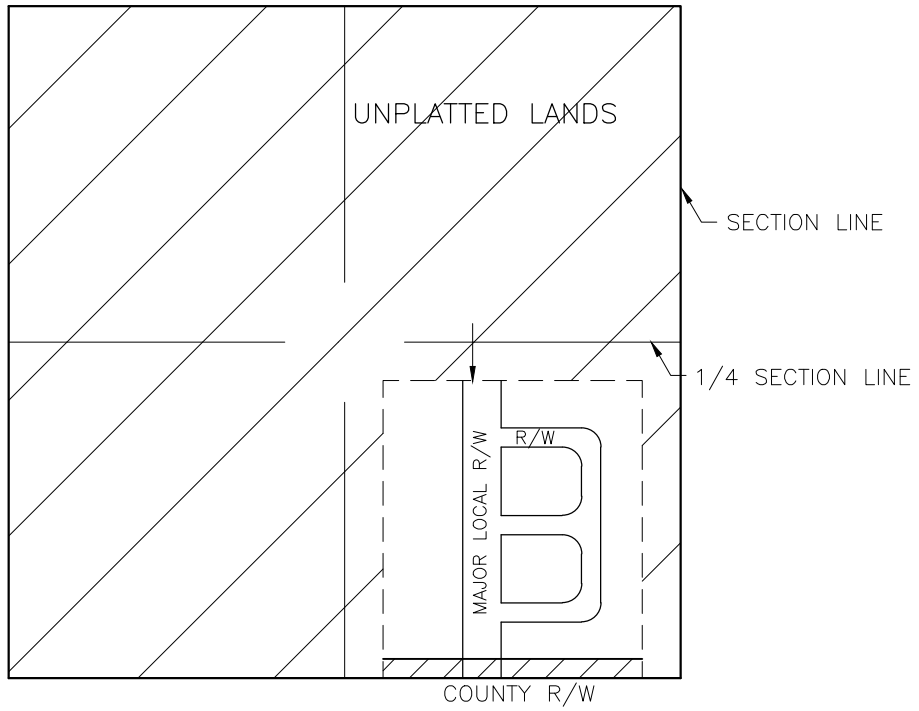

LEGEND

R/W	RIGHT–OF–WAY
	RIGHT–OF–WAY REQUIRED ON SECTION AND QUARTER SECTION LINES (SEE TABLE 6.11.2–1)
	ACCESS TO BE PROVIDED TO ADJACENT UNPLATTED LAND
	PROPOSED DEVELOPMENT BOUNDARY

Marion County FLORIDA OFFICE OF THE COUNTY ENGINEER	MCBCC ADOPTED XX/XX/XX REVISION #	ACCESS TO ADJACENT UNPLATTED LANDS	7 EN 001

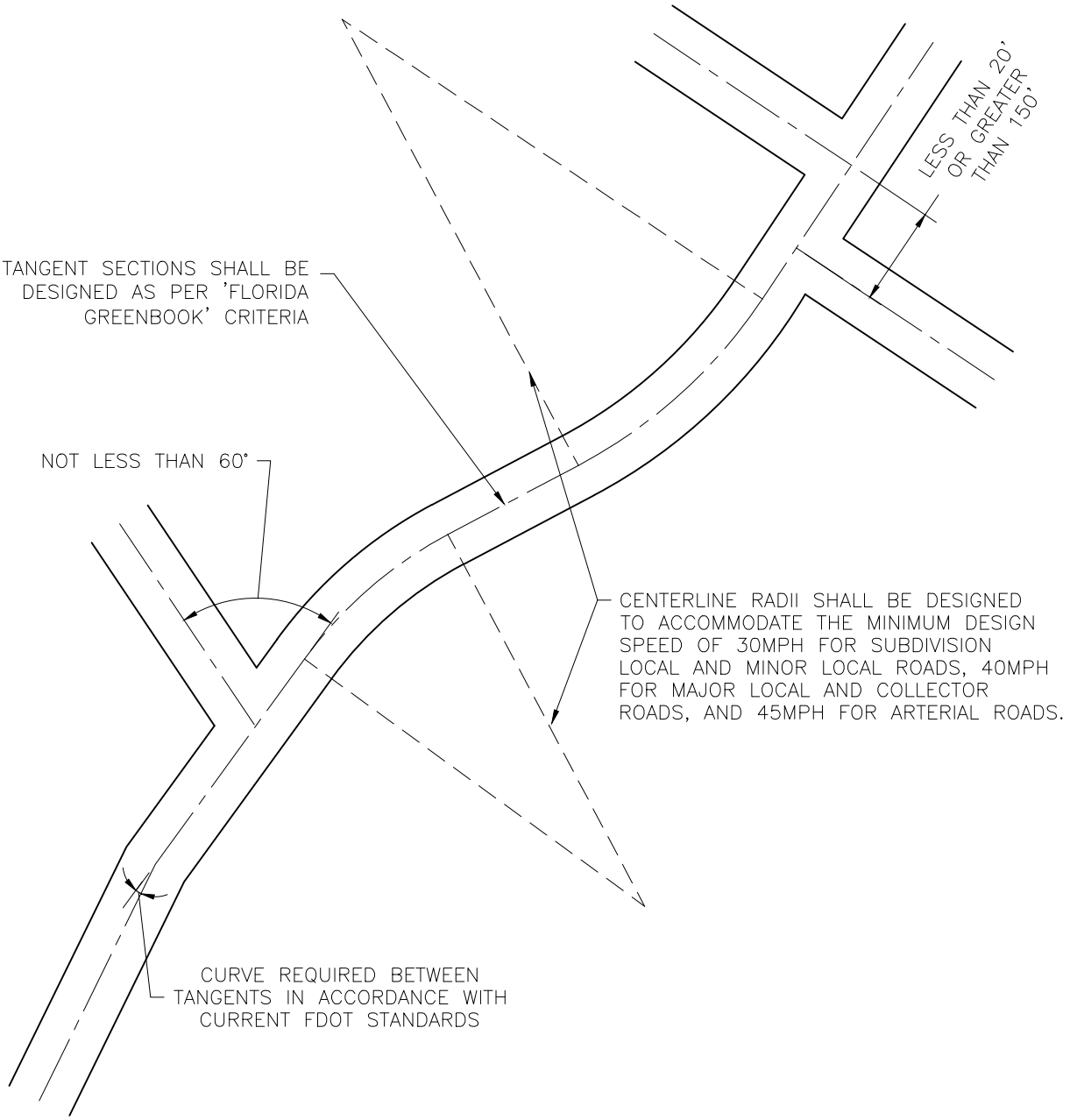

Marion County FLORIDA OFFICE OF THE COUNTY ENGINEER	MCBCC ADOPTED XX/XX/XX REVISION #	SUBDIVISION MINIMUM CENTERLINE RADII, INTERSECTION DEFLECTION LIMITS, OPPOSING INTERSECTIONS	7 EN 002

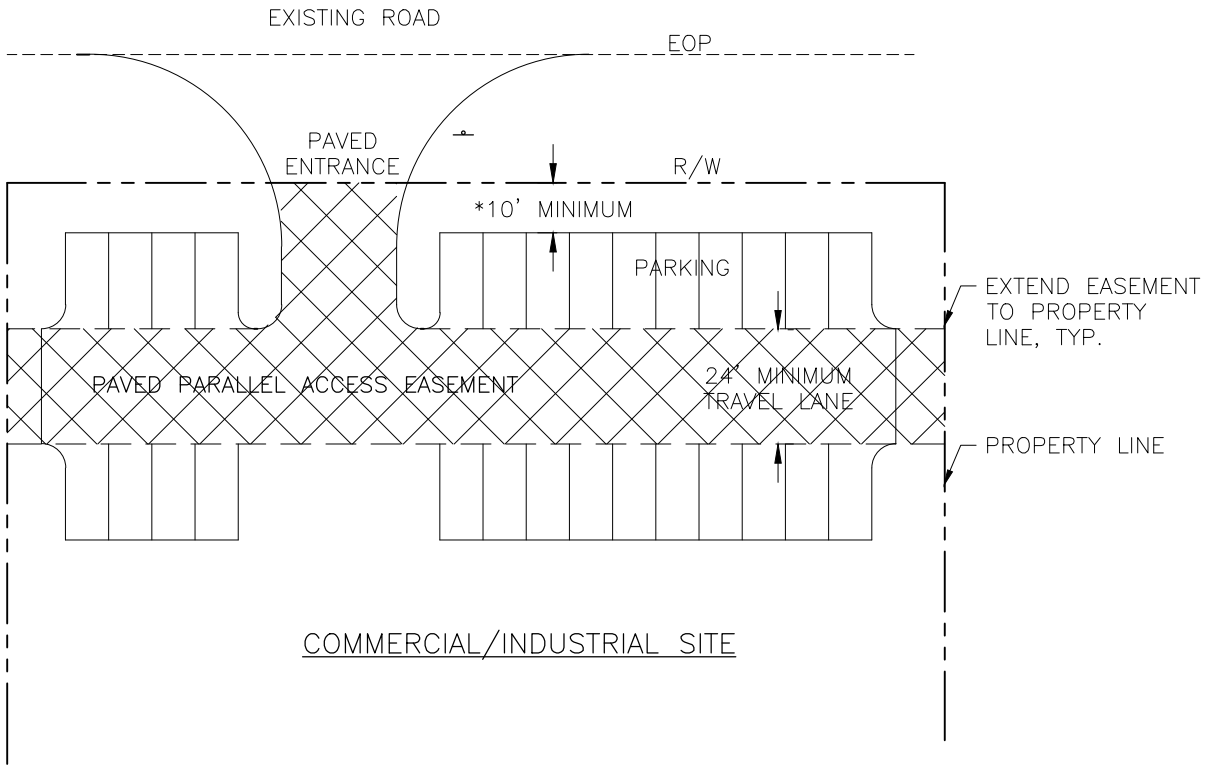

LEGEND

R/W	RIGHT OF WAY
	STOP SIGN
EOP	EDGE OF PAVEMENT
TYP.	TYPICAL

NOTES:

1. NEW PAVED PARALLEL ACCESS SHALL BE CONNECTED TO ANY EXISTING PARALLEL ACCESS ON ADJOINING PROPERTY.
2. * AREA WILL BE USED FOR SIDEWALK AND BUFFER AS APPLICABLE.

Marion County FLORIDA OFFICE OF THE COUNTY ENGINEER	MCBCC ADOPTED XX/XX/XX REVISION #	PARALLEL ACCESS	7 EN 003

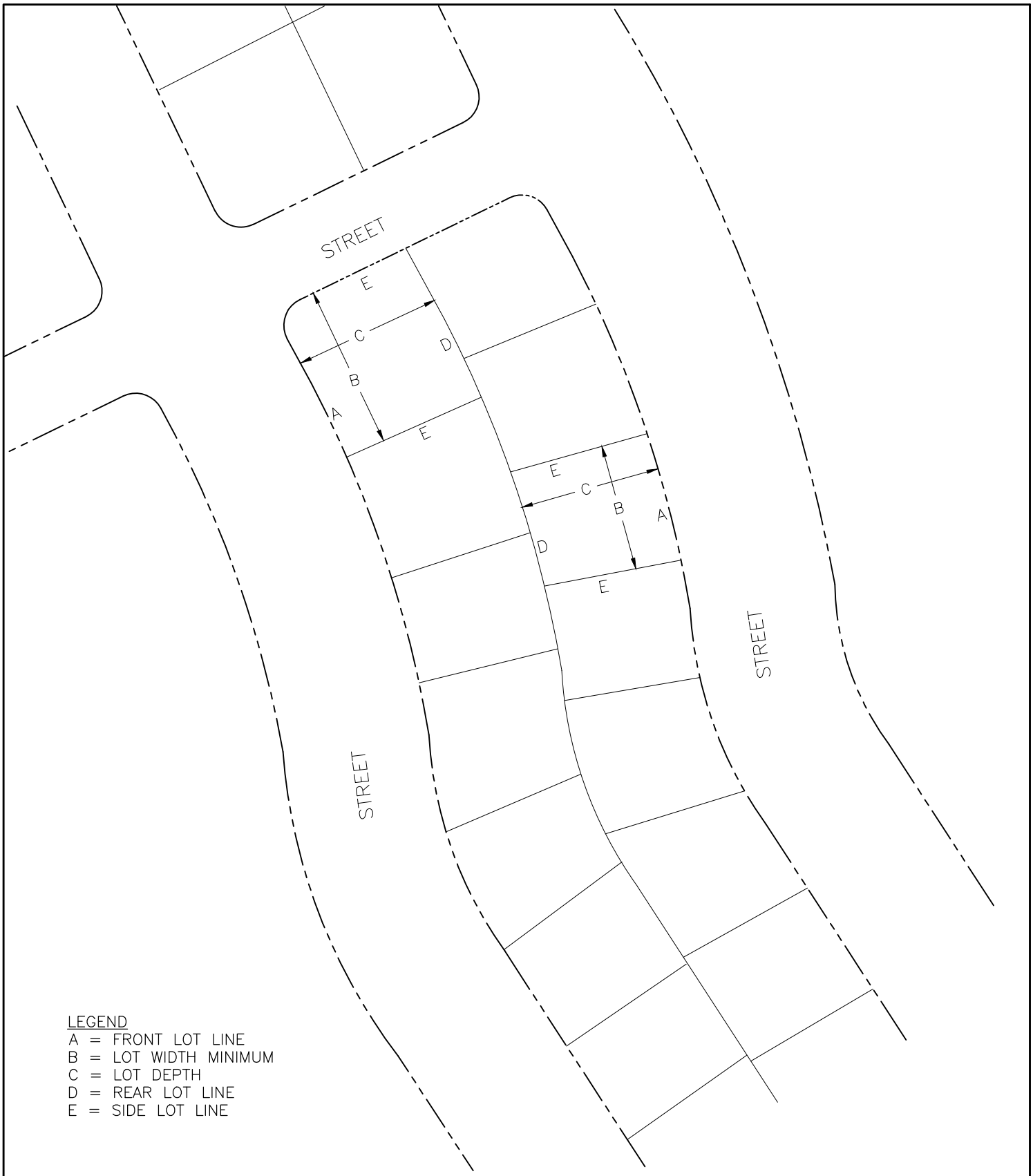

LEGEND
A = FRONT LOT LINE
B = LOT WIDTH MINIMUM
C = LOT DEPTH
D = REAR LOT LINE
E = SIDE LOT LINE

NOTE:
ALL LOT DIMENSIONS AND SETBACKS SHALL COMPLY WITH ARTICLE 4 OF THIS CODE AND HEALTH DEPARTMENT REGULATIONS.

Marion County FLORIDA OFFICE OF THE COUNTY ENGINEER	MCBCC ADOPTED XX/XX/XX REVISION #	LOT LINES & BUILDING LINES	7 EN 004

SUBDIVISION GROUP	R1	R2	R3	R4
RESIDENTIAL	60'	40'	25'	25'
COMMERCIAL/ INDUSTRIAL	60'	45'	25'	25'

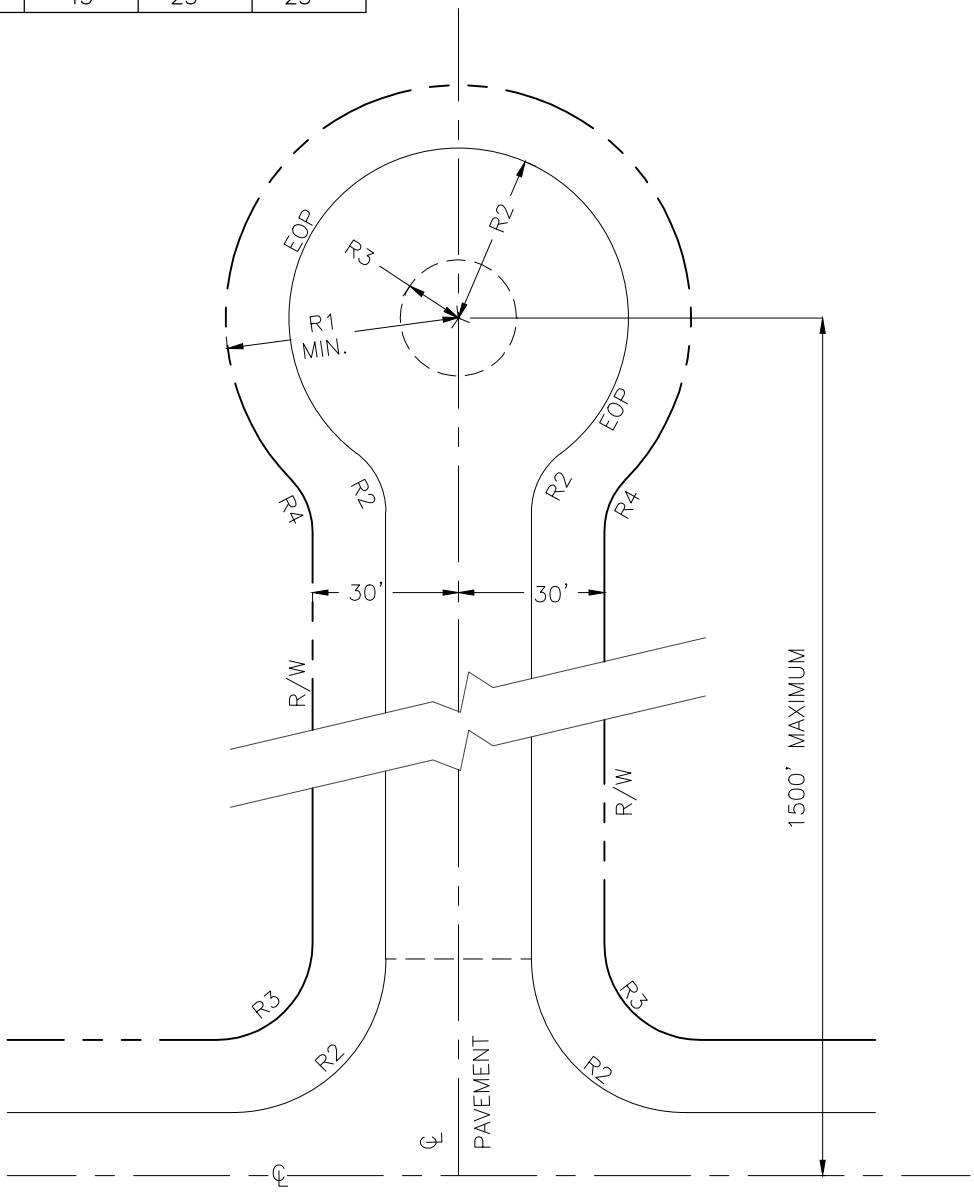

LEGEND

R	RADIUS
EOP	EDGE OF PAVEMENT
R/W	RIGHT-OF-WAY
℄	CENTERLINE
MIN.	MINIMUM

NOTES:

1. ROOT BARRIERS OR OTHER PAVEMENT PROTECTION IS REQUIRED IF TREES ARE PLACED IN ISLANDS.
2. AN OPTIONAL GRASSED ISLAND NO GREATER THAN 50' IN DIAMETER MAY BE CONSTRUCTED IN THE CENTER OF A CUL-DE-SAC.
3. CENTER OF CUL-DE-SAC MAY BE OFFSET 30' FROM CENTERLINE.
4. R/W WIDTH AND CUL-DE-SAC RADIUS ARE ALLOWED TO VARY TO 50'. ALL R/W WIDTHS, CUL-DE-SAC AND CENTERLINE OFFSETS MUST BE MODIFIED ACCORDINGLY. CUL-DE-SAC RETURN RADIIS SHALL BE 25' IN ALL CASES.

UTILITY	DIMENSION SYMBOL	LOCATION	UNDERGROUND DEPTH
GAS	A	7'	36"
WATER	B	11'	36"
SEWER F.M.	C	11'	36"
CABLE T.V.	D	10'	24"
TELEPHONE CONDUIT	E	9'	30"
TELEPHONE CABLE	F	7'	30"
RE-USE	G	5'	36"
ELECTRIC (UNDERGROUND)	H	2'	36"
ELECTRIC POLES *	I	TANGENT W/RIGHT-OF-WAY	N/A

AERIAL CABLES SHALL BE 18' ABOVE ℄ GRADE. CABLE T.V. & COMMUNICATION CABLES MAY BE PERMITTED AT 16', IF VALID EXTENUATING CIRCUMSTANCES CAN BE SHOWN.

* AND ASSOCIATED ABOVE GROUND EQUIPMENT
** MAINTAIN CLEAR ZONE REQUIREMENTS AS DEFINED BY THE FDOT GREENBOOK

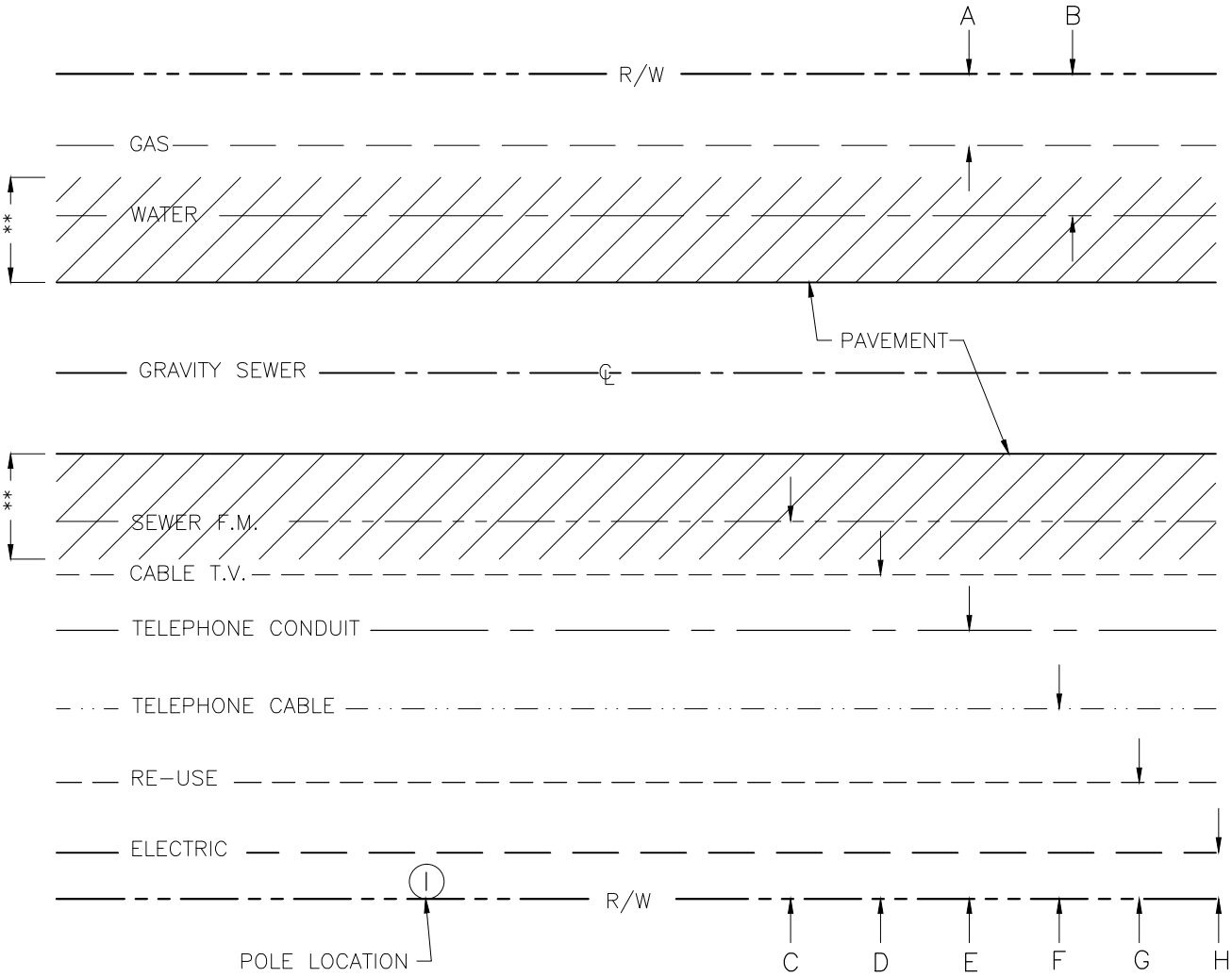

LEGEND
R/W RIGHT-OF-WAY
℄ CENTERLINE

UNLESS OTHERWISE APPROVED BY COUNTY ENGINEER

Marion County FLORIDA OFFICE OF THE COUNTY ENGINEER	MCBCC ADOPTED XX/XX/XX REVISION #	UTILITY POSITION IN RIGHT-OF-WAY	7 EN 006

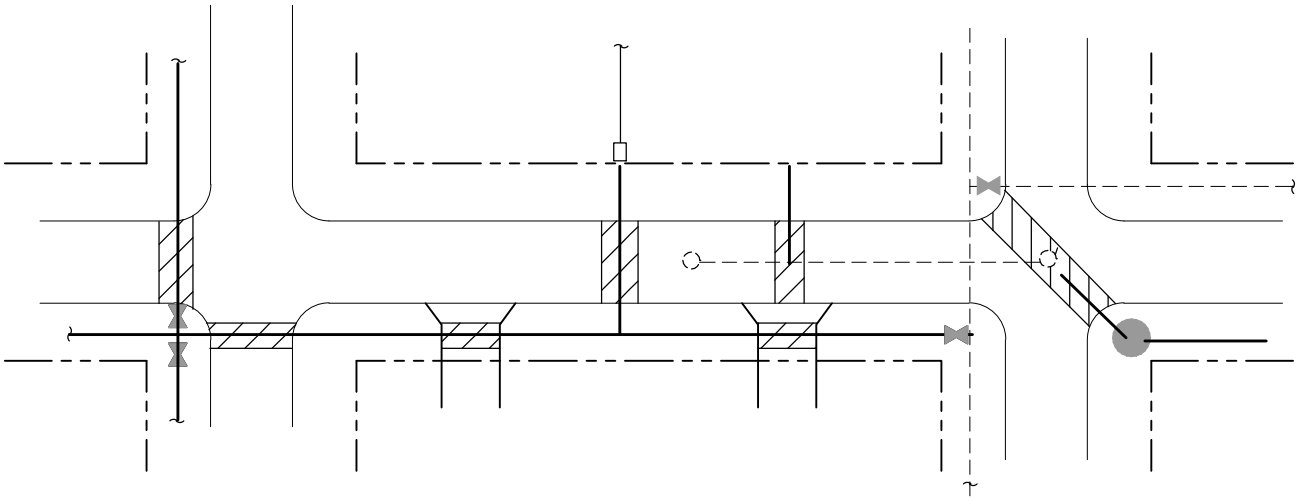

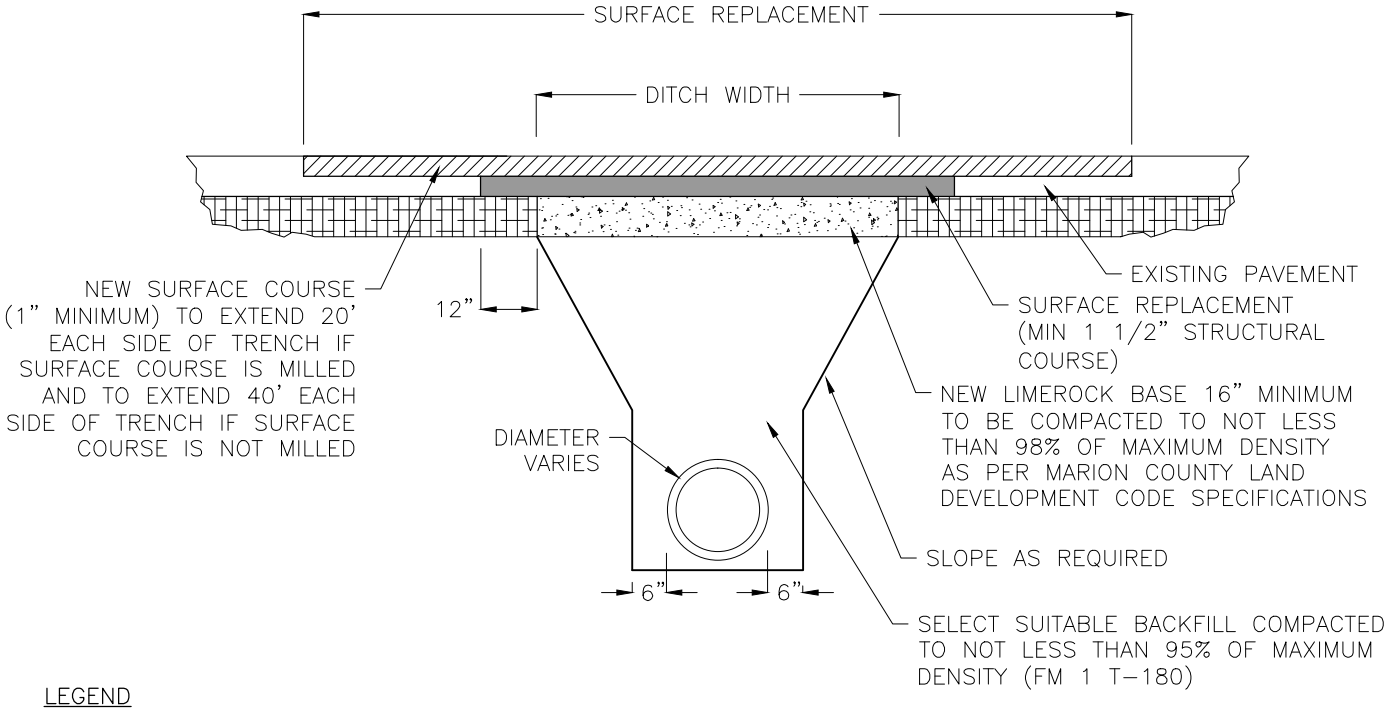

LEGEND

LIMITS OF TRENCH WIDTH PAVEMENT REPLACEMENT

NOTES:

1. UNLESS OTHERWISE SPECIFIED, MATERIALS AND METHODS OF OPERATION REQUIRED TO INSTALL NEW AND REPLACEMENT PAVEMENT SHALL BE IN ACCORDANCE WITH THE LATEST APPLICABLE REQUIREMENTS AND SPECIFICATIONS FOR ROADS CONTAINED IN THE MARION COUNTY LAND DEVELOPMENT CODE.
2. PAVEMENT SHALL BE REMOVED TO NEATLY SAWED STRAIGHT EDGES. SAWCUTS SHALL BE MADE TO MIN. DEPTH OF 1 1/2" (INCHES).
3. BACKFILL SHALL BE IN ACCORDANCE WITH SPECIFICATIONS OF MARION COUNTY LAND DEVELOPMENT CODE.
4. SURFACE TREATED PAVEMENT JOINTS SHALL BE LAPPED AND FEATHERED.
5. THE TYPE AND THICKNESS OF THE NEW SURFACE MATERIAL SHALL BE CONSISTENT WITH THAT OF THE EXISTING SURFACE BUT IN ALL CASES SHALL MEET THE MINIMUM STANDARDS ESTABLISHED BY THE PLANS AND SPECIFICATONS.
6. CONTRACTOR SHALL MAKE A CLEAN STRAIGHT CUT 12" BACK FROM EDGE OF NEW LIMEROCK BASE PRIOR TO PLACING NEW SURFACE COURSE (TYPICAL BOTH SIDES).

Marion County FLORIDA OFFICE OF THE COUNTY ENGINEER	MCBCC ADOPTED XX/XX/XX REVISION #	PAVEMENT CUT REPAIR	7 EN 007

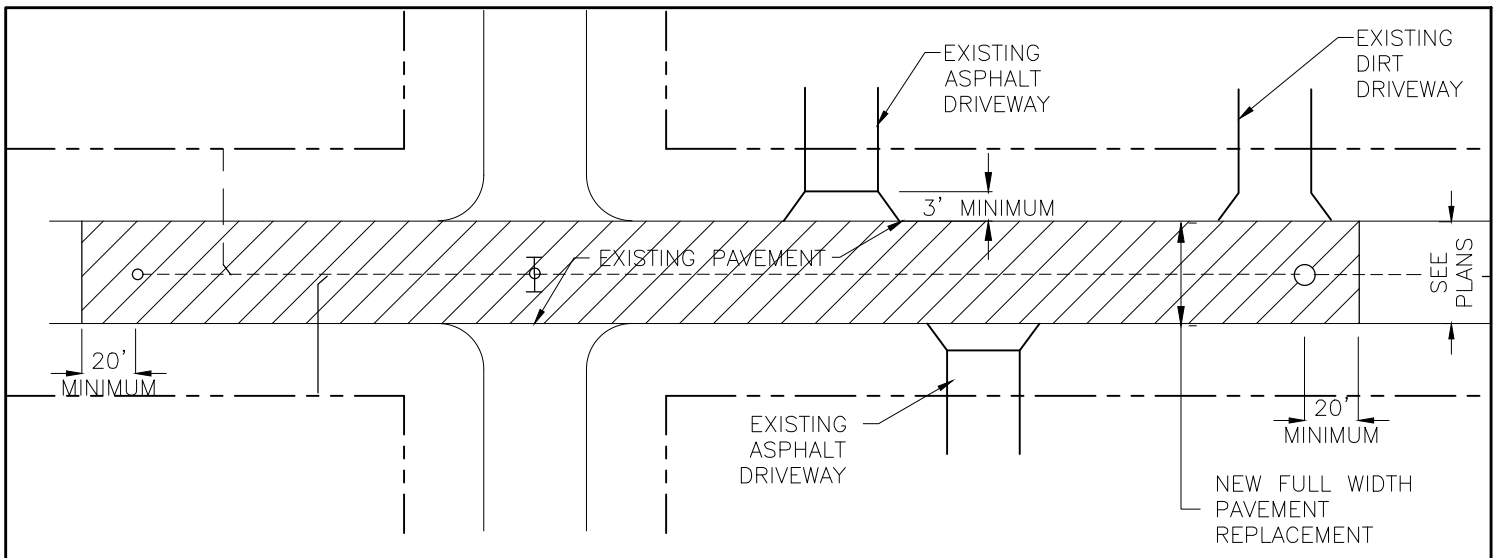

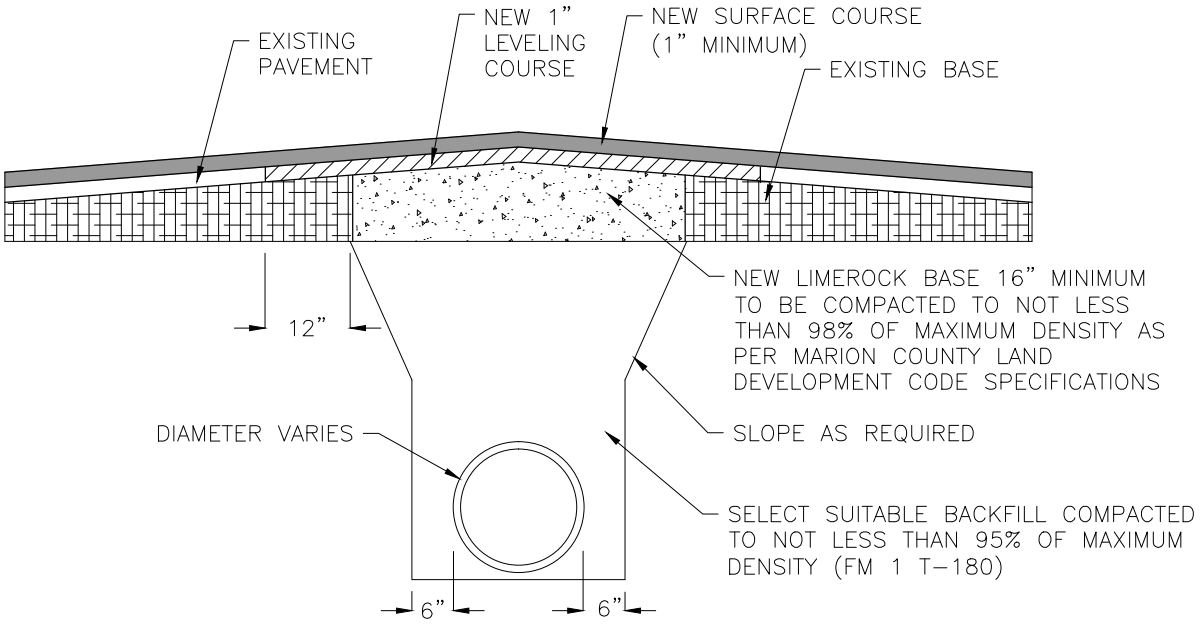

NOTES:

1. UNLESS OTHERWISE SPECIFIED, MATERIALS AND METHODS OF OPERATION REQUIRED TO INSTALL NEW AND REPLACEMENT PAVEMENT SHALL BE IN ACCORDANCE WITH THE LATEST APPLICABLE REQUIREMENTS AND SPECIFICATIONS FOR ROADS CONTAINED IN THE MARION COUNTY LAND DEVELOPMENT CODE.
2. BACKFILL MATERIAL ABOVE ONE FOOT OVER TOP OF PIPE SHALL BE PLACED IN LAYERS NOT TO EXCEED 8" AND COMPACTED TO 95% OF MAXIMUM DENSITY AT +/- 2% OF OPTIMUM MOISTURE CONTENT AS DETERMINED BY LABORATORY STANDARD PROCTOR TEST (AASHTO T-180).
3. TYPICAL SECTION SHALL BE CONSISTENT WITH AND GOVERNED BY EXISTING ROADWAY SECTION WITH MINIMUM ROADWAY REQUIREMENT TO BE AS SHOWN.
4. ALL EXISTING DRIVEWAY AND ROADWAYS SHALL HAVE PAVEMENT RETURNS PAVED DURING THE ROAD PAVING OPERATION.
5. IF IN THE OPINION OF THE ENGINEER, THE EXISTING ROADWAY IS DAMAGED TO THE EXTENT THAT THE EXISTING PAVEMENT SHOULD BE REMOVED OR IF THE ENTIRE PAVEMENT IS REMOVED DURING PIPELINE INSTALLATION, THE STABILIZED SUBGRADE AND LIMEROCK BASE SHALL BE CONSTRUCTED AS DESCRIBED ABOVE. THE BASE SHALL THEN BE PRIMED AND A NEW SURFACE COURSE 1" THICK, PLACED.
6. CONTRACTOR SHALL MAKE A CLEAN STRAIGHT CUT 6" BACK FROM EDGE OF NEW LIMEROCK BASE PRIOR TO PLACING NEW SURFACE COURSE (TYPICAL BOTH SIDES).

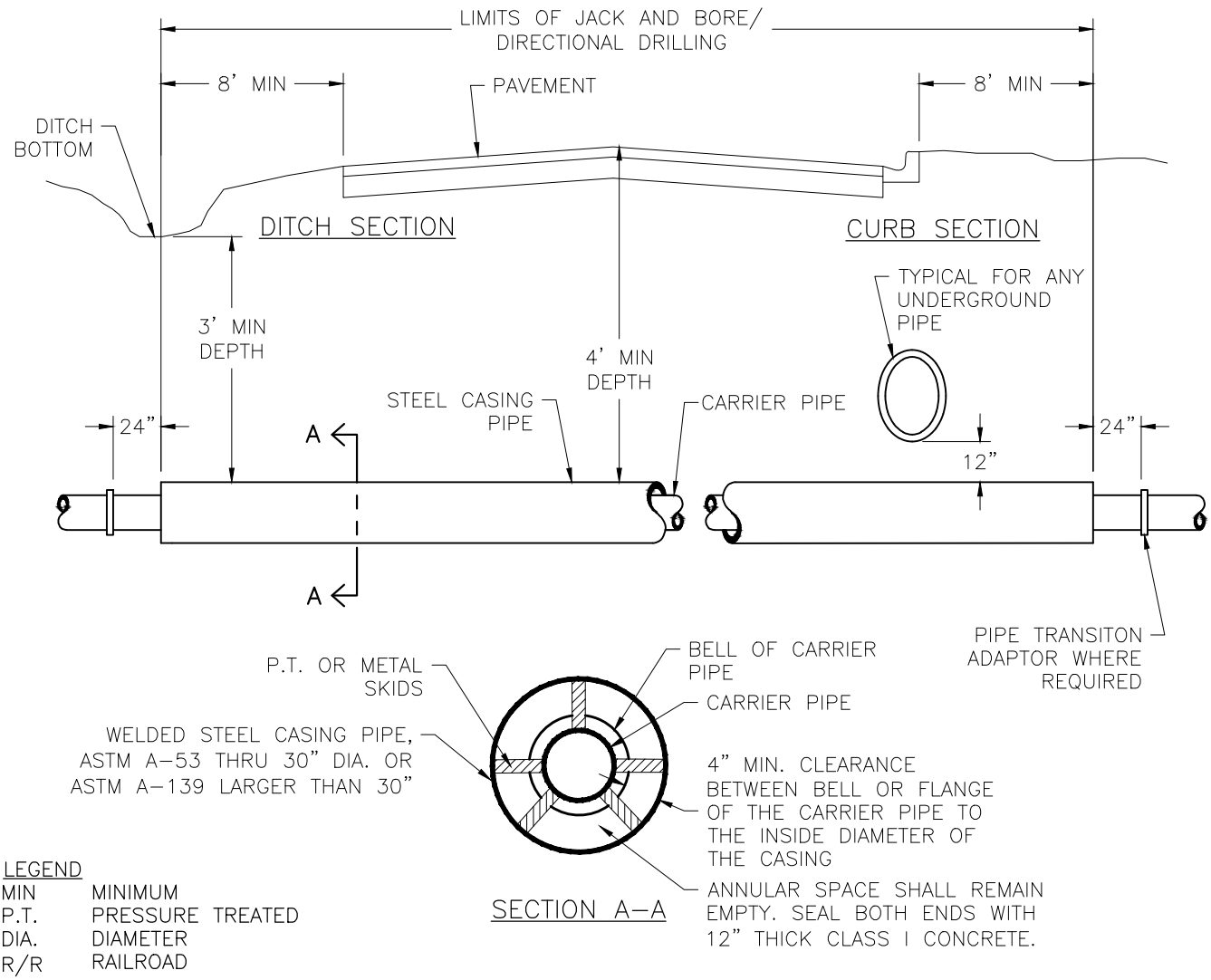

LEGEND

MIN	MINIMUM
P.T.	PRESSURE TREATED
DIA.	DIAMETER
R/R	RAILROAD

NOTES:

1. JACK AND BORE METHOD OR DIRECTIONAL DRILLING MAY BE USED FOR ANY CROSSING INVOLVING LARGER THAN 4" DIAMETER PIPE. CROSSINGS INVOLVING 4" OR LESS DIAMETER PIPE MAY BE DONE USING MISSILE METHOD OR DIRECTIONAL DRILLING FOLLOWING MANUFACTURER'S PROCEDURES. IN ALL CASES A PERMIT MUST BE ISSUED BY THE OFFICE OF THE COUNTY ENGINEER PRIOR TO THE WORK BEING PERFORMED, AND A COUNTY INSPECTOR SHALL BE ON SITE WHILE SAID WORK IS BEING PERFORMED.
2. ROTATION OF CARRIER PIPE INSIDE THE CASING PIPE WILL NOT BE PERMITTED. MECHANICAL OR FLANGED JOINT PIPE SHALL BE USED TO HELP PREVENT SUCH ROTATION.
3. ALL REQUIREMENTS OF FDOT AS SPECIFIED IN THE FDOT "UTILITY ACCOMMODATION GUIDE" SHALL BE ADHERED TO WHEN CROSSING HIGHWAYS. THE MORE STRINGENT REQUIREMENTS BETWEEN THE FDOT AND MARION COUNTY SHALL GOVERN IN ALL CASES OF CONFLICT.
4. THE INSIDE DIAMETER OF THE CASING SHALL BE A MINIMUM OF 4" GREATER THAN THE OUTSIDE DIAMETER OF THE CARRIER PIPE BELL OR COUPLING.
5. IN ADDITION TO THE SUPPORT ARRANGEMENT OF TIMBER OR METAL SKIDS, THE CONTRACTOR SHALL PROVIDE 4' LONG SKIDS FOR EACH LENGTH OF CARRIER PIPE AT THE SPRING LINE AND ON TOP ADJACENT TO THE BELL END OF THE PIPE DESIGNED TO PREVENT LATERAL OR VERTICAL REPLACEMENT.
6. THE CONTRACTOR SHALL SUBMIT SHOP DRAWINGS OF CASING OR TUNNEL LINER PIPE INSTALLATION FOR THE ENGINEER'S APPROVAL PRIOR TO FABRICATION OF PIPING, CASING, AND APPURTENANCES.
7. ALL REQUIREMENTS OF THE RAILROAD AS SPECIFIED BY THE AMERICAN RAILWAY ENGINEERING ASSOCIATION AND THE RAILROAD COMPANY SHALL BE ADHERED TO WHEN CROSSING RAILROADS. THE MORE STRINGENT REQUIREMENTS BETWEEN THE R/R AND MARION COUNTY SHALL GOVERN IN ALL CASES OF CONFLICT.

TYPICAL SECTION NOTES

1. RURAL ROADWAY SECTIONS–RURAL ROADWAY SECTIONS ARE TYPICALLY CHARACTERIZED BY OPEN DRAINAGE SYSTEMS AND HAVE LIMITED CURB AND GUTTER (MOST COMMONLY AT INTERSECTIONS). WIDENED SHOULDERS DO OCCUR, BUT ARE NOT DESIGNATED AS BIKE LANES, AND SIDEWALKS ARE USUALLY NOT INCLUDED. COORDINATION OF PUBLIC UTILITIES IS REQUIRED, BUT IS NOT GENERALLY A CRITICAL DESIGN ELEMENT AS RIGHT–OF–WAY SPACE IS NOT ENCUMBERED BY SIDEWALKS OR HEAVY COMMERCIAL OR RESIDENTIAL USES.

2. SEMI–URBAN ROADWAY SECTIONS–TYPICALLY OCCUR IN TRANSITIONAL AREAS WHICH ARE NOT FULLY DEVELOPED AND CONSIDERED AS 'URBAN'. A SEMI–URBAN ROADWAY TYPICALLY HAS A CURB AND GUTTER MEDIAN WITH AN UNCURBED OUTSIDE LANE, ALLOWING FOR AN OPEN DRAINAGE SYSTEM. ADEQUATE RIGHT–OF–WAY PLANNING SHOULD INCORPORATE AREAS FOR FUTURE PEDESTRIAN AND BIKE TRAVEL. CONSIDERATION FOR PUBLIC UTILITY LOCATIONS IS A CRITICAL ELEMENT AS THESE AREAS ARE ANTICIPATED TO BECOME 'URBAN'.

3. URBAN ROADWAY SECTIONS–TYPICALLY CHARACTERIZED BY CURB AND GUTTER ON BOTH THE INSIDE AND OUTSIDE LANES AND WITH CLOSED (PIPES) DRAINAGE SYSTEMS USED FOR MANAGEMENT OF STORMWATER RUNOFF. URBAN SECTIONS MAY ALSO INCLUDE SIDEWALKS AND BIKE LANES FOR PEDESTRIANS AND OTHER USERS. CONSIDERATION OF PUBLIC UTILITIES IS A CRITICAL ELEMENT IN DEVELOPING URBAN ROADWAY SECTIONS AS THESE AREAS ARE TYPICALLY INTENSE IN POPULATION AND COMMERCIAL ACTIVITIES.

4. ARTERIAL ROADWAY SECTIONS–THESE ROUTES PROVIDE SERVICE WHICH IS RELATIVELY CONTINUOUS AND OF RELATIVELY HIGH TRAFFIC VOLUME, LONG AVERAGE TRIP LENGTH, HIGH OPERATION SPEED, AND HIGH MOBILITY IMPORTANCE.

5. COLLECTOR ROADWAY SECTIONS–ROUTES THAT PROVIDE SERVICE WHICH IS OF RELATIVELY MODERATE AVERAGE TRAFFIC VOLUME, MODERATELY AVERAGE TRIP LENGTH, AND MODERATELY AVERAGE OPERATING SPEED. THIS ROUTE ALSO COLLECTS AND DISTRIBUTES TRAFFIC BETWEEN LOCAL ROADS OR ARTERIAL ROADS AND SERVES AS A LINKAGE BETWEEN LAND ACCESS AND MOBILITY NEEDS.

6. MAJOR LOCAL ROADWAY SECTIONS–(WITHIN LARGE SUBDIVISIONS OR RESIDENTIAL AREAS) ARE ROUTES THAT CONNECT NEIGHBORHOODS WITH THE ARTERIAL AND COLLECTOR ROAD NETWORK AND PROVIDE INTERCONNECTION BETWEEN NEIGHBORHOODS. MAJOR LOCAL ROADS (IN RURAL AREAS) ARE ROUTES THAT CONNECT SMALLER LOCAL ROADS WITH THE ARTERIAL AND COLLECTOR ROAD NETWORK.

7. MINOR LOCAL ROADWAY SECTIONS–INCLUDES ALL ROADS OUTSIDE OF SUBDIVISIONS THAT ARE NOT CLASSIFIED AS ARTERIAL, COLLECTOR, OR MAJOR LOCAL.

8. SUBDIVISION LOCAL ROADWAY SECTIONS–STREETS LOCATED WITHIN SUBDIVISIONS OR NEIGHBORHOODS THAT PRIMARILY PROVIDE ACCESS TO ABUTTING PROPERTIES OR PROPERTIES ALONG INTERCONNECTED NEIGHBORHOOD STREETS. GENERALLY, THESE STREETS WILL INCLUDE CUL–DE–SACS, SHORT BLOCKS OF A GRID NETWORK, OR OTHER INTERCONNECTED NEIGHBORHOOD STREETS.

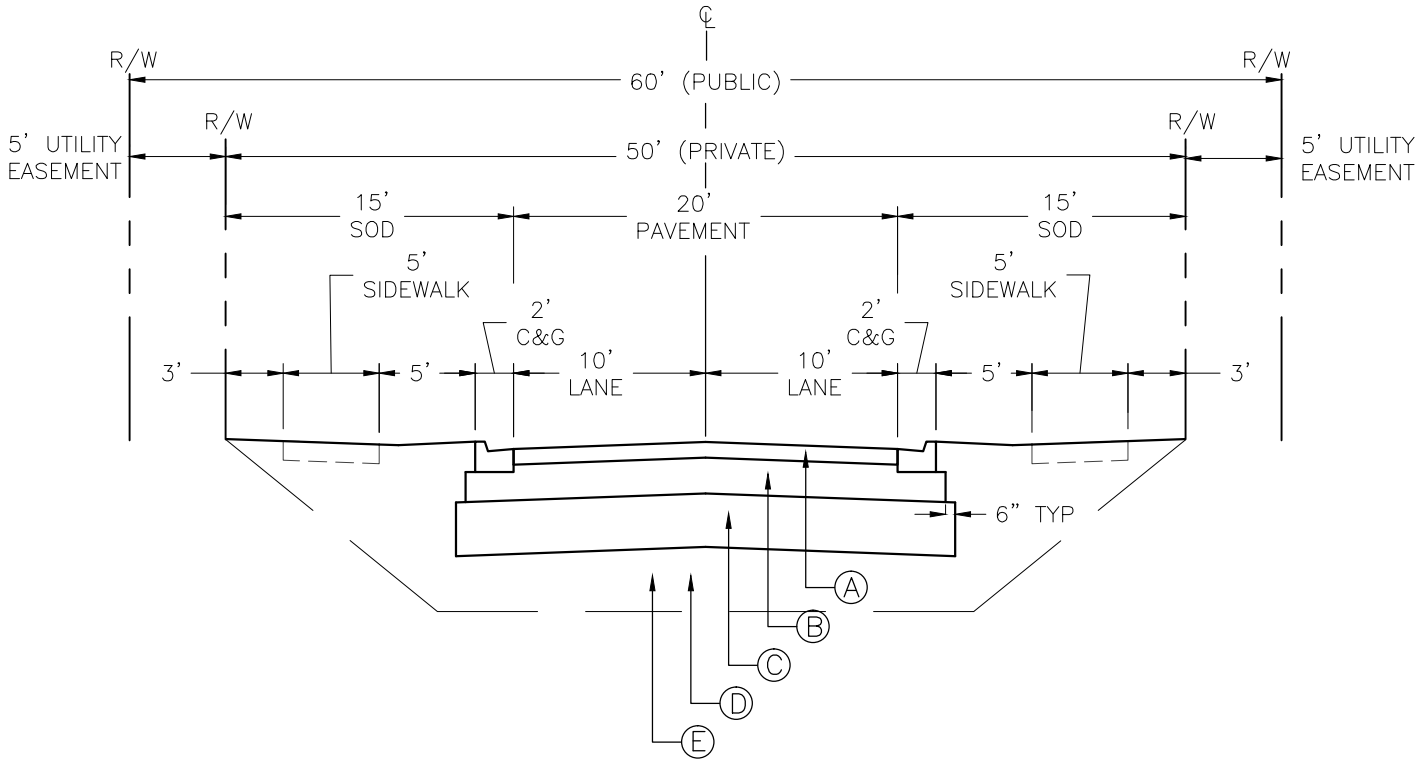

REFER TO ARTICLE 6 OF THIS CODE FOR SECTION WIDTHS AND THICKNESSES

(A) ASPHALTIC CONCRETE SURFACE COURSE

(B) LIMEROCK BASE COURSE, LBR 100

(C) STABILIZED SUBGRADE, LBR 40 (12" MINIMUM THICKNESS)

(D) EMBANKMENT MATERIAL WHEN REQUIRED BY UNSUITABLE MATERIAL EXCAVATION

(E) UNSUITABLE MATERIAL EXCAVATION IF REQUIRED

LEGEND

C&G	CURB AND GUTTER
℄	CENTERLINE
R/W	RIGHT-OF-WAY
TYP	TYPICAL

NOTES:

1. SIDEWALK, WHEN REQUIRED, SHALL BE CONSTRUCTED PER FDOT INDEX 310 AND SECTION 522 OF THE FDOT STANDARD SPECIFICATIONS.
2. EXISTING TREES MAY REMAIN IN THE R/W, PROVIDED THEY DO NOT CONFLICT WITH CLEAR ZONE, DRAINAGE, SIDEWALKS OR UTILITIES.
3. SEED & MULCH MAY BE ALLOWED IN CERTAIN AREAS OF THE R/W IF APPROVED.

Marion County FLORIDA OFFICE OF THE COUNTY ENGINEER	MCBCC ADOPTED XX/XX/XX REVISION #	2 LANE URBAN SUBDIVISION LOCAL TYPICAL SECTION	7 EN 011

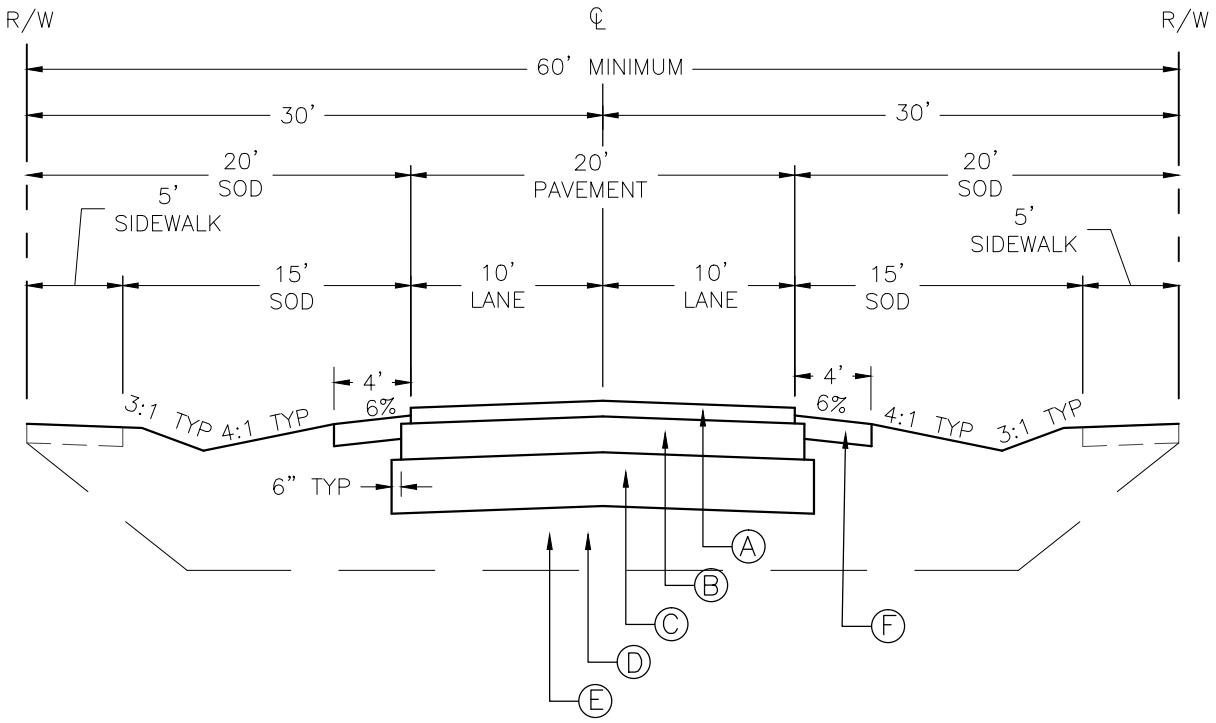

REFER TO ARTICLE 6 OF THIS CODE FOR SECTION WIDTHS AND THICKNESSES

(A) ASPHALTIC CONCRETE SURFACE COURSE

(B) LIMEROCK BASE COURSE, LBR 100

(C) STABILIZED SUBGRADE, LBR 40 (12" MINIMUM THICKNESS)

(D) EMBANKMENT MATERIAL WHEN REQUIRED BY UNSUITABLE MATERIAL EXCAVATION

(E) UNSUITABLE MATERIAL EXCAVATION IF REQUIRED

(F) STABILIZED SHOULDER, LBR 40 (6" MINIMUM THICKNESS)

LEGEND

℄	CENTERLINE
R/W	RIGHT-OF-WAY
TYP	TYPICAL

NOTES:

1. SIDEWALK, WHEN REQUIRED, SHALL BE CONSTRUCTED PER FDOT INDEX 310 AND SECTION 522 OF THE FDOT STANDARD SPECIFICATIONS.
2. EXISTING TREES MAY REMAIN IN THE R/W, PROVIDED THEY DO NOT CONFLICT WITH CLEAR ZONE, DRAINAGE, SIDEWALKS OR UTILITIES.
3. SEED & MULCH MAY BE ALLOWED IN CERTAIN AREAS OF THE R/W IF APPROVED.

Marion County FLORIDA OFFICE OF THE COUNTY ENGINEER	MCBCC ADOPTED XX/XX/XX REVISION #	2 LANE RURAL SUBDIVISION LOCAL TYPICAL SECTION	7 EN 012

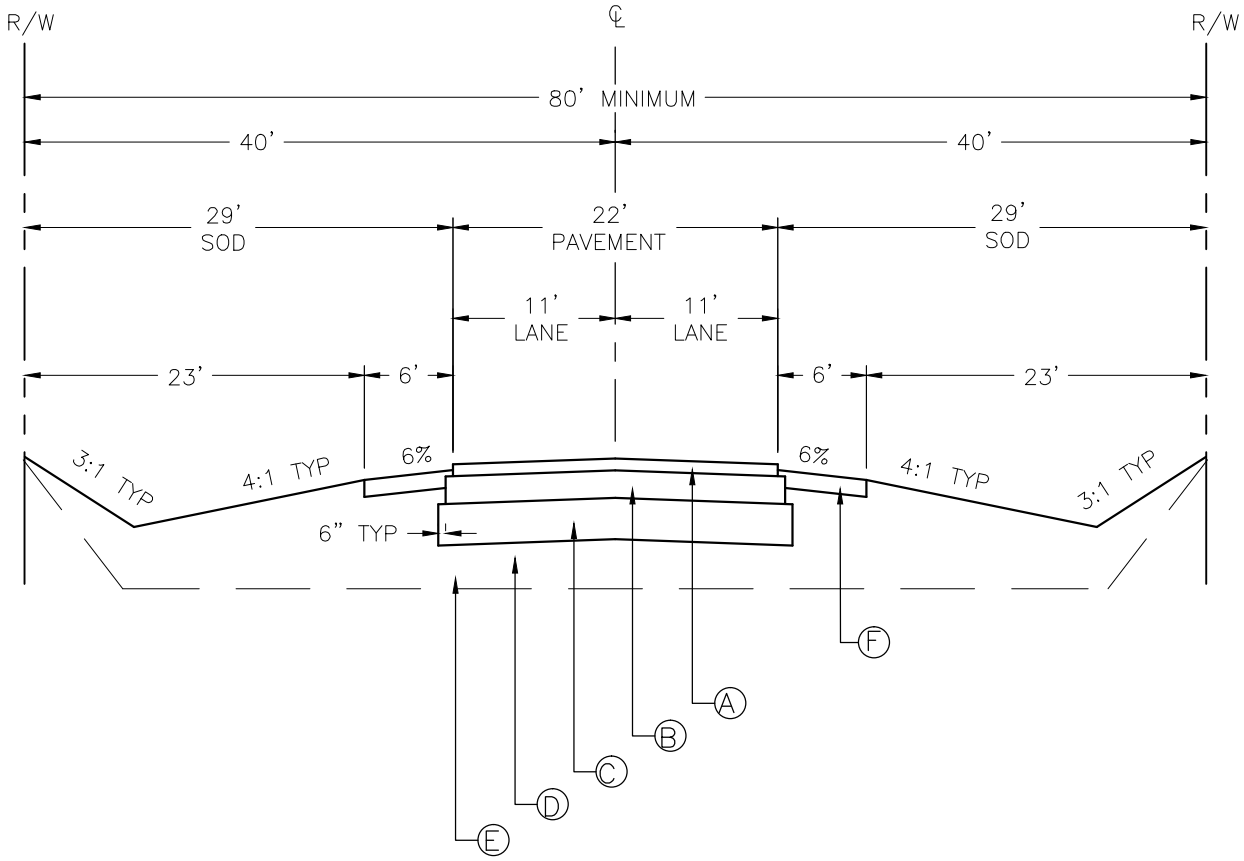

REFER TO ARTICLE 6 OF THIS CODE FOR SECTION WIDTHS AND THICKNESSES

Ⓐ ASPHALTIC CONCRETE SURFACE COURSE

Ⓑ LIMEROCK BASE COURSE, LBR 100

Ⓒ STABILIZED SUBGRADE, LBR 40 (12" MINIMUM THICKNESS)

Ⓓ EMBANKMENT MATERIAL WHEN REQUIRED BY UNSUITABLE MATERIAL EXCAVATION

Ⓔ UNSUITABLE MATERIAL EXCAVATION IF REQUIRED

Ⓕ STABILIZED SHOULDER, LBR 40 (6" MINIMUM THICKNESS)

LEGEND

℄	CENTERLINE
R/W	RIGHT-OF-WAY
TYP	TYPICAL

NOTES:

1. SIDEWALK, WHEN REQUIRED, SHALL BE CONSTRUCTED PER FDOT INDEX 310 AND SECTION 522 OF THE FDOT STANDARD SPECIFICATIONS.
2. EXISTING TREES MAY REMAIN IN THE R/W, PROVIDED THEY DO NOT CONFLICT WITH CLEAR ZONE, DRAINAGE, SIDEWALKS OR UTILITIES.
3. SEED & MULCH MAY BE ALLOWED IN CERTAIN AREAS OF THE R/W IF APPROVED.

Marion County FLORIDA OFFICE OF THE COUNTY ENGINEER	MCBCC ADOPTED XX/XX/XX REVISION #	2 LANE RURAL MINOR LOCAL TYPICAL SECTION	7 EN 013

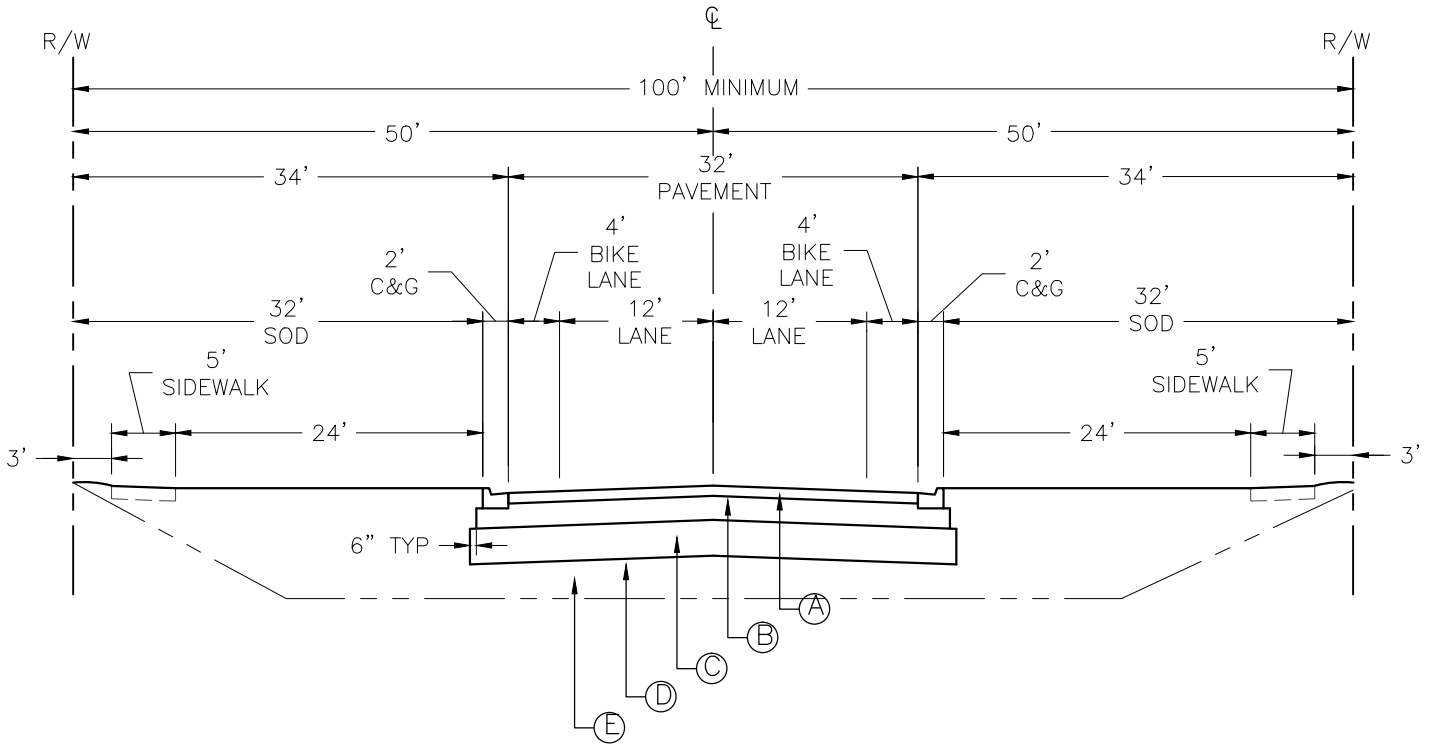

REFER TO ARTICLE 6 OF THIS CODE FOR SECTION WIDTHS AND THICKNESSES

Ⓐ ASPHALTIC CONCRETE SURFACE COURSE

Ⓑ LIMEROCK BASE COURSE, LBR 100

Ⓒ STABILIZED SUBGRADE, LBR 40 (12" MINIMUM THICKNESS)

Ⓓ EMBANKMENT MATERIAL WHEN REQUIRED BY UNSUITABLE MATERIAL EXCAVATION

Ⓔ UNSUITABLE MATERIAL EXCAVATION IF REQUIRED

LEGEND

C&G	CURB & GUTTER
℄	CENTERLINE
R/W	RIGHT-OF-WAY
TYP	TYPICAL

NOTES:

1. SIDEWALK, WHEN REQUIRED, SHALL BE CONSTRUCTED PER FDOT INDEX 310 AND SECTION 522 OF THE FDOT STANDARD SPECIFICATIONS.
2. EXISTING TREES MAY REMAIN IN THE R/W, PROVIDED THEY DO NOT CONFLICT WITH CLEAR ZONE, DRAINAGE, SIDEWALKS OR UTILITIES.
3. SEED & MULCH MAY BE ALLOWED IN CERTAIN AREAS OF THE R/W IF APPROVED.

Marion County FLORIDA OFFICE OF THE COUNTY ENGINEER	MCBCC ADOPTED XX/XX/XX REVISION #	2 LANE URBAN MAJOR LOCAL TYPICAL SECTION	7 EN 014

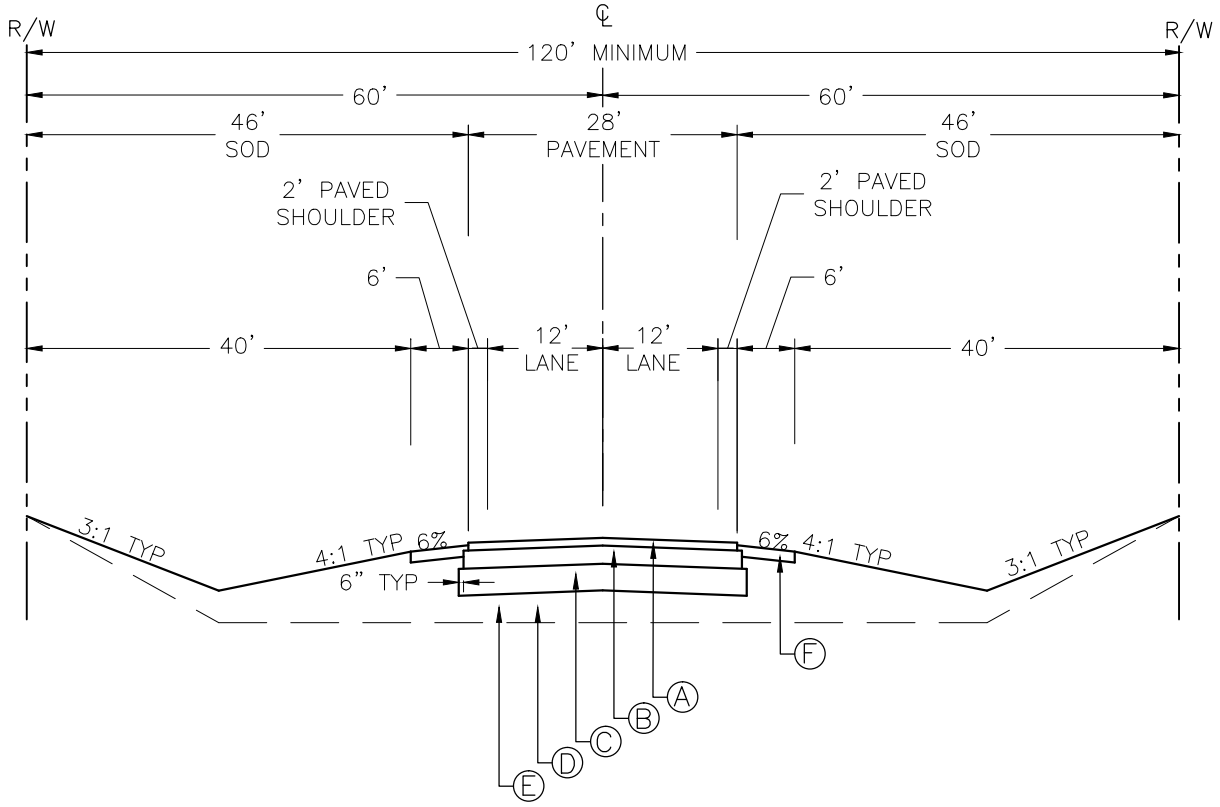

REFER TO ARTICLE 6 OF THIS CODE FOR SECTION WIDTHS AND THICKNESSES

Ⓐ ASPHALTIC CONCRETE SURFACE COURSE

Ⓑ LIMEROCK BASE COURSE, LBR 100

Ⓒ STABILIZED SUBGRADE, LBR 40 (12" MINIMUM THICKNESS)

Ⓓ EMBANKMENT MATERIAL WHEN REQUIRED BY UNSUITABLE MATERIAL EXCAVATION

Ⓔ UNSUITABLE MATERIAL EXCAVATION IF REQUIRED

Ⓕ STABILIZED SHOULDER, LBR 40 (6" MINIMUM THICKNESS)

LEGEND

℄	CENTERLINE
R/W	RIGHT-OF-WAY
TYP	TYPICAL

NOTES:

1. SIDEWALK, WHEN REQUIRED, SHALL BE CONSTRUCTED PER FDOT INDEX 310 AND SECTION 522 OF THE FDOT STANDARD SPECIFICATIONS.
2. EXISTING TREES MAY REMAIN IN THE R/W, PROVIDED THEY DO NOT CONFLICT WITH CLEAR ZONE, DRAINAGE, SIDEWALKS OR UTILITIES.
3. SEED & MULCH MAY BE ALLOWED IN CERTAIN AREAS OF THE R/W IF APPROVED.

Marion County FLORIDA OFFICE OF THE COUNTY ENGINEER	MCBCC ADOPTED XX/XX/XX REVISION #	2 LANE RURAL COLLECTOR/ARTERIAL TYPICAL SECTION	7 EN 015

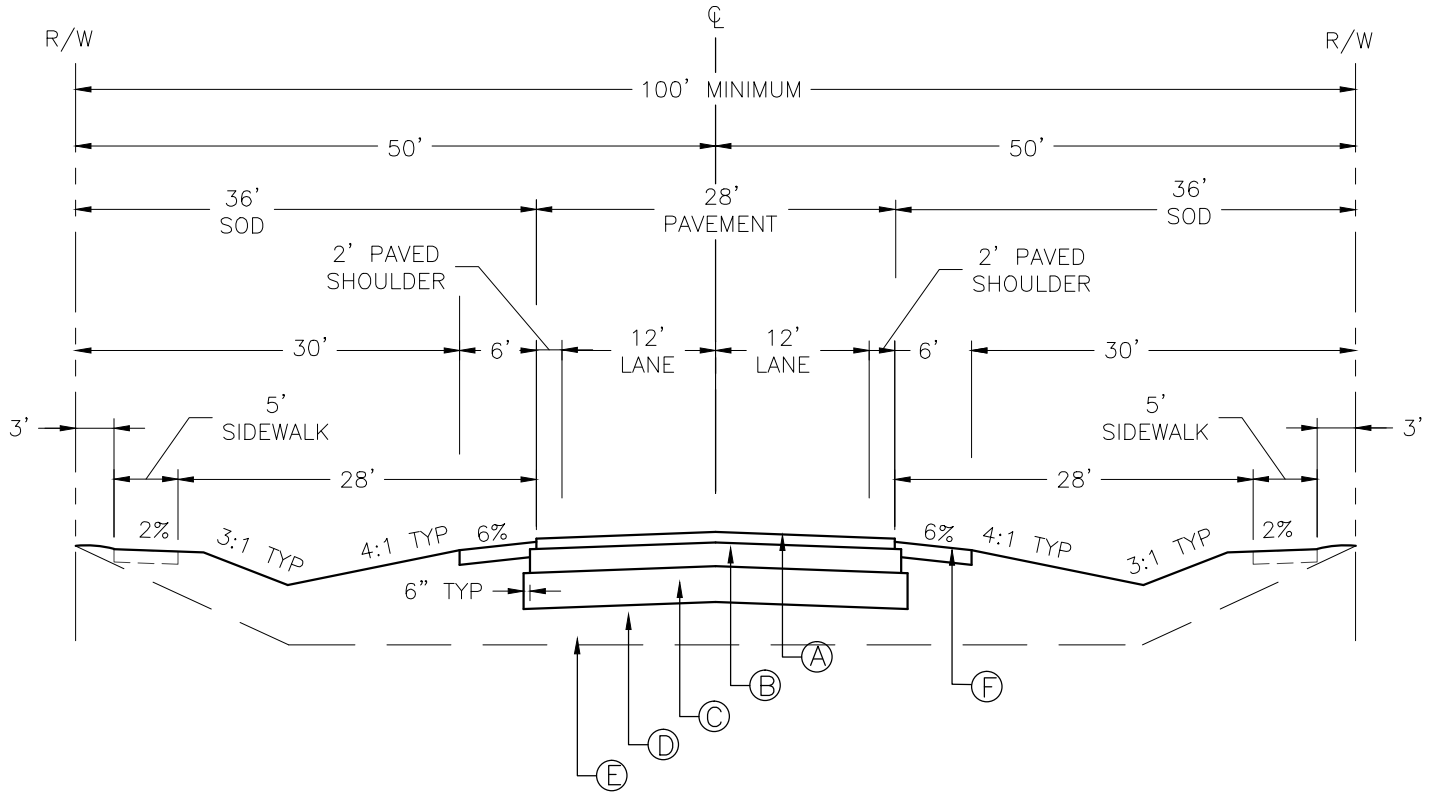

REFER TO ARTICLE 6 OF THIS CODE FOR SECTION WIDTHS AND THICKNESSES

Ⓐ ASPHALTIC CONCRETE SURFACE COURSE

Ⓑ LIMEROCK BASE COURSE, LBR 100

Ⓒ STABILIZED SUBGRADE, LBR 40 (12" MINIMUM THICKNESS)

Ⓓ EMBANKMENT MATERIAL WHEN REQUIRED BY UNSUITABLE MATERIAL EXCAVATION

Ⓔ UNSUITABLE MATERIAL EXCAVATION IF REQUIRED

Ⓕ STABILIZED SHOULDER, LBR 40 (6" MINIMUM THICKNESS)

LEGEND

℄	CENTERLINE
R/W	RIGHT-OF-WAY
TYP	TYPICAL

NOTES:

1. SIDEWALK, WHEN REQUIRED, SHALL BE CONSTRUCTED PER FDOT INDEX 310 AND SECTION 522 OF THE FDOT STANDARD SPECIFICATIONS.
2. EXISTING TREES MAY REMAIN IN THE R/W, PROVIDED THEY DO NOT CONFLICT WITH CLEAR ZONE, DRAINAGE, SIDEWALKS OR UTILITIES.
3. SEED & MULCH MAY BE ALLOWED IN CERTAIN AREAS OF THE R/W IF APPROVED.

Marion County FLORIDA OFFICE OF THE COUNTY ENGINEER	MCBCC ADOPTED XX/XX/XX REVISION #	2 LANE RURAL MAJOR LOCAL TYPICAL SECTION	7 EN 016

Marion County FLORIDA
OFFICE OF THE COUNTY ENGINEER

MCBCC ADOPTED
XX/XX/XX
REVISION #

2 LANE URBAN COLLECTOR/ARTERIAL TYPICAL SECTION

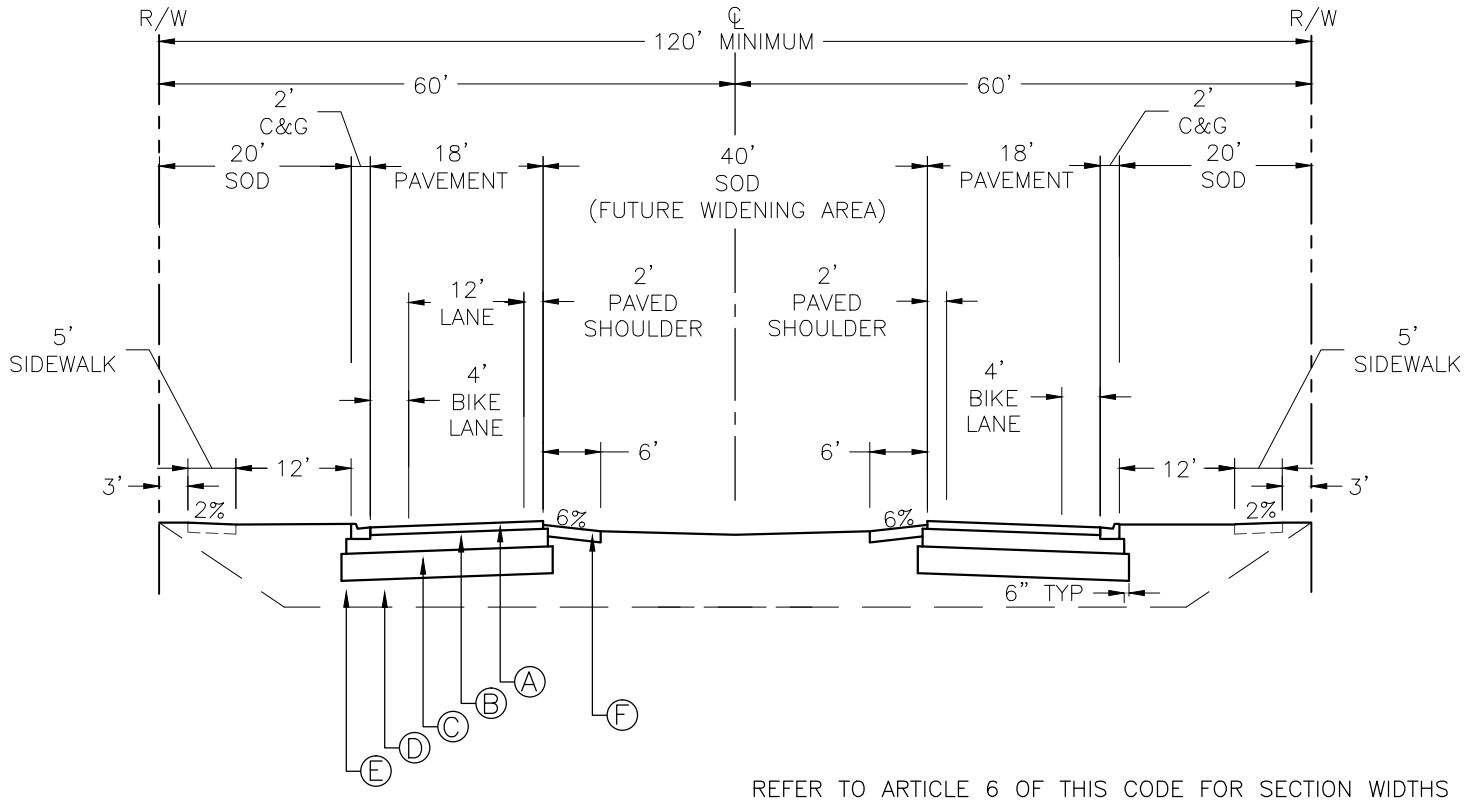

REFER TO ARTICLE 6 OF THIS CODE FOR SECTION WIDTHS AND THICKNESSES

Ⓐ ASPHALTIC CONCRETE SURFACE COURSE

Ⓑ LIMEROCK BASE COURSE, LBR 100

Ⓒ STABILIZED SUBGRADE, LBR 40 (12" MINIMUM THICKNESS)

Ⓓ EMBANKMENT MATERIAL WHEN REQUIRED BY UNSUITABLE MATERIAL EXCAVATION

Ⓔ UNSUITABLE MATERIAL EXCAVATION IF REQUIRED

Ⓕ STABILIZED SHOULDER, LBR 40 (6" MINIMUM THICKNESS)

LEGEND

C&G	CURB & GUTTER
℄	CENTERLINE
R/W	RIGHT-OF-WAY
TYP	TYPICAL

NOTES:

1. SIDEWALK, WHEN REQUIRED, SHALL BE CONSTRUCTED PER FDOT INDEX 310 AND SECTION 522 OF THE FDOT STANDARD SPECIFICATIONS.
2. EXISTING TREES MAY REMAIN IN THE R/W, PROVIDED THEY DO NOT CONFLICT WITH CLEAR ZONE, DRAINAGE, SIDEWALKS OR UTILITIES.
3. SEED & MULCH MAY BE ALLOWED IN CERTAIN AREAS OF THE R/W IF APPROVED.

Marion County FLORIDA
OFFICE OF THE COUNTY ENGINEER

MCBCC ADOPTED
XX/XX/XX
REVISION #

4 LANE URBAN COLLECTOR/ARTERIAL TYPICAL SECTION

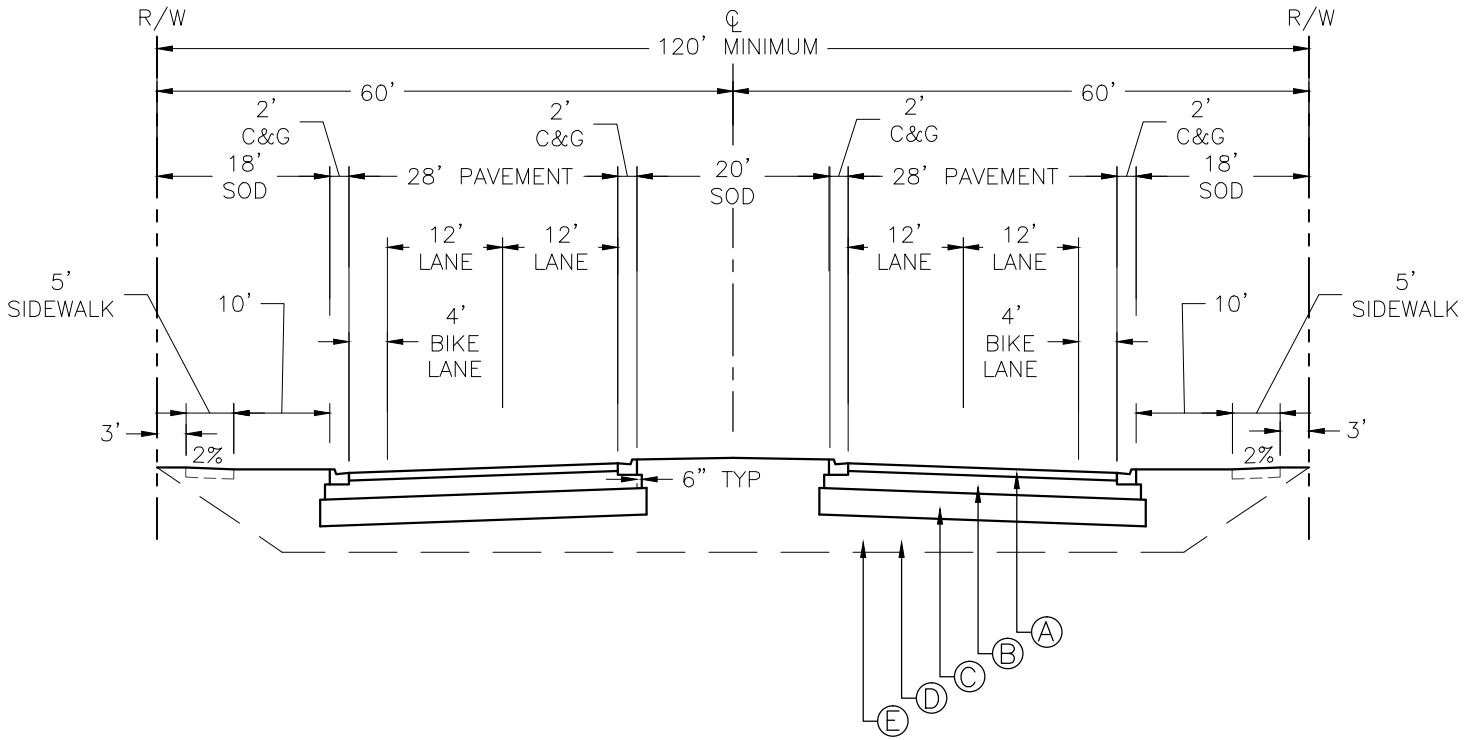

REFER TO ARTICLE 6 OF THIS CODE FOR SECTION WIDTHS AND THICKNESSES

Ⓐ ASPHALTIC CONCRETE SURFACE COURSE

Ⓑ LIMEROCK BASE COURSE, LBR 100

Ⓒ STABILIZED SUBGRADE, LBR 40 (12" MINIMUM THICKNESS)

Ⓓ EMBANKMENT MATERIAL WHEN REQUIRED BY UNSUITABLE MATERIAL EXCAVATION

Ⓔ UNSUITABLE MATERIAL EXCAVATION IF REQUIRED

LEGEND

C&G	CURB & GUTTER
℄	CENTERLINE
R/W	RIGHT-OF-WAY
TYP	TYPICAL

NOTES:

1. SIDEWALK, WHEN REQUIRED, SHALL BE CONSTRUCTED PER FDOT INDEX 310 AND SECTION 522 OF THE FDOT STANDARD SPECIFICATIONS.
2. EXISTING TREES MAY REMAIN IN THE R/W, PROVIDED THEY DO NOT CONFLICT WITH CLEAR ZONE, DRAINAGE, SIDEWALKS OR UTILITIES.
3. SEED & MULCH MAY BE ALLOWED IN CERTAIN AREAS OF THE R/W IF APPROVED.

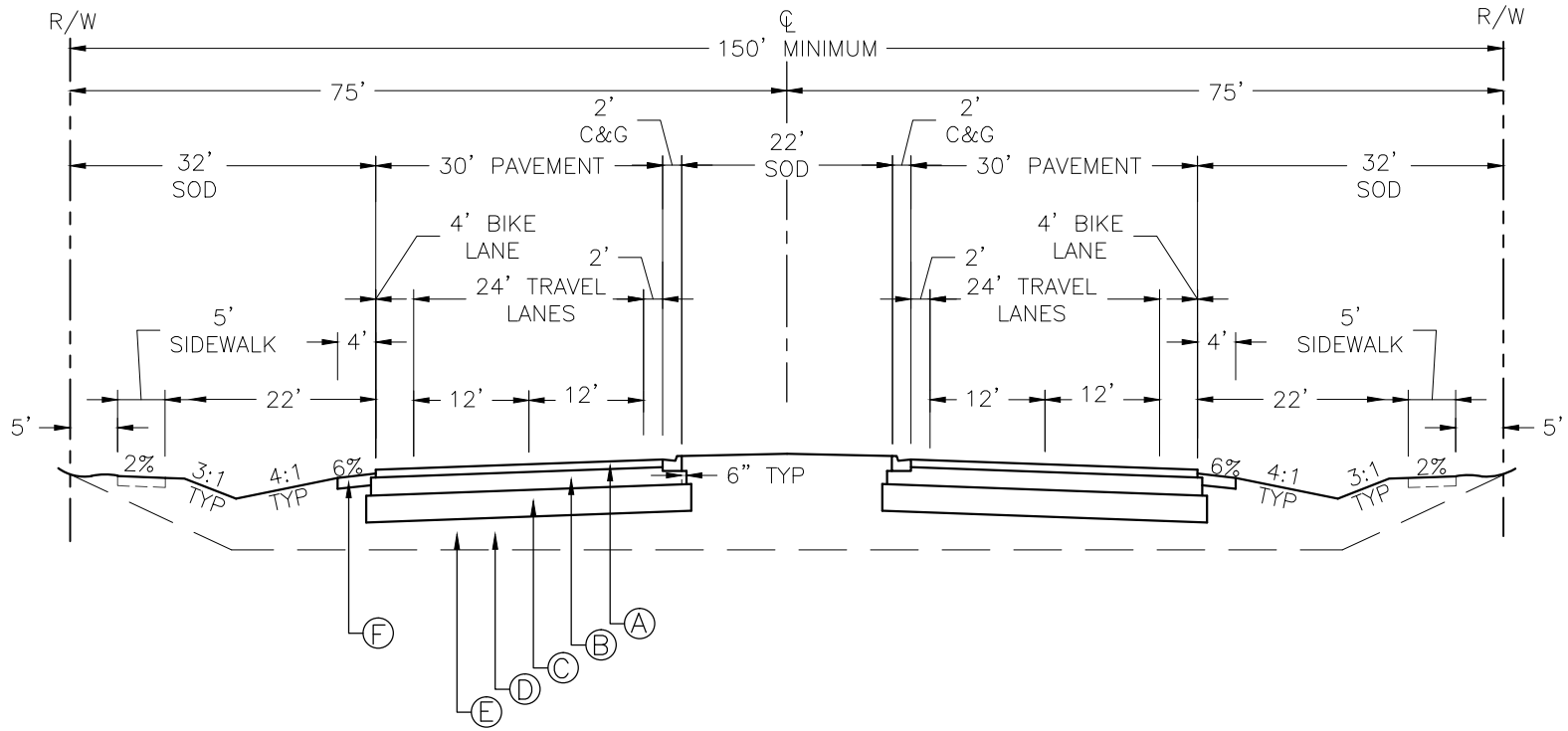

REFER TO ARTICLE 6 OF THIS CODE FOR SECTION WIDTHS AND THICKNESSES

Ⓐ ASPHALTIC CONCRETE SURFACE COURSE

Ⓑ LIMEROCK BASE COURSE, LBR 100

Ⓒ STABILIZED SUBGRADE, LBR 40 (12" MINIMUM THICKNESS)

Ⓓ EMBANKMENT MATERIAL WHEN REQUIRED BY UNSUITABLE MATERIAL EXCAVATION

Ⓔ UNSUITABLE MATERIAL EXCAVATION IF REQUIRED

Ⓕ STABILIZED SHOULDER, LBR 40 (6" MINIMUM THICKNESS)

LEGEND

C&G	CURB & GUTTER
℄	CENTERLINE
R/W	RIGHT-OF-WAY
TYP	TYPICAL

NOTES:

1. SIDEWALK, WHEN REQUIRED, SHALL BE CONSTRUCTED PER FDOT INDEX 310 AND SECTION 522 OF THE FDOT STANDARD SPECIFICATIONS.
2. EXISTING TREES MAY REMAIN IN THE R/W, PROVIDED THEY DO NOT CONFLICT WITH CLEAR ZONE, DRAINAGE, SIDEWALKS OR UTILITIES.
3. SEED & MULCH MAY BE ALLOWED IN CERTAIN AREAS OF THE R/W IF APPROVED.

Marion County FLORIDA
OFFICE OF THE COUNTY ENGINEER

MCBCC ADOPTED
XX/XX/XX
REVISION #

4 LANE SEMI-URBAN COLLECTOR/ARTERIAL TYPICAL SECTION

7
EN 019

Marion County FLORIDA
OFFICE OF THE COUNTY ENGINEER

MCBCC ADOPTED
XX/XX/XX
REVISION #

2 LANE RURAL COLLECTOR/ARTERIAL TYPICAL SECTION

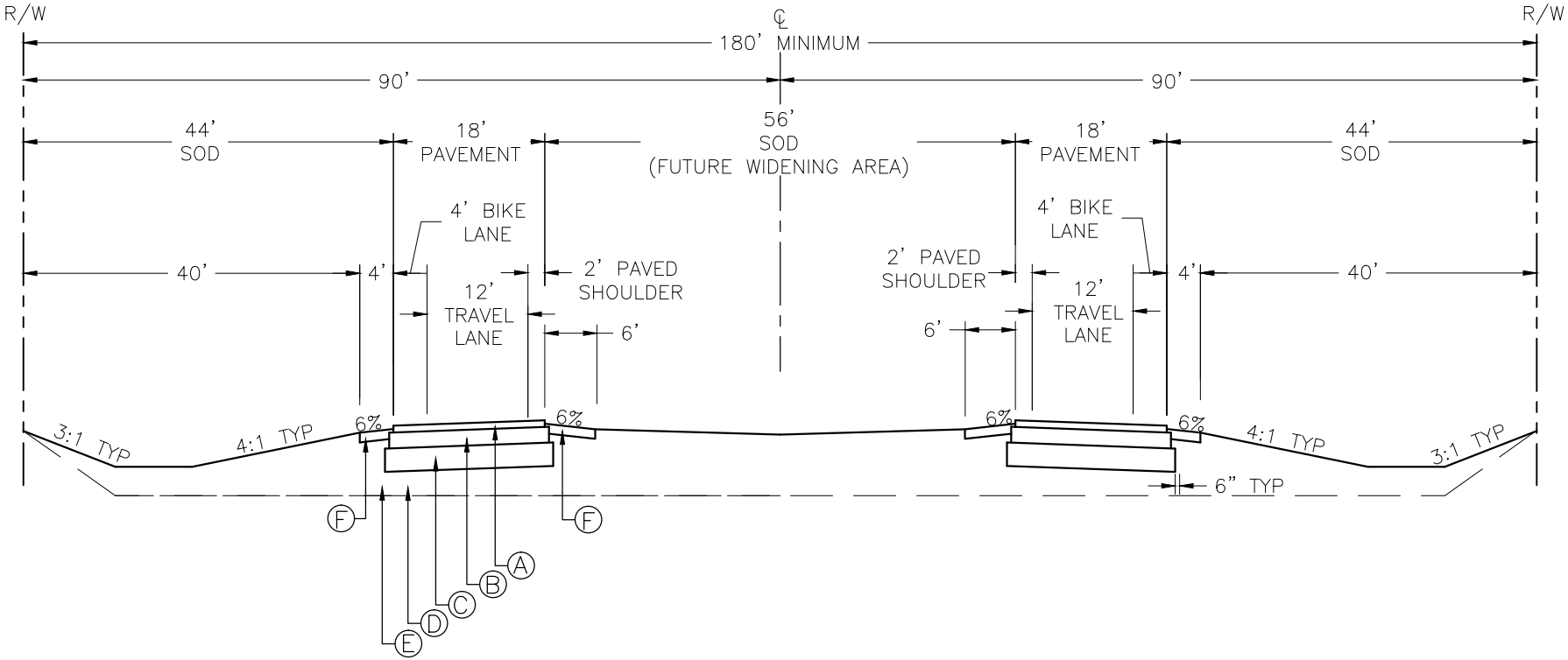

REFER TO ARTICLE 6 OF THIS CODE FOR SECTION WIDTHS AND THICKNESSES

Ⓐ ASPHALTIC CONCRETE SURFACE COURSE

Ⓑ LIMEROCK BASE COURSE, LBR 100

Ⓒ STABILIZED SUBGRADE, LBR 40 (12" MINIMUM THICKNESS)

Ⓓ EMBANKMENT MATERIAL WHEN REQUIRED BY UNSUITABLE MATERIAL EXCAVATION

Ⓔ UNSUITABLE MATERIAL EXCAVATION IF REQUIRED

Ⓕ STABILIZED SHOULDER, LBR 40 (6" MINIMUM THICKNESS)

LEGEND

℄	CENTERLINE
R/W	RIGHT-OF-WAY
TYP	TYPICAL

NOTES:

1. SIDEWALK, WHEN REQUIRED, SHALL BE CONSTRUCTED PER FDOT INDEX 310 AND SECTION 522 OF THE FDOT STANDARD SPECIFICATIONS.
2. EXISTING TREES MAY REMAIN IN THE R/W, PROVIDED THEY DO NOT CONFLICT WITH CLEAR ZONE, DRAINAGE, SIDEWALKS OR UTILITIES.
3. SEED & MULCH MAY BE ALLOWED IN CERTAIN AREAS OF THE R/W IF APPROVED.

Marion County FLORIDA
OFFICE OF THE COUNTY ENGINEER

MCBCC ADOPTED
XX/XX/XX
REVISION #

4 LANE RURAL COLLECTOR/ARTERIAL TYPICAL SECTION

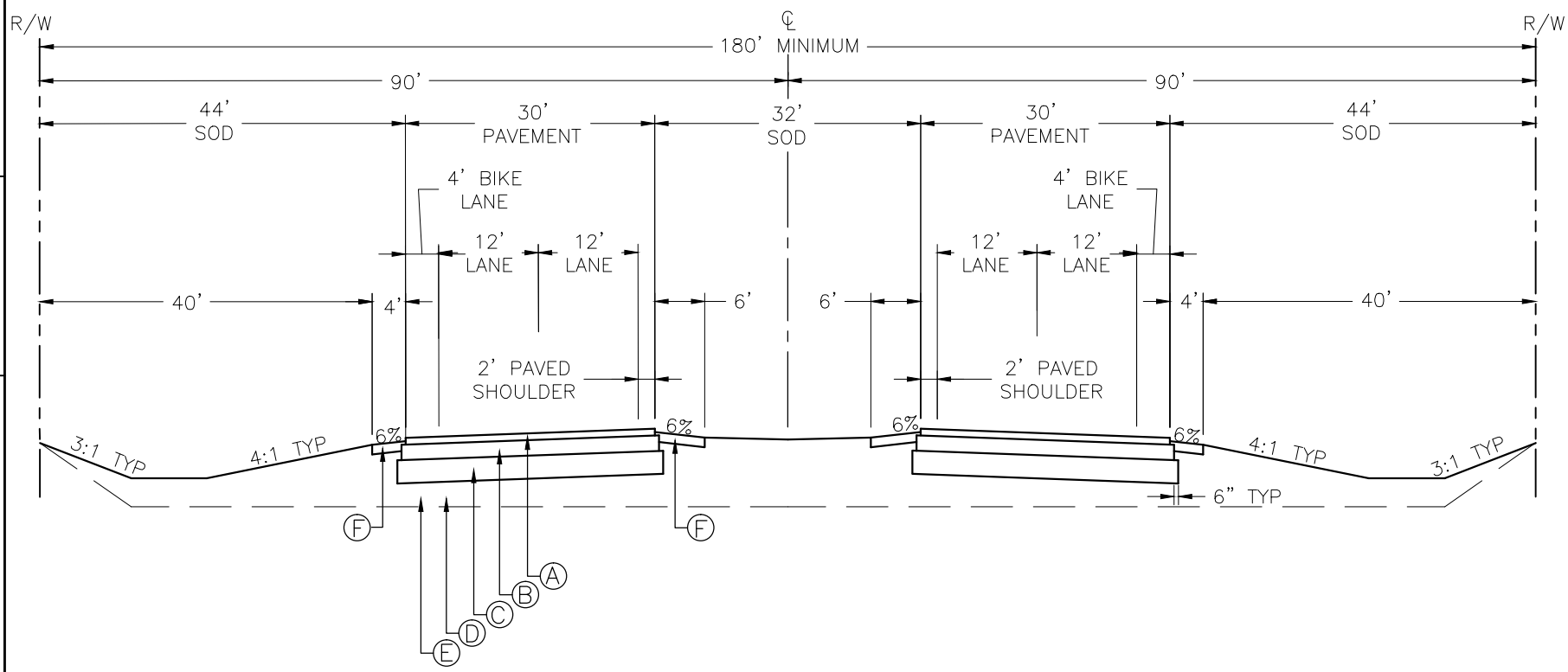

REFER TO ARTICLE 6 OF THIS CODE FOR SECTION WIDTHS AND THICKNESSES

Ⓐ ASPHALTIC CONCRETE SURFACE COURSE

Ⓑ LIMEROCK BASE COURSE, LBR 100

Ⓒ STABILIZED SUBGRADE, LBR 40 (12" MINIMUM THICKNESS)

Ⓓ EMBANKMENT MATERIAL WHEN REQUIRED BY UNSUITABLE MATERIAL EXCAVATION

Ⓔ UNSUITABLE MATERIAL EXCAVATION IF REQUIRED

Ⓕ STABILIZED SHOULDER, LBR 40 (6" MINIMUM THICKNESS)

LEGEND

℄	CENTERLINE
R/W	RIGHT-OF-WAY
TYP	TYPICAL

NOTES:

1. SIDEWALK, WHEN REQUIRED, SHALL BE CONSTRUCTED PER FDOT INDEX 310 AND SECTION 522 OF THE FDOT STANDARD SPECIFICATIONS.
2. EXISTING TREES MAY REMAIN IN THE R/W, PROVIDED THEY DO NOT CONFLICT WITH CLEAR ZONE, DRAINAGE, SIDEWALKS OR UTILITIES.
3. SEED & MULCH MAY BE ALLOWED IN CERTAIN AREAS OF THE R/W IF APPROVED.

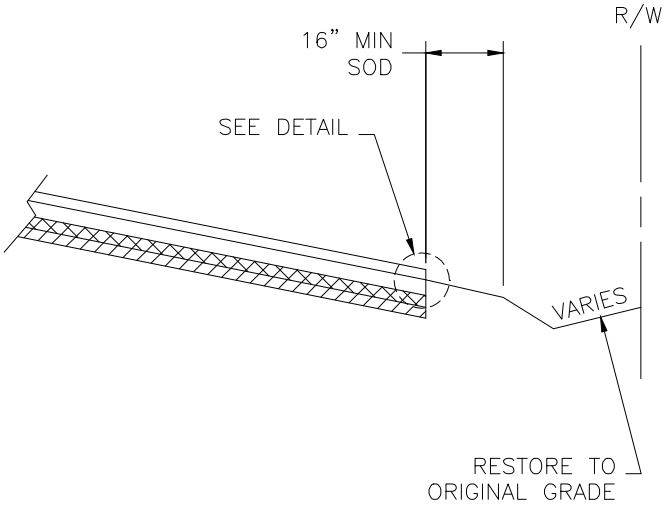

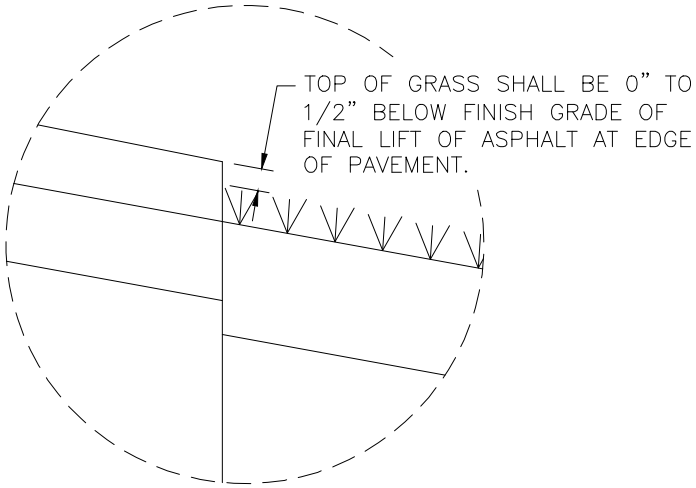

LEGEND

℄	CENTERLINE
R/W	RIGHT-OF-WAY
MIN	MINIMUM

NOTE:
SHOULDERS SHALL BE MAINTAINED DURING CONSTRUCTION AND UP TO FINAL ACCEPTANCE OF PROJECT, INCLUDING ANY REGRADING, REPAIR OF DROPOFFS, REPLACEMENT OF SOD AND SEED AND MULCH.

Marion County FLORIDA OFFICE OF THE COUNTY ENGINEER	MCBCC ADOPTED XX/XX/XX REVISION #	SHOULDER SODDING	7 EN 022

MAILBOX INSTALLATION SHALL COMPLY WITH AASHTO (A GUIDE FOR ERECTING MAILBOXES ON HIGHWAYS – LATEST REVISION) AND SHALL HAVE BREAKAWAY SUPPORTS

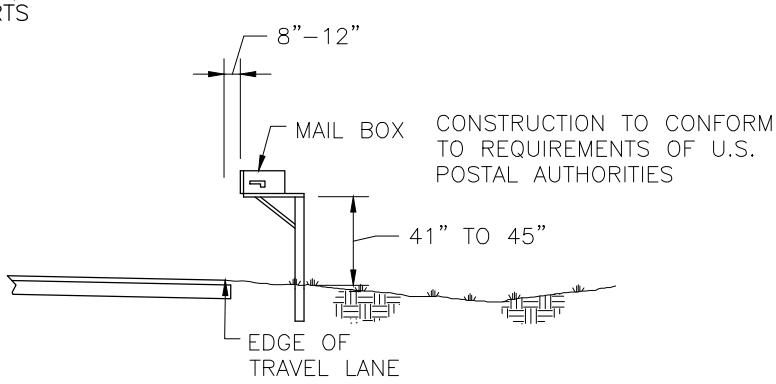

LATERAL PLACEMENT WITH NO SHOULDER OR TURNOUT
(EQUAL TO OR LESS THAN 30MPH)

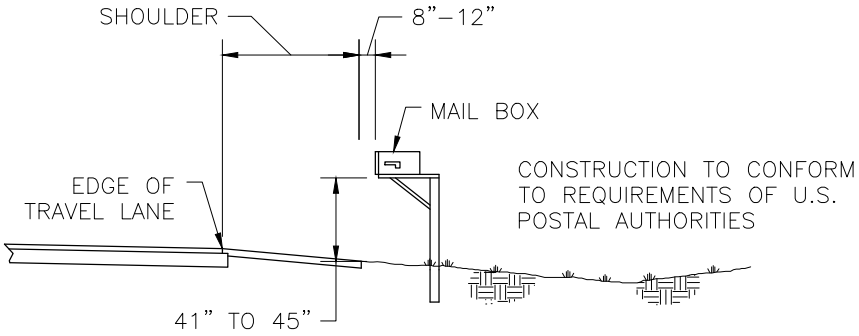

LATERAL PLACEMENT WITH SHOULDER OR TURNOUT
(GREATER THAN 30MPH)

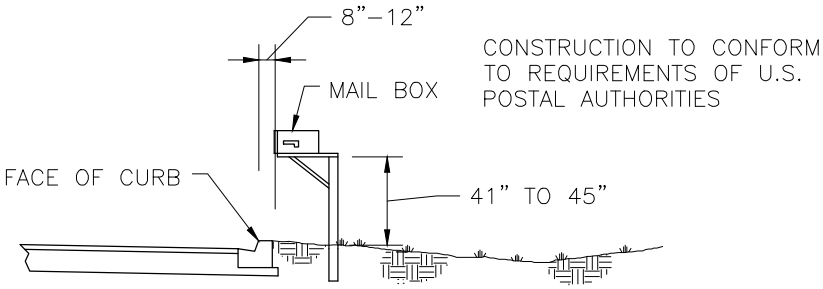

LATERAL PLACEMENT WITH CURB AND GUTTER

Marion County FLORIDA OFFICE OF THE COUNTY ENGINEER	MCBCC ADOPTED XX/XX/XX REVISION #	MAIL BOX INSTALLATION	7 EN 023

GENERAL DRIVEWAY NOTES

1. COMMERCIAL & MULTI-FAMILY SITES REQUIRE ADEQUATE VEHICULAR MANEUVERING AREA OFF RIGHT-OF-WAY AS BACKING OUT OF DRIVEWAY IS NOT PERMITTED.

2. ALL DRIVEWAYS ABUTTING A ROADWAY WITH A SPEED LIMIT OF 40 MPH OR ABOVE MUST HAVE DRIVEWAY CULVERTS WITH CONCRETE MITERED END SECTIONS.

3. ALL COMMERCIAL DRIVEWAYS SHALL HAVE CONCRETE MITERED END SECTIONS.

4. RADIUS MINIMUMS: 5 FEET FOR RESIDENTIAL DRIVEWAY (INSIDE SUBDIVISION)
   10 FEET FOR RESIDENTIAL DRIVEWAY (OUTSIDE SUBDIVISION)
   25 FEET FOR COMMERCIAL DRIVEWAY

5. MINIMUM CULVERT DIAMETER: 15"
   (CULVERT DIAMETER TO BE DETERMINED BY COUNTY FIELD INSPECTION)

6. CULVERT MATERIAL SHALL BE 14 GAUGE CORRUGATED METAL PIPE OR APPROVED EQUIVALENT.

7. RESIDENTIAL & COMMERCIAL DRIVEWAYS SHALL BE CONSTRUCTED OF 6" REINFORCED CONCRETE WITH 6"x6"x#10 WELDED WIRE ELEVATED 2" OFF THE GROUND AT FORM-UP, OVER 6" STABILIZATION OR 1 1/4" ASPHALT OVER 6" COMPACTED AND PRIMED LIMEROCK (LBR 100).

8. ALL CONCRETE APRONS REQUIRE AN EXPANSION JOINT AT THE EDGE OF THE EXISTING PAVEMENT/PAVED SHOULDER EDGE.

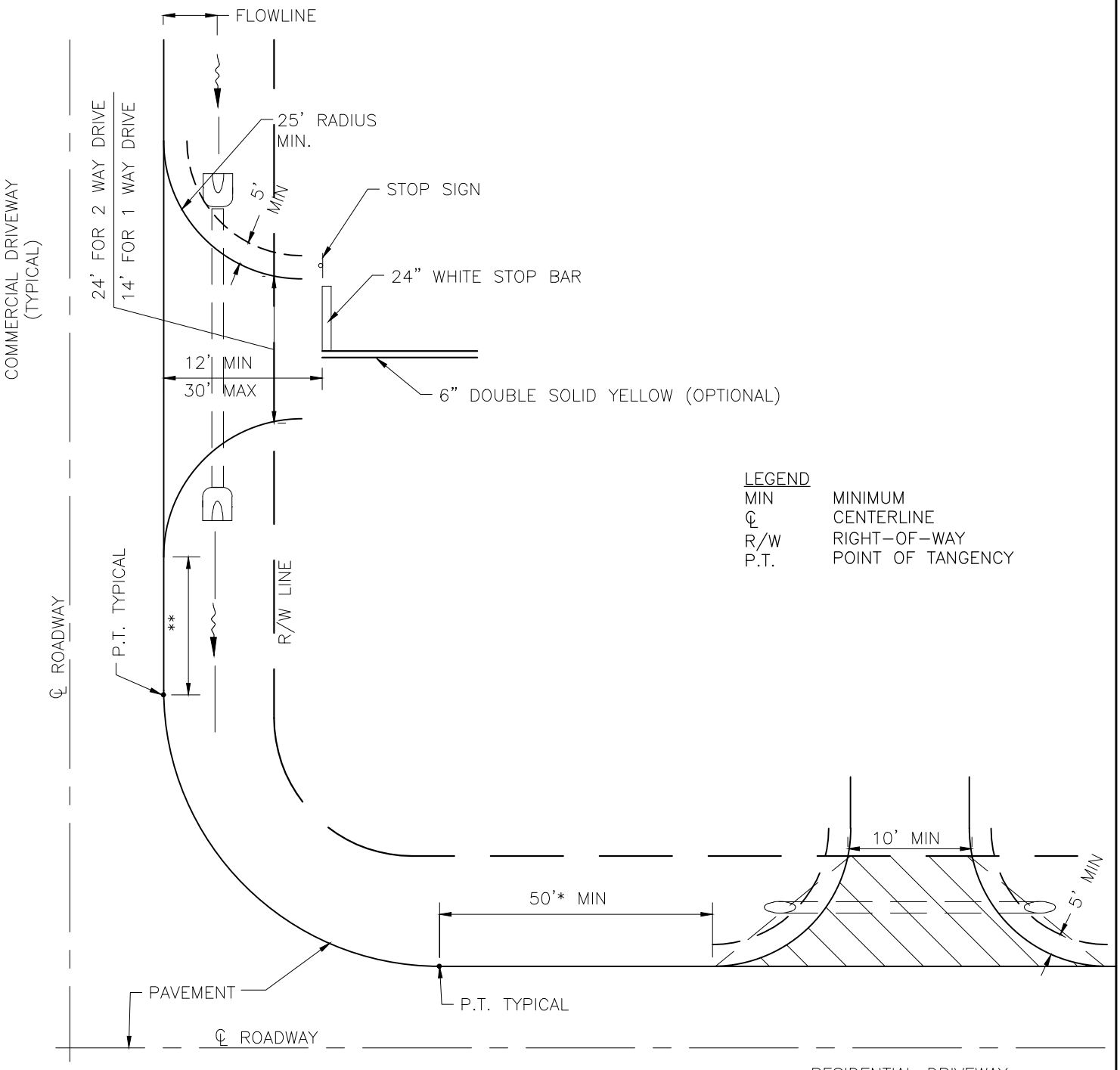

NOTES:

1. * THIS DISTANCE SHALL BE THE LESSER OF 1/2 THE LOT WIDTH OR 50 FT.
2. ** SEE TABLES 6.10.5-1 & 6.10.5-2 FOR SPACING REQUIREMENTS.
3. STOP SIGN AND STOP BAR SHALL BE PROVIDED WHEN PROJECTED DRIVEWAY DAILY TRAFFIC IS 25 VEHICLES PER HOUR OR GREATER.

Marion County FLORIDA OFFICE OF THE COUNTY ENGINEER	MCBCC ADOPTED XX/XX/XX REVISION #	COMMERCIAL & RESIDENTIAL DRIVEWAYS AT INTERSECTIONS	7 EN 025

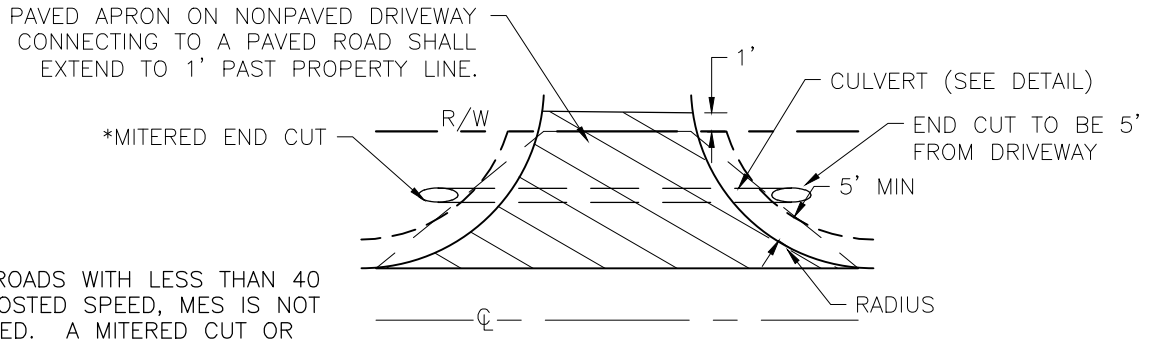

PLAN VIEW

* ON ROADS WITH LESS THAN 40 MPH POSTED SPEED, MES IS NOT REQUIRED. A MITERED CUT OR FLARED END IS ALLOWABLE. ROADS WITH A POSTED SPEED OF 40 MPH OR MORE REQUIRE A POURED MITERED END SECTION.

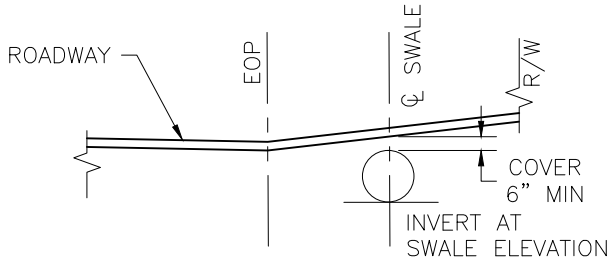

SECTION VIEW

DRIVEWAY W/CULVERT

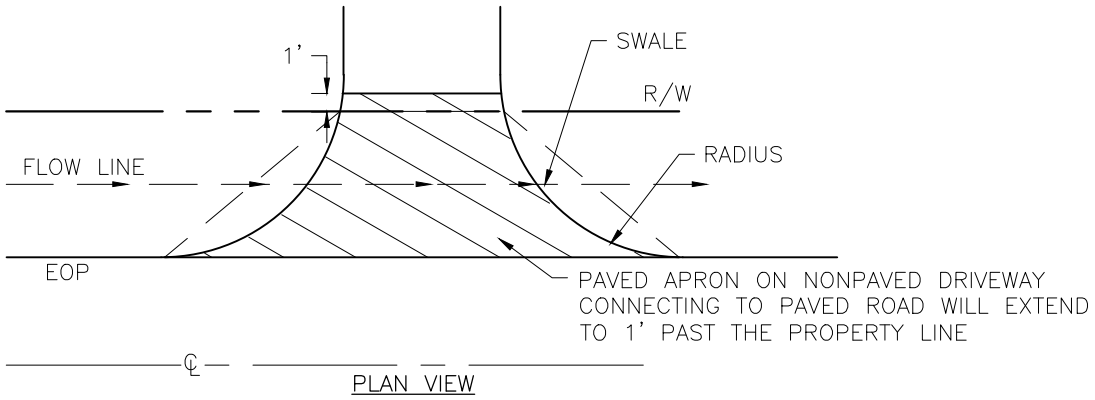

PLAN VIEW

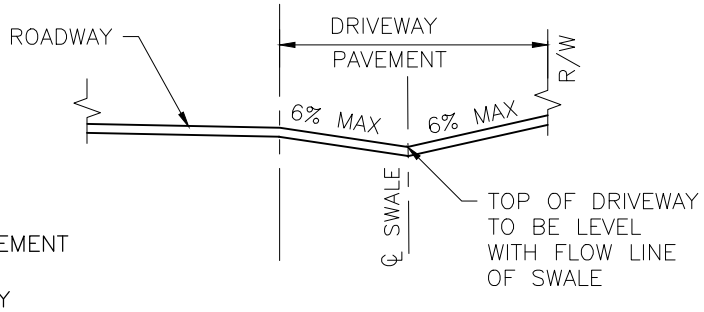

SECTION VIEW

DRIVEWAY W/SWALE

LEGEND

EOP	EDGE OF PAVEMENT
℄	CENTERLINE
R/W	RIGHT-OF-WAY
MIN	MINIMUM
MES	MITERED END SECTION

Marion County FLORIDA OFFICE OF THE COUNTY ENGINEER	MCBCC ADOPTED XX/XX/XX REVISION #	DRIVEWAY W/CULVERT & DRIVEWAY W/SWALE	7 EN 026

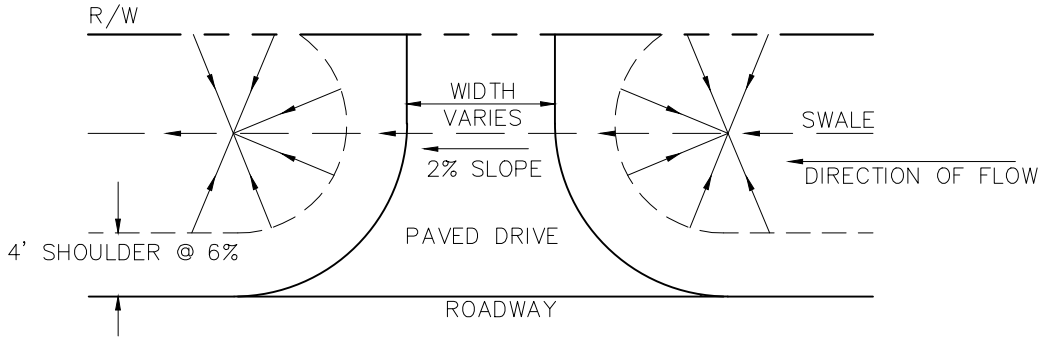

PLAN VIEW

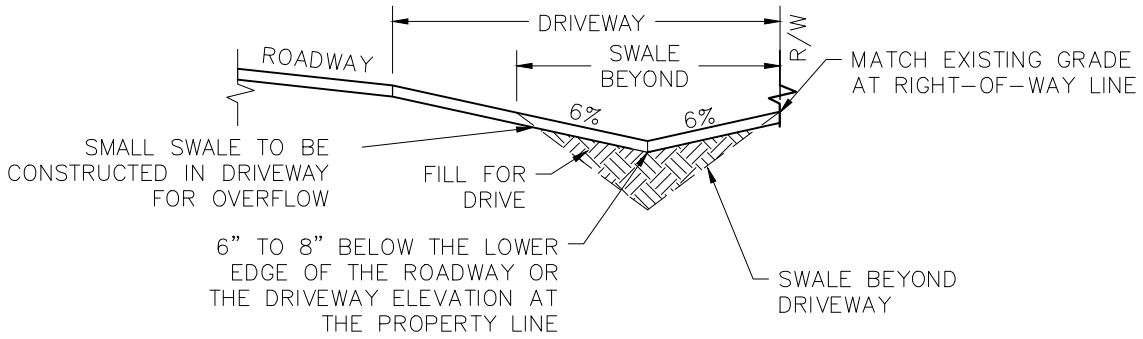

SECTION VIEW

DRIVEWAYS W/DITCH BLOCK

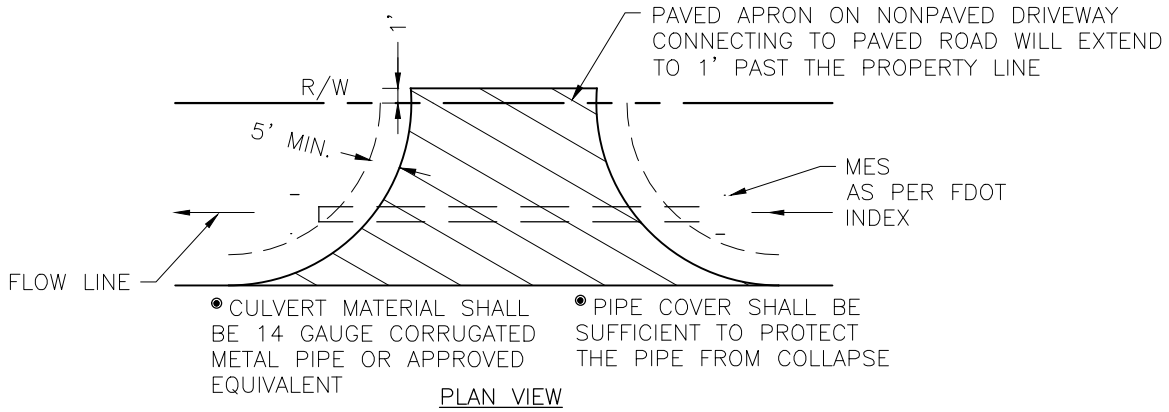

PLAN VIEW

LEGEND

MIN	MINIMUM
℄	CENTERLINE
R/W	RIGHT-OF-WAY
MES	MITERED END SECTION

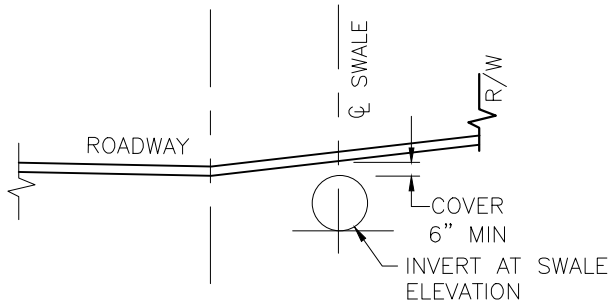

SECTION VIEW

DRIVEWAYS W/CULVERT & CONCRETE
MITERED END SECTIONS

Marion County FLORIDA OFFICE OF THE COUNTY ENGINEER	MCBCC ADOPTED XX/XX/XX REVISION #	DRIVEWAY W/DITCH BLOCK & DRIVEWAY W/CULVERT & CONCRETE MITERED END SECTION	7 EN 027

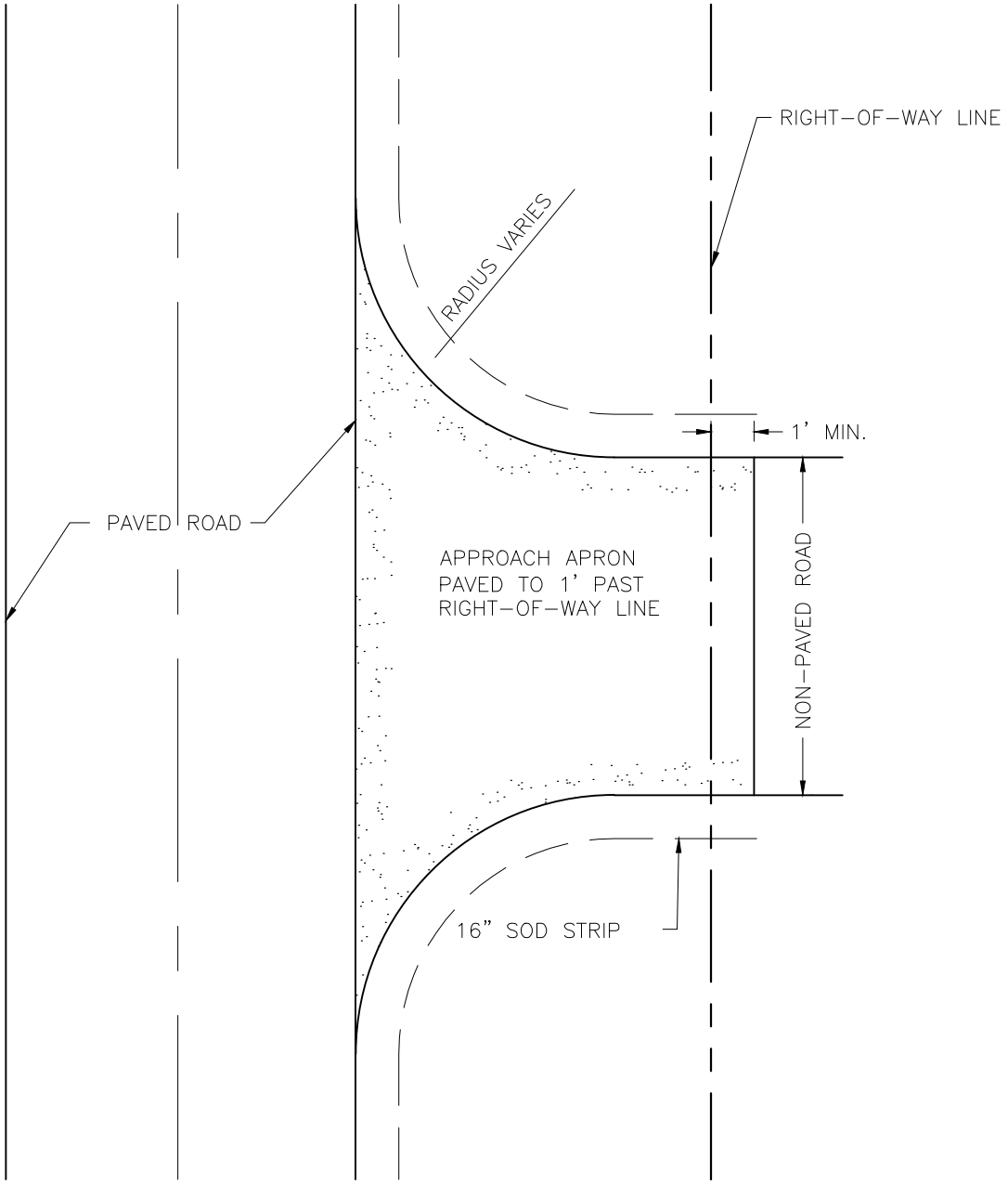

Marion County FLORIDA OFFICE OF THE COUNTY ENGINEER	MCBCC ADOPTED XX/XX/XX REVISION #	PAVED APPROACH APRON	7 EN 028

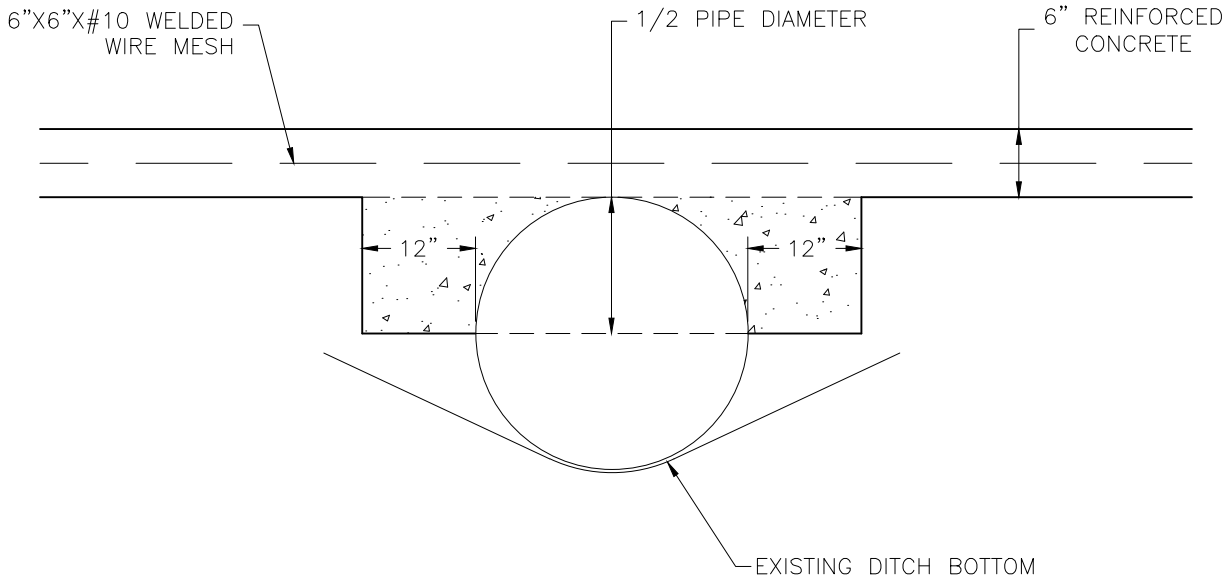

NOTE:
PLACE PIPE AT DITCH BOTTOM AND COVER WITH FILL. THEN CUT OUT AN AREA ON EACH SIDE OF THE PIPE 12" WIDE AND 1/2 THE PIPE DIAMETER DEEP, (e.g.: FOR A 15" PIPE CUT OUT 7 1/2" DEEP) AND FILL WITH CONCRETE.

Marion County FLORIDA OFFICE OF THE COUNTY ENGINEER	MCBCC ADOPTED XX/XX/XX REVISION #	SADDLE FOR DRIVEWAY CULVERT	7 EN 029

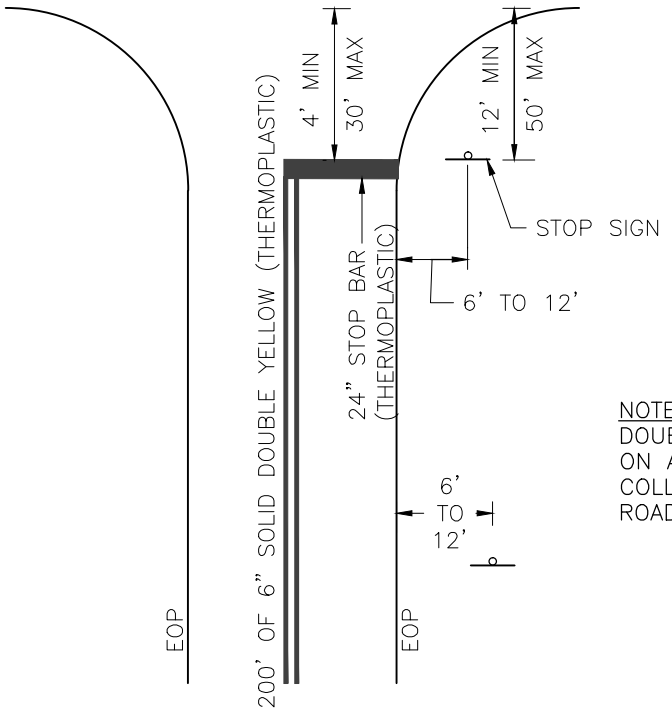

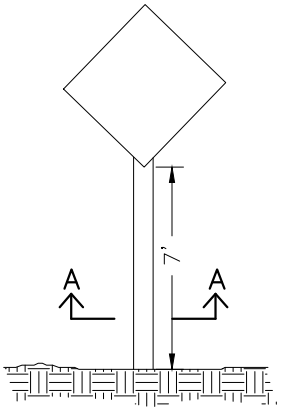

TYPICAL TRAFFIC CONTROL SIGN

NOTE:
DOUBLE SOLID STRIPING IS REQUIRED ON ALL ROADS APPROACHING ARTERIAL, COLLECTOR AND MAJOR LOCAL ROADS.

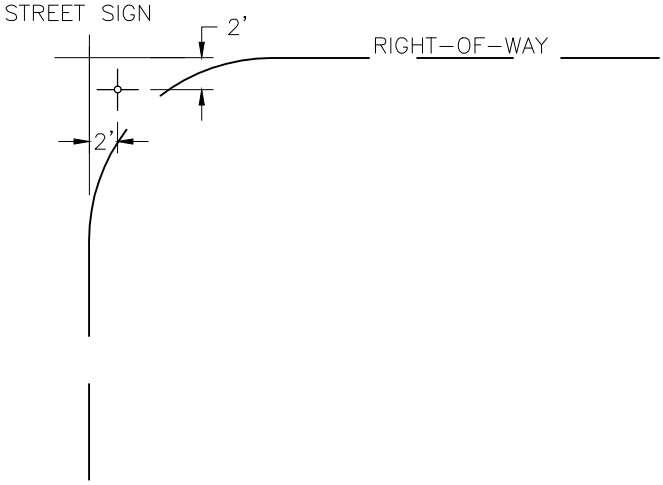

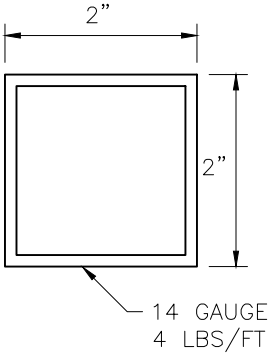

SECTION A–A

LEGEND

EOP	EDGE OF PAVEMENT
MIN	MINIMUM
MAX	MAXIMUM
—o—	TRAFFIC SIGN

Marion County FLORIDA OFFICE OF THE COUNTY ENGINEER	MCBCC ADOPTED XX/XX/XX	INTERSECTION SIGN AND STRIPING DETAIL	7
	REVISION #		EN 030

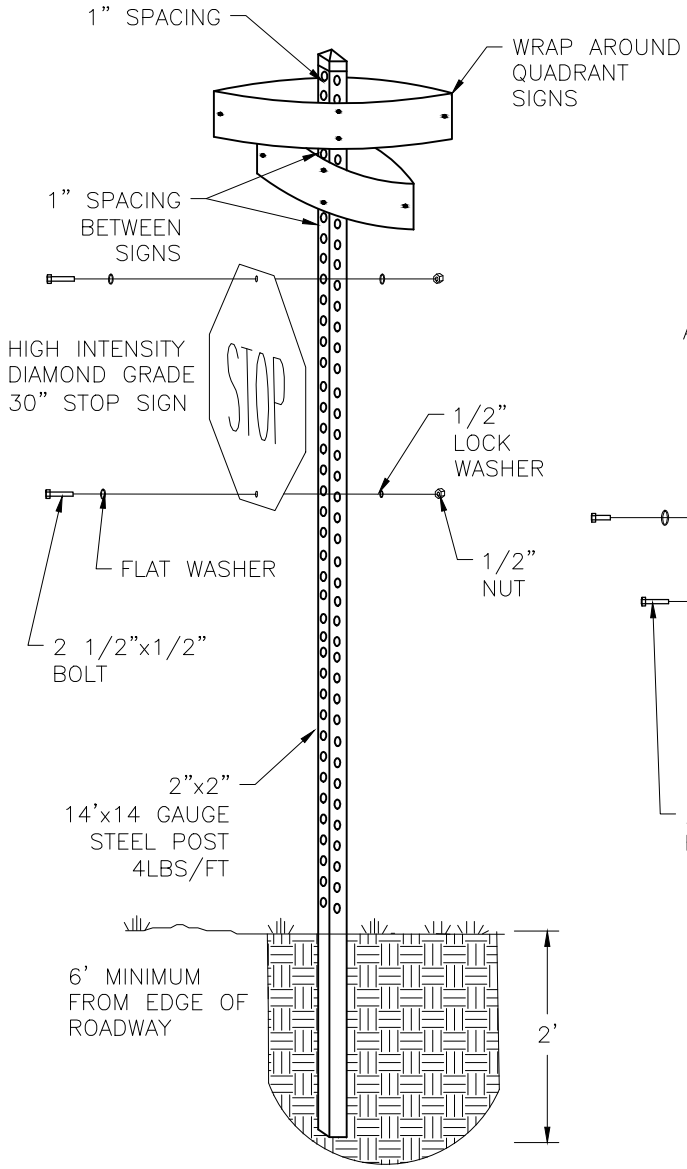

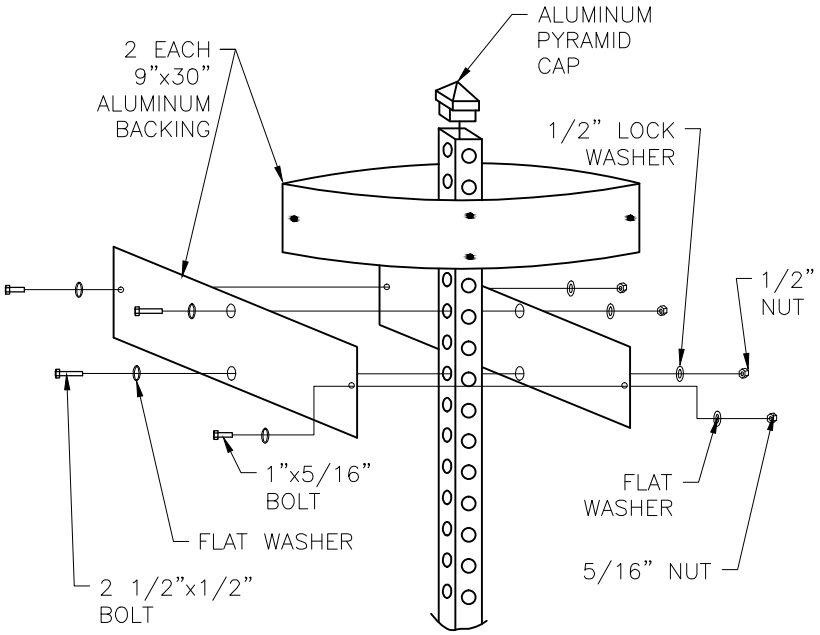

Marion County FLORIDA OFFICE OF THE COUNTY ENGINEER	MCBCC ADOPTED XX/XX/XX REVISION #	COMBINED STREET NAME & STOP SIGN INSTALLATION	7 EN 031

GREEN LETTERS ON A WHITE BACKGROUND – PRIVATE OR NON–COUNTY MAINTAINED
WHITE LETTERS ON A GREEN BACKGROUND – PUBLIC OR COUNTY MAINTAINED

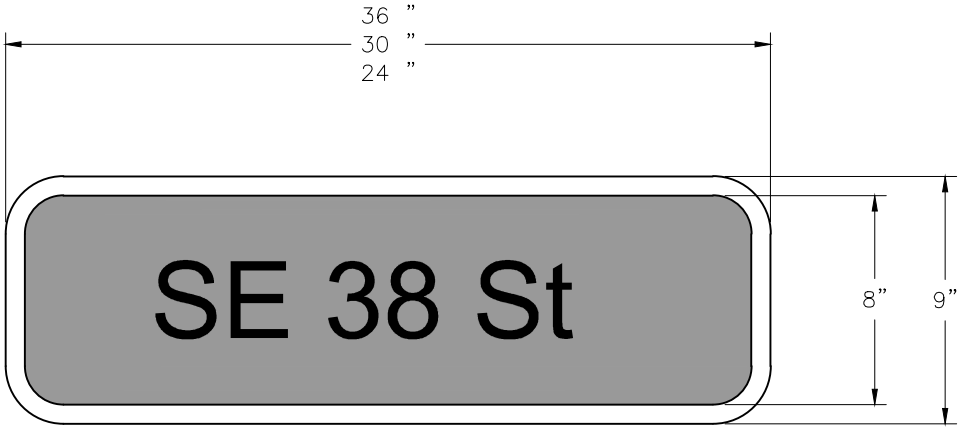

HELVETICA MED. COMP. AK REV. A

HIGH–INTENSITY BACKGROUND WITH TRANSPARENT
GREEN FILM OVERLAY. DIE–CUT LETTERS

Marion County FLORIDA OFFICE OF THE COUNTY ENGINEER	MCBCC ADOPTED XX/XX/XX REVISION #	STREET SIGN	7 EN 032

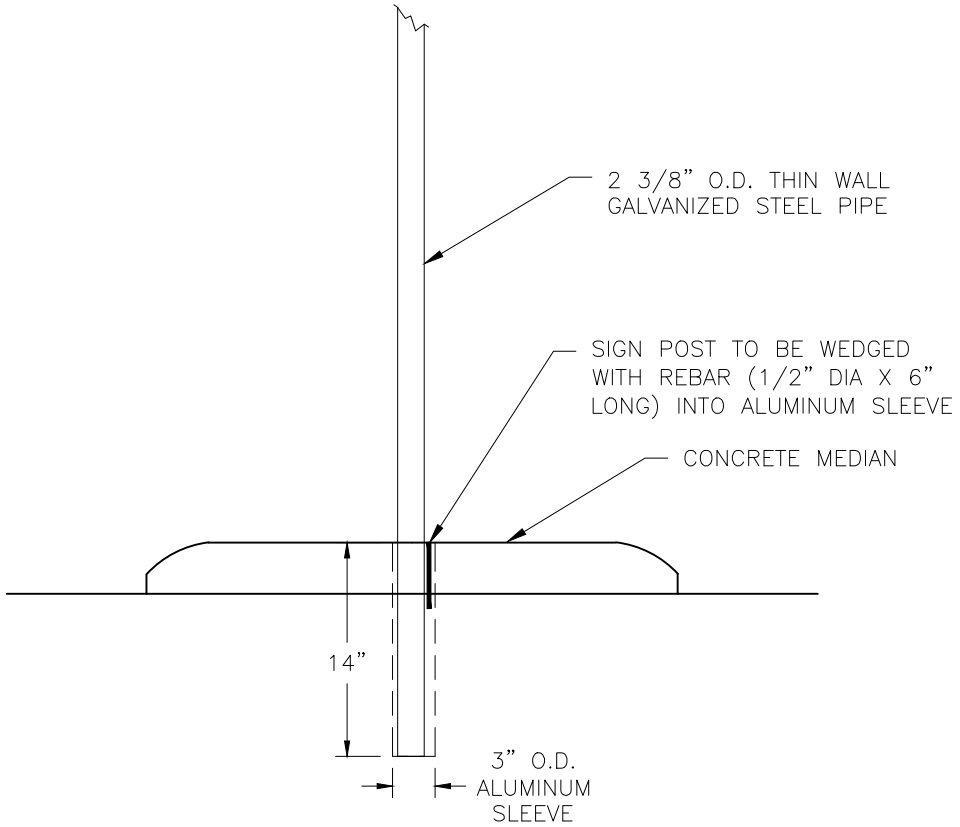

SECTION A–A

LEGEND

DIA	DIAMETER
O.D.	OUTSIDE DIAMETER

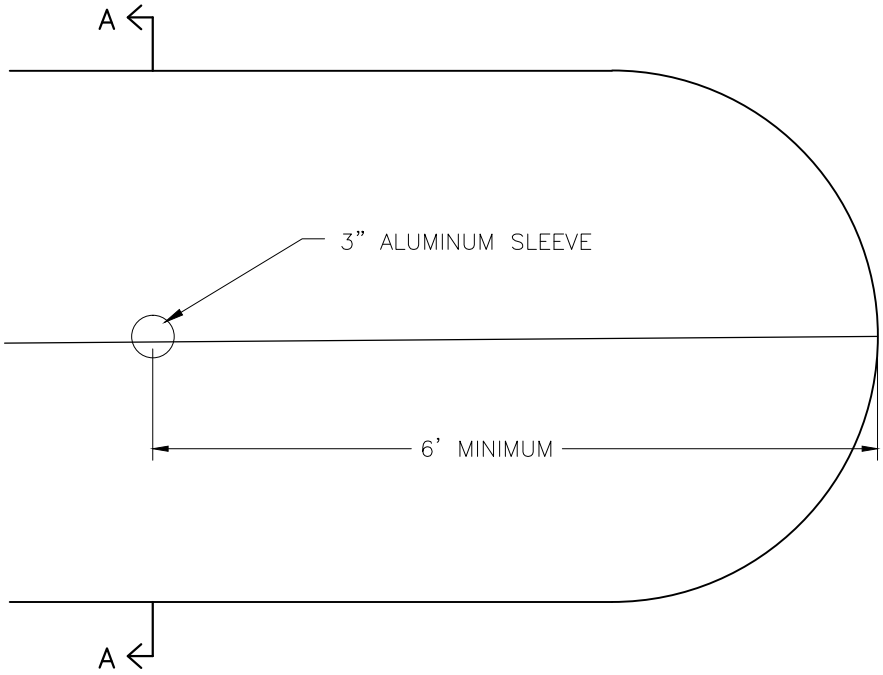

TOP VIEW MEDIAN NOSE

Marion County FLORIDA OFFICE OF THE COUNTY ENGINEER	MCBCC ADOPTED XX/XX/XX REVISION #	TRAFFIC SIGN INSTALLATION INTO CONCRETE MEDIAN	7 EN 033

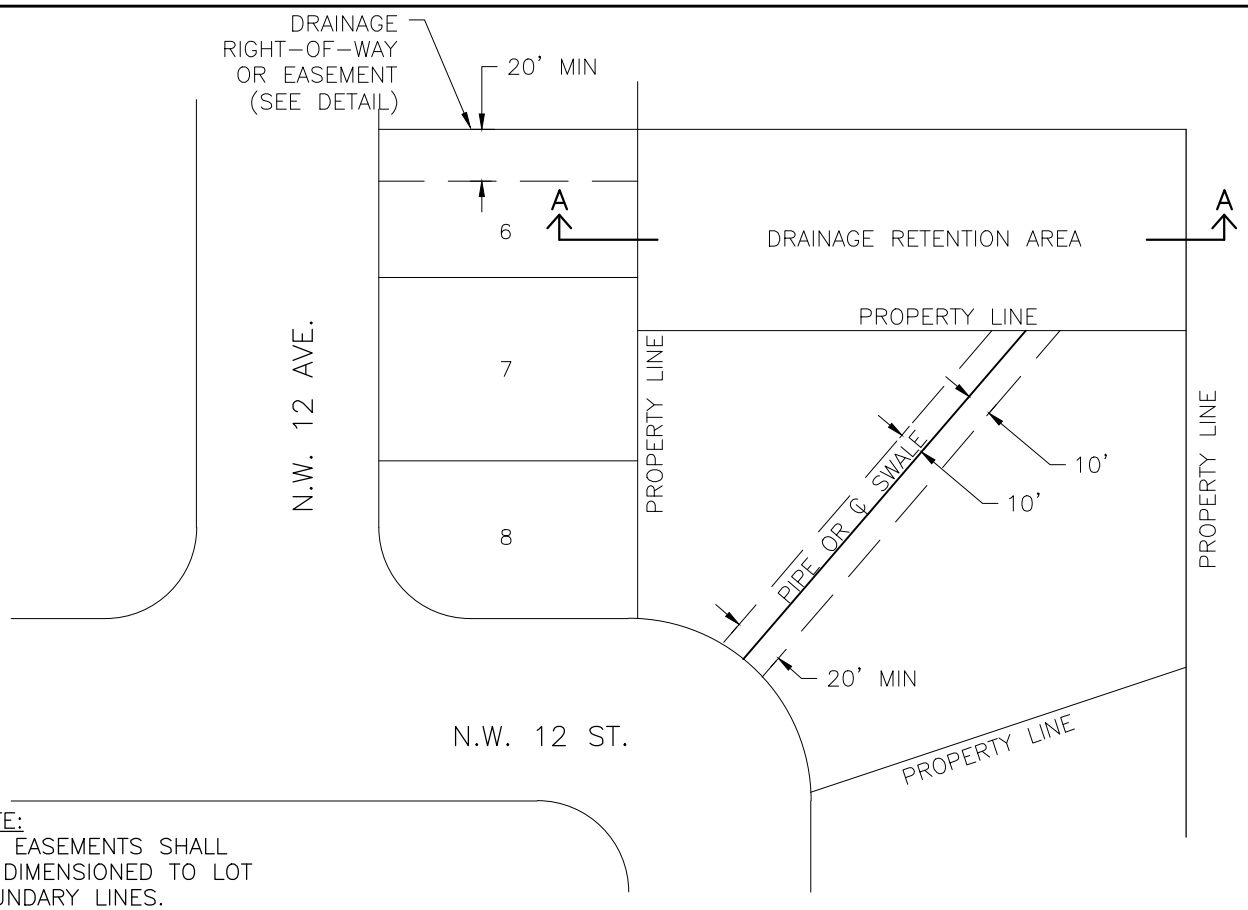

NOTE:
ALL EASEMENTS SHALL BE DIMENSIONED TO LOT BOUNDARY LINES.

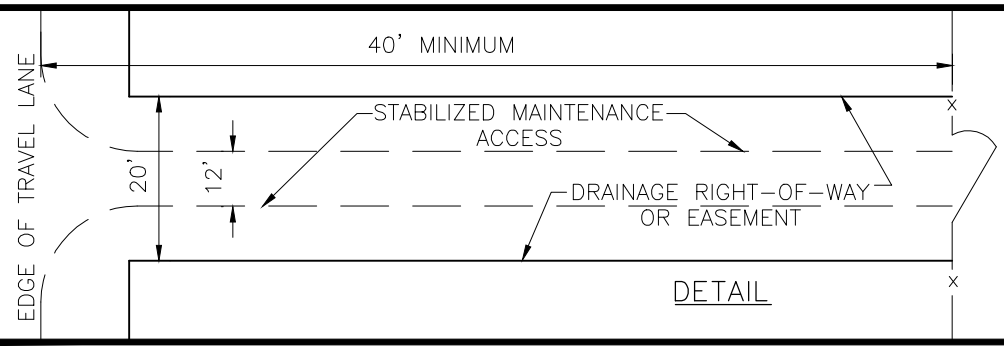

DETAIL

DRAINAGE INGRESS/EGRESS SHALL INCLUDE A 12 FOOT WIDE STABILIZED DRIVE. THIS DRIVE SHALL BE LOCATED AS NECESSARY TO ACCOMMODATE FOR SWALE/PIPE IF NEEDED.

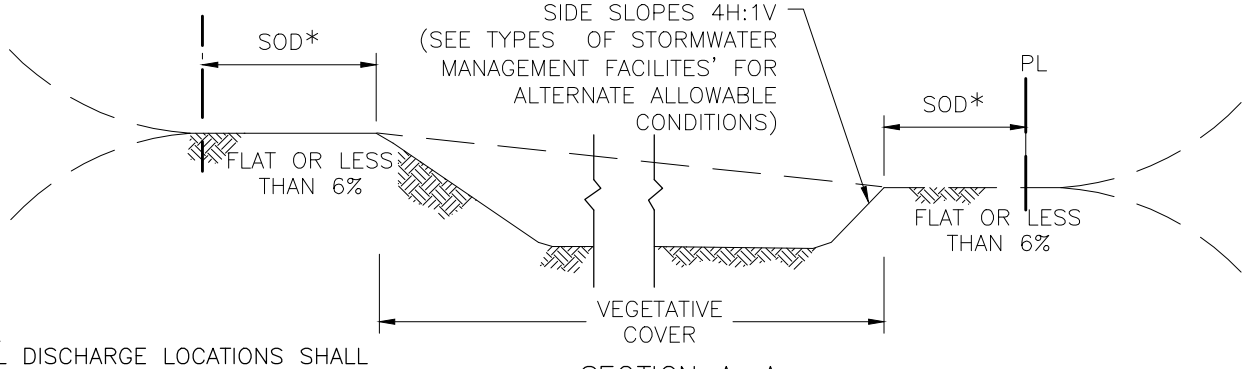

SECTION A–A

NOTES:
1. ALL DISCHARGE LOCATIONS SHALL HAVE SUFFICIENT PERMANENT EROSION CONTROL FEATURES, SUCH AS SPLASH PADS, TO DISSIPATE THE ENERGY RECEIVED.
2. * 5' = PRIVATELY MAINTAINED
   12' = PUBLICLY MAINTAINED

LEGEND
PL PROPERTY LINE
℄ CENTERLINE

Marion County FLORIDA OFFICE OF THE COUNTY ENGINEER	MCBCC ADOPTED XX/XX/XX	DRAINAGE RETENTION AREA (PUBLICLY OR PRIVATELY MAINTAINED SUBDIVISIONS)	7
	REVISION #		EN 034

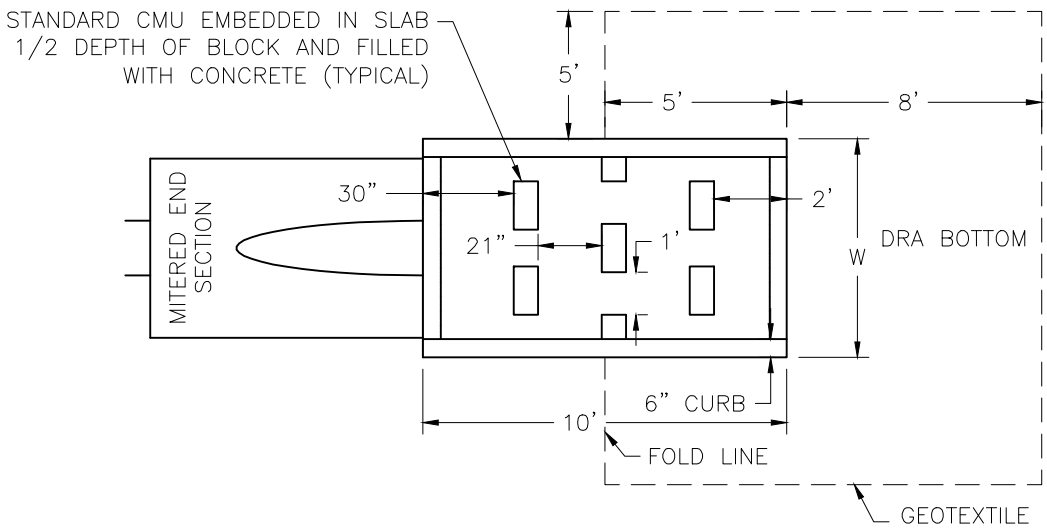

PIPE SIZE	WIDTH	CMU	
		8 x 16	8 x 8
15"	6'	3	2
18"	7'	5	0
24"	7'	5	0
30"	8'	5	2
36"	9'	7	0
42"	9'	7	0

NOTES:
1. BLOCK CONFIGURATION VARIES ACCORDING TO PIPE SIZE.
2. GEOTEXTILE, WHEN REQUIRED, SHALL BE INSTALLED ACCORDING TO MANUFACTURER'S RECOMMENDATIONS. FASTEN FABRIC TO CONCRETE STRUCTURE PER FDOT INDEX 281.
3. SPLASH PADS WITH ELLIPTICAL PIPE SHALL BE PAID UNDER THE CONTRACT UNIT PRICE FOR THE EQUIVALENT WIDTH OF CIRCULAR SIZE IN TABLE.

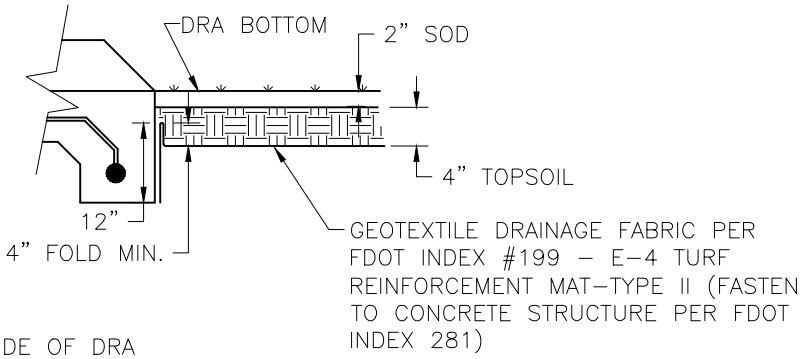

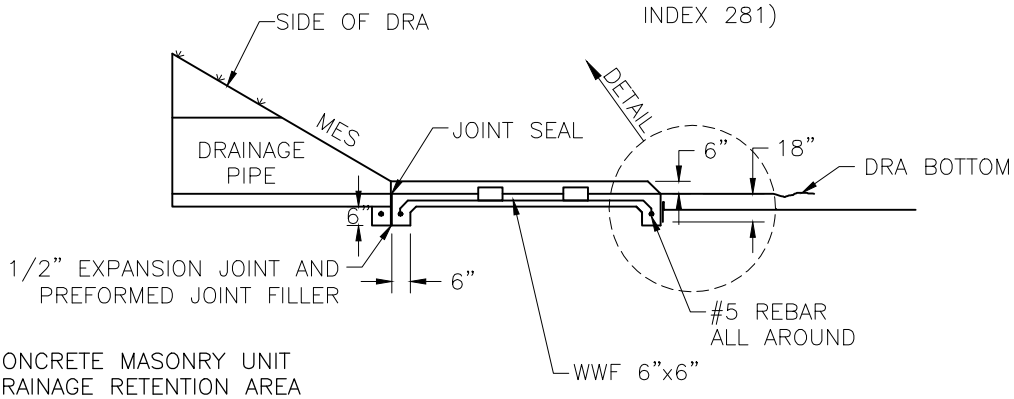

LEGEND

CMU	CONCRETE MASONRY UNIT
DRA	DRAINAGE RETENTION AREA
MES	MITERED END SECTION
MIN	MINIMUM

Marion County FLORIDA OFFICE OF THE COUNTY ENGINEER	MCBCC ADOPTED XX/XX/XX	TYPICAL SPLASH PAD WITH DISSIPATER	7
	REVISION #		EN 035

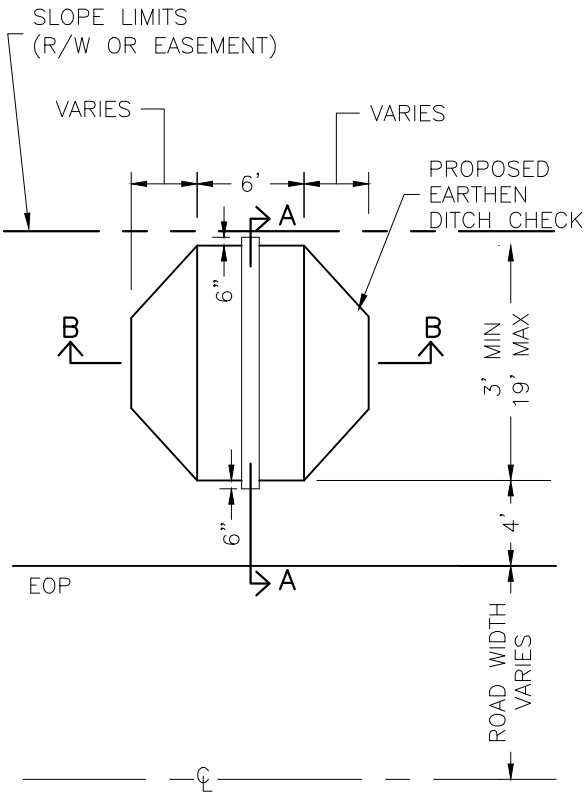

PLAN VIEW

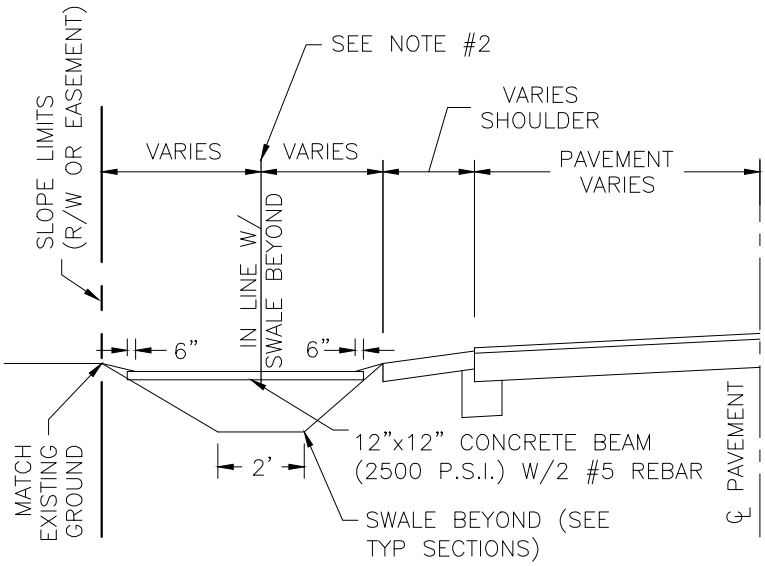

SECTION A–A

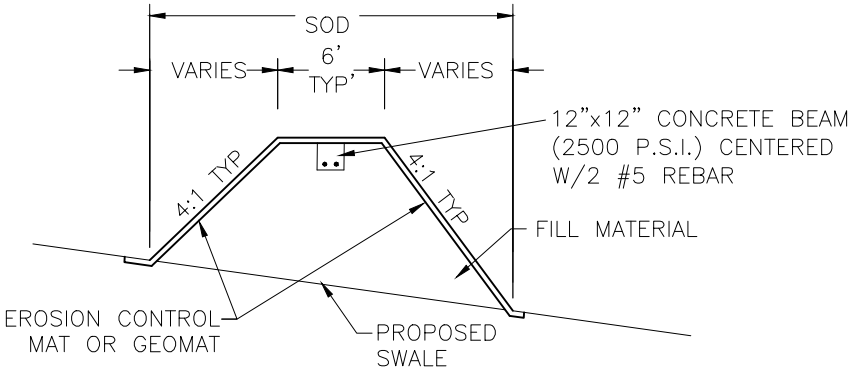

SECTION B–B

LEGEND

MIN	MINIMUM
MAX	MAXIMUM
EOP	EDGE OF PAVEMENT
℄	CENTERLINE
R/W	RIGHT–OF–WAY
TYP	TYPICAL

NOTES:

1. SECTIONS ARE SYMMETRICAL ABOUT CENTERLINE. SEE PLAN PROFILES FOR STATION & LOCATION LEFT OR RIGHT.
2. TOP ELEVATION OF DITCH CHECK SHALL BE EITHER 0.2' LOWER THAN SLOPE LIMITS OR 0.1' LOWER THAN LIMEROCK BASE (WHICHEVER IS ULTIMATE LOW).

Marion County FLORIDA OFFICE OF THE COUNTY ENGINEER	MCBCC ADOPTED XX/XX/XX REVISION #	DITCH CHECK/BLOCK	7 EN 036

PLAN

NOTE:
FENCE CONSTRUCTION SHALL BE IN ACCORDANCE WITH FDOT DESIGN STANDARDS AND FDOT STANDARD SPECIFICATIONS.

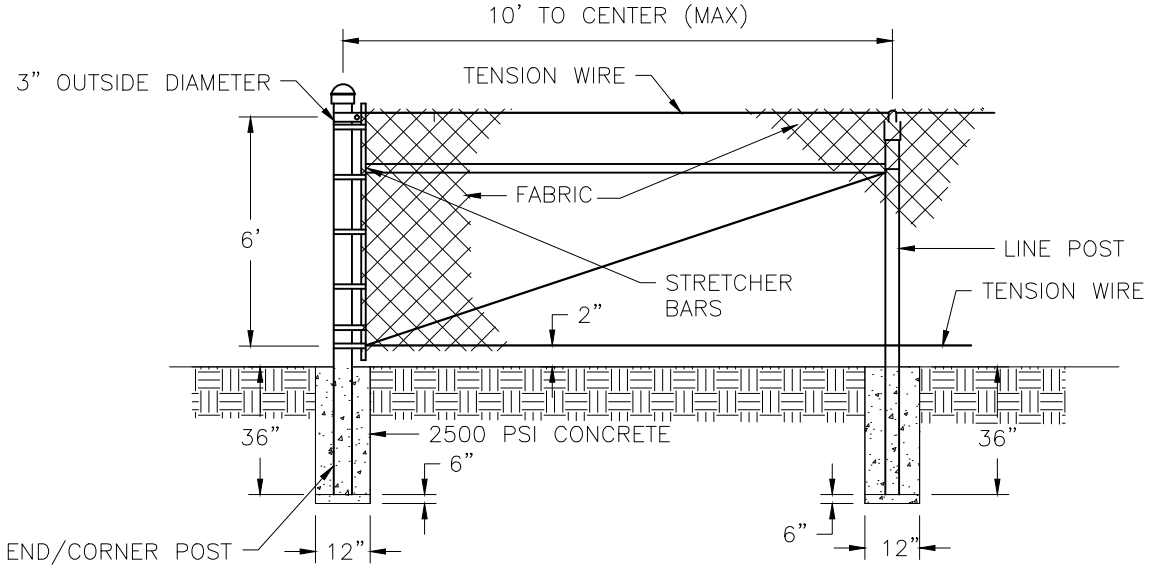

ELEVATION

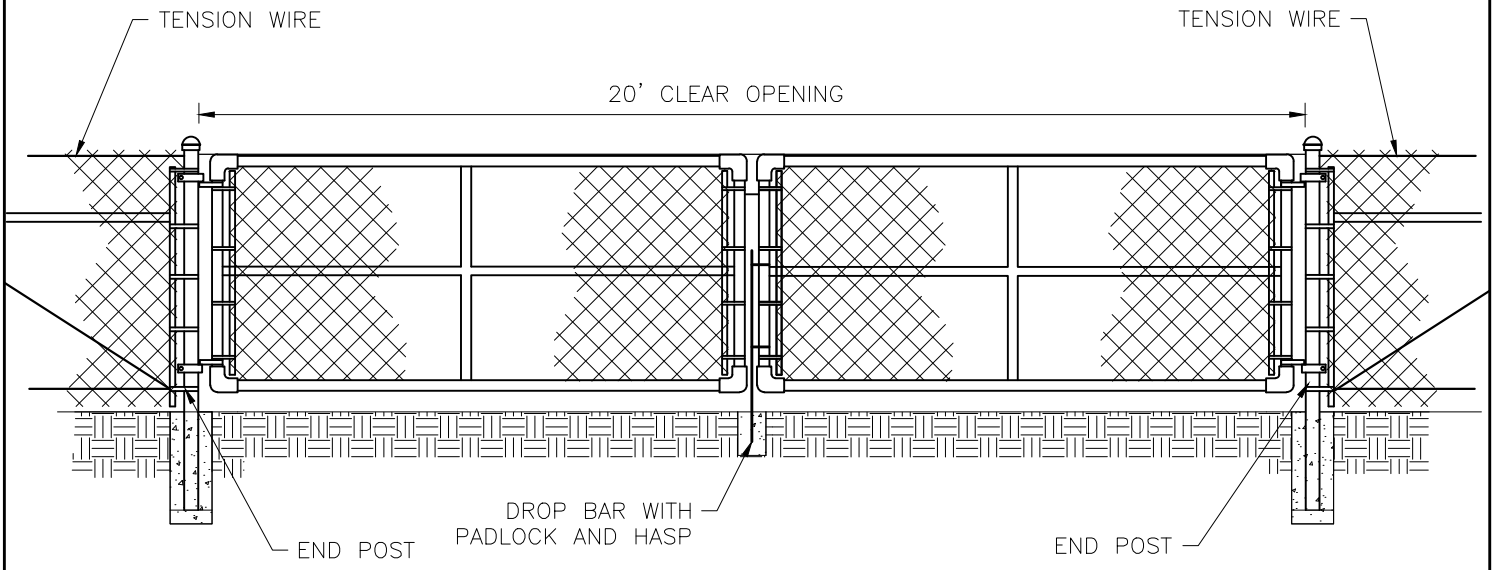

GATE ELEVATION

Marion County FLORIDA OFFICE OF THE COUNTY ENGINEER	MCBCC ADOPTED XX/XX/XX REVISION #	FENCE DETAILS	7 EN 037

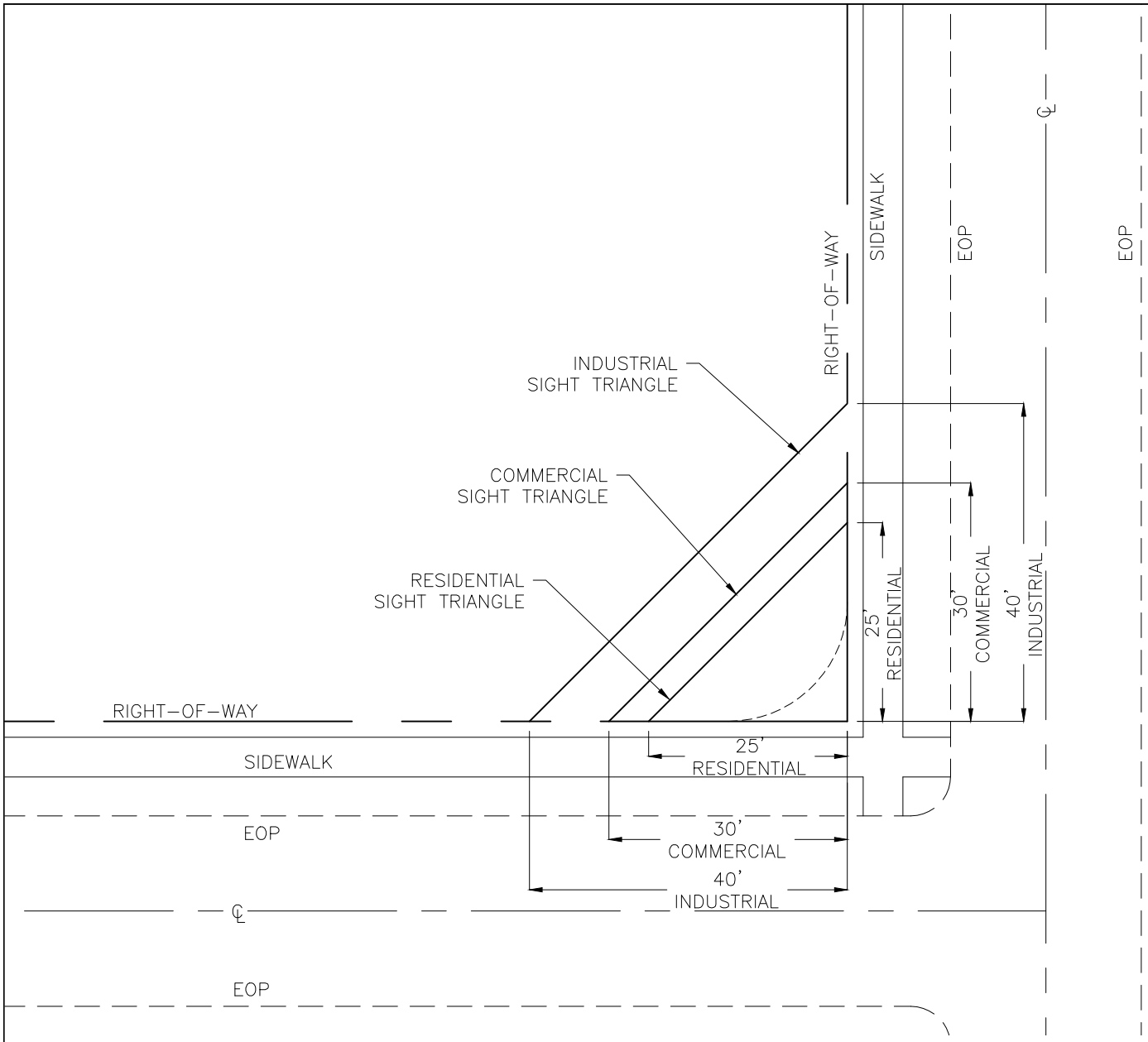

LEGEND
EOP EDGE OF PAVEMENT
℄ CENTERLINE OF ROADWAY

NOTE:
NO FENCE, WALL, HEDGE, SHRUB, STRUCTURE OR OTHER OBSTRUCTION TO VISION, BETWEEN A HEIGHT OF TWO AND ONE-HALF FEET AND EIGHT FEET ABOVE THE CENTER LINE GRADES OF INTERSECTING STREETS SHALL BE ERECTED, PLACED OR MAINTAINED WITHIN THE TRIANGLE SHOWN BELOW.

Marion County FLORIDA OFFICE OF THE COUNTY ENGINEER	MCBCC ADOPTED XX/XX/XX REVISION #	SIGHT TRIANGLE	7 EN 038

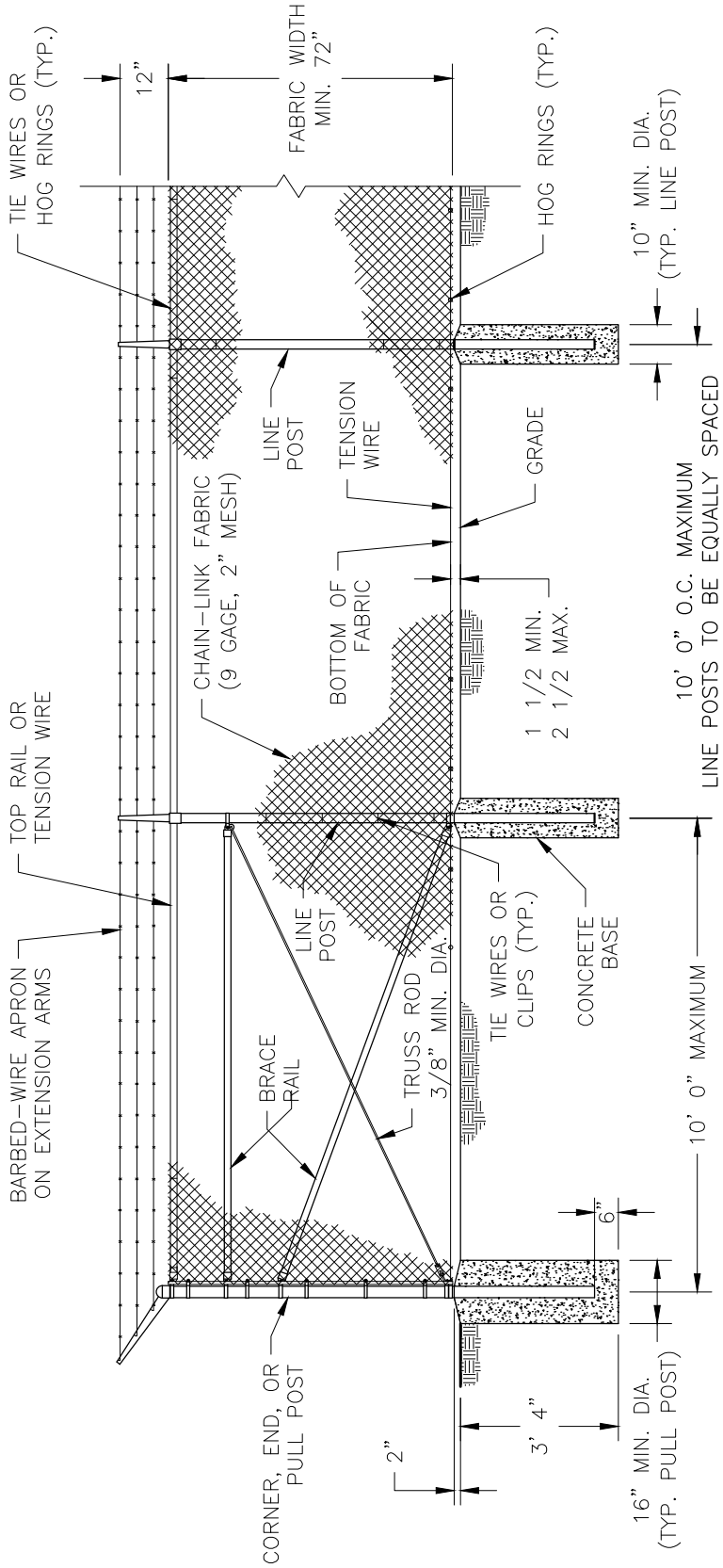

CHAIN-LINK SECURITY FENCE DETAIL

Marion County FLORIDA UTILITIES	MCBCC ADOPTED XX/XX/XX	CHAIN LINK FENCE	7
	REVISION #		UT 100

Marion County FLORIDA
UTILITIES

MCBCC ADOPTED
XX/XX/XX

REVISION #

CHAIN LINK FENCE ACCESSORIES

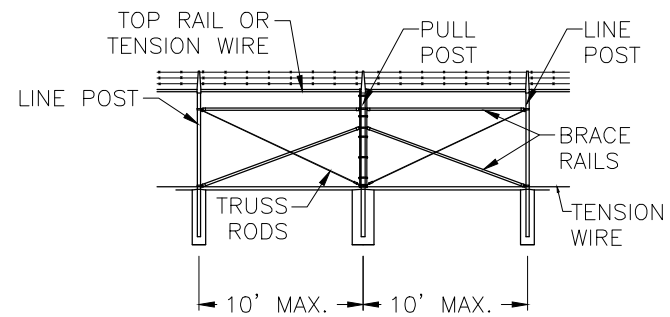

NOTE:
PROVIDE BRACE PANEL FOR STRAIGHT RUNS OVER 500'

BRACE PANEL DETAIL

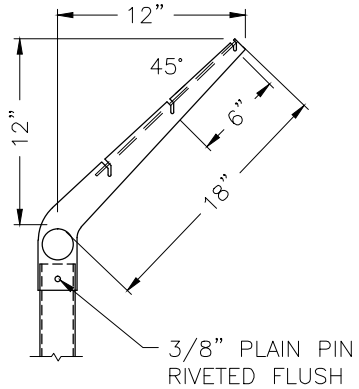

LINE POST

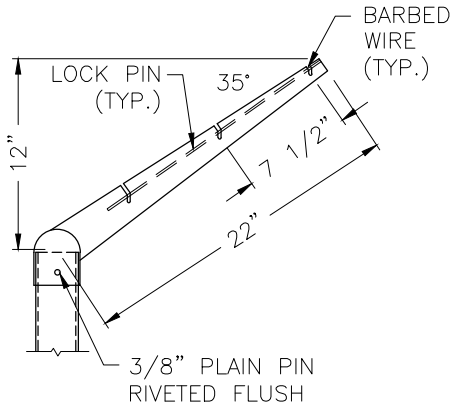

CORNER POST

EXTENSION ARM DETAILS

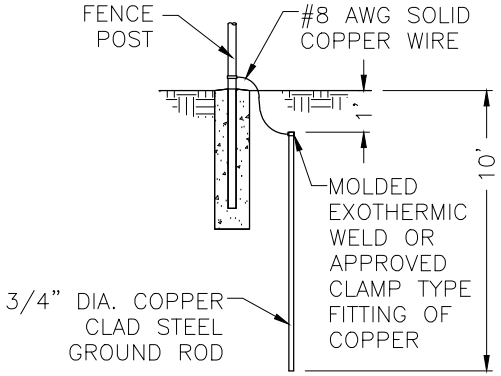

GROUNDING DETAIL

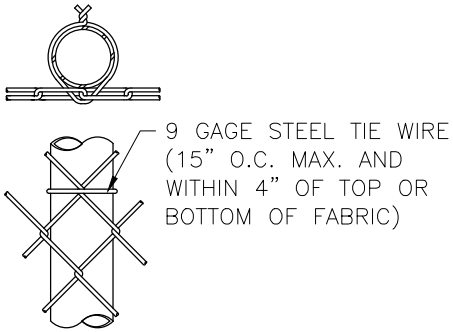

LINE POST ATTACHMENTS

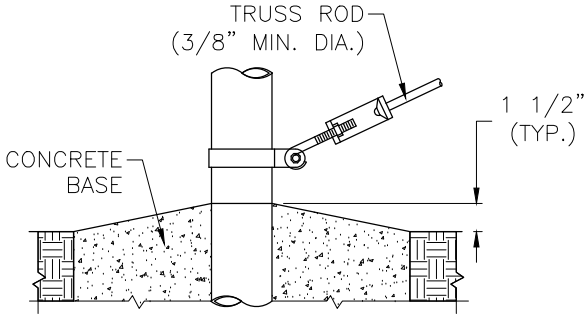

TRUSS ROD AND BAND

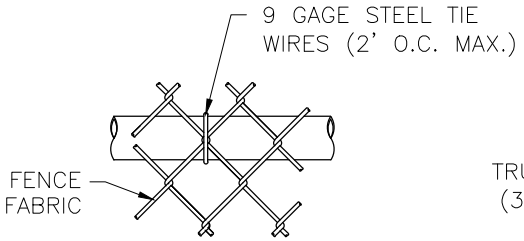

TOP OR BRACE RAIL ATTACHMENT

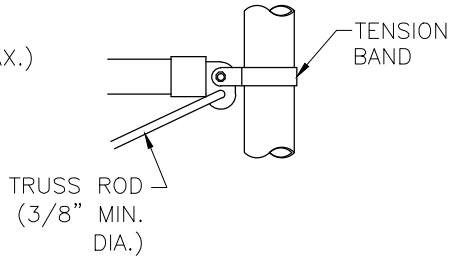

BRACE RAIL CLAMP DETAIL

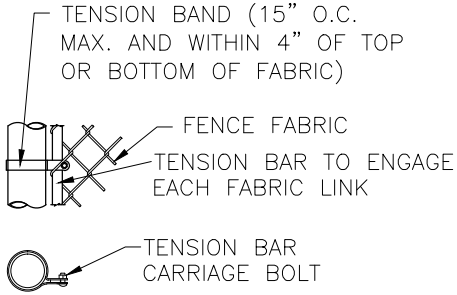

END OR GATE POST DETAIL

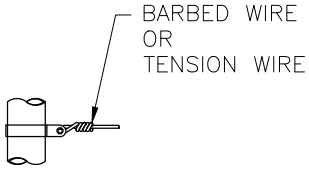

TENSION BAND DETAIL

FASTENING DETAILS

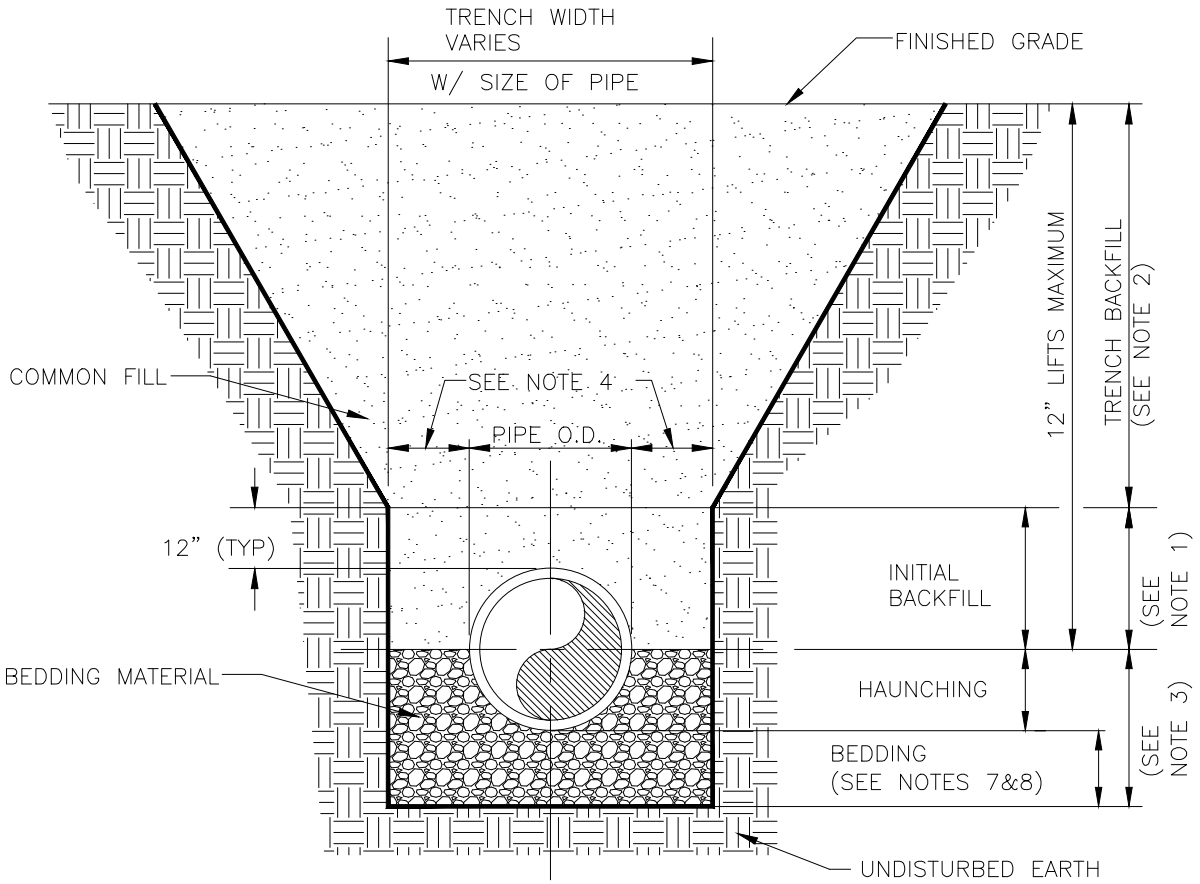

NOTES:

1. INITIAL BACKFILL: COMMON FILL COMPACTED TO 95% (98% UNDER PAVEMENT) OF THE MAXIMUM DENSITY
2. AS PER AASHTO T–180.
3. TRENCH BACKFILL: COMMON FILL COMPACTED TO 95% (98% UNDER PAVEMENT) OF THE MAXIMUM DENSITY
4. AS PER AASHTO T–180.
5. TYPE A BEDDING MATERIAL SHALL CONFORM TO FDOT NO. 57 AGGREGATE.
6. 15" MAX. (12" MIN.) FOR PIPE DIAMETER LESS THAN 24" AND 24" MAX (12" MIN) FOR PIPE DIAMETER 24" AND LARGER.
7. WATER SHALL NOT BE PERMITTED IN THE TRENCH DURING CONSTRUCTION.
8. ALL PIPE TO BE INSTALLED WITH BELL FACING UPSTREAM TO THE DIRECTION OF THE FLOW.
9. BEDDING DEPTH SHALL BE 4" MINIMUM FOR PIPE DIAMETER UP TO 12" AND 6" MINIMUM FOR PIPE DIAMETER 16" AND LARGER.
10. DEPTH FOR REMOVAL OF UNSUITABLE MATERIAL SHALL GOVERN DEPTH OF BEDDING ROCK BELOW THE PIPE. UTILITIES SHALL DETERMINE IN THE FIELD REQUIRED REMOVAL OF UNSUITABLE MATERIAL TO REACH SUITABLE FOUNDATION.
11. FINAL RESTORATION IN IMPROVED AREAS SHALL BE IN COMPLIANCE WITH ALL APPLICABLE REGULATIONS OF GOVERNING AGENCIES. SURFACE RESTORATION WITHIN MARION COUNTY RIGHT–OF–WAY SHALL COMPLY WITH REQUIREMENTS OF R/W UTILIZATION REGULATIONS AND ROAD CONSTRUCTION SPECIFICATIONS.

Marion County FLORIDA UTILITIES	MCBCC ADOPTED XX/XX/XX	TYPE "A" BEDDING AND TRENCHING	7
	REVISION #		UT 102

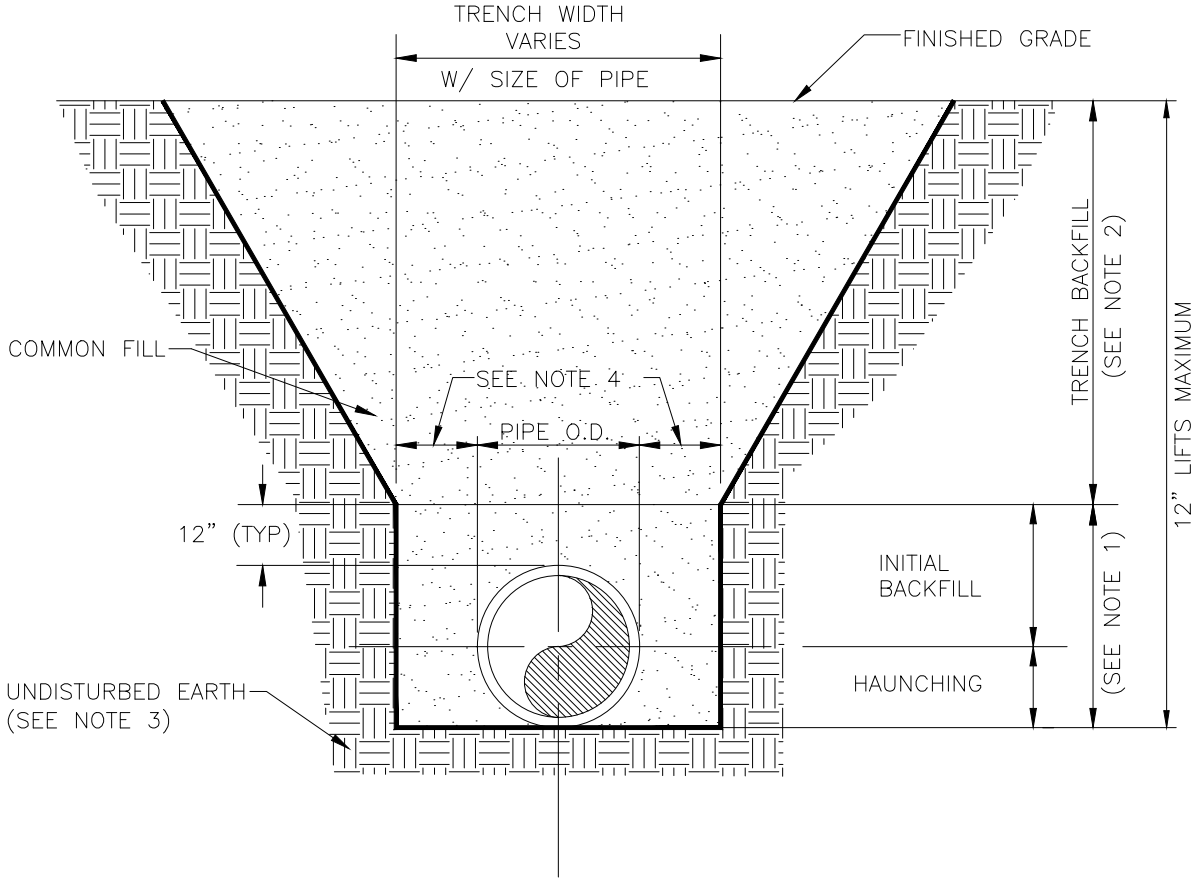

NOTES:

1. INITIAL BACKFILL AND HAUNCHING: SELECT COMMON FILL COMPACTED TO 95% (98% UNDER PAVEMENT) OF THE MAXIMUM DENSITY AS PER AASHTO T-180.
2. TRENCH BACKFILL: COMMON FILL COMPACTED TO 95% (98% UNDER PAVEMENT) OF THE MAXIMUM DENSITY AS PER AASHTO T-180.
3. PIPE BEDDING UTILIZING SELECT COMMON FILL OR BEDDING ROCK IN ACCORDANCE WITH TYPE A BEDDING AND TRENCHING DETAIL MAY BE REQUIRED AS DIRECTED BY UTILITIES.
4. 15" MAX. (12" MIN.) FOR PIPE DIAMETER LESS THAN 24" AND 24" MAX (12" MIN) FOR PIPE DIAMETER 24" AND LARGER.
5. WATER SHALL NOT BE PERMITTED IN THE TRENCH DURING CONSTRUCTION.
6. ALL PIPE TO BE INSTALLED WITH BELL FACING UPSTREAM TO THE DIRECTION OF THE FLOW.
7. FINAL RESTORATION IN IMPROVED AREAS SHALL BE IN COMPLIANCE WITH ALL APPLICABLE REGULATIONS OF GOVERNING AGENCIES. SURFACE RESTORATION WITHIN MARION COUNTY RIGHT-OF-WAY SHALL COMPLY WITH REQUIREMENTS OF RIGHT-OF-WAY UTILIZATION REGULATIONS AND ROAD CONSTRUCTION SPECIFICATIONS.

Marion County FLORIDA UTILITIES	MCBCC ADOPTED XX/XX/XX	TYPE "B" BEDDING AND TRENCHING	7
	REVISION #		UT 103

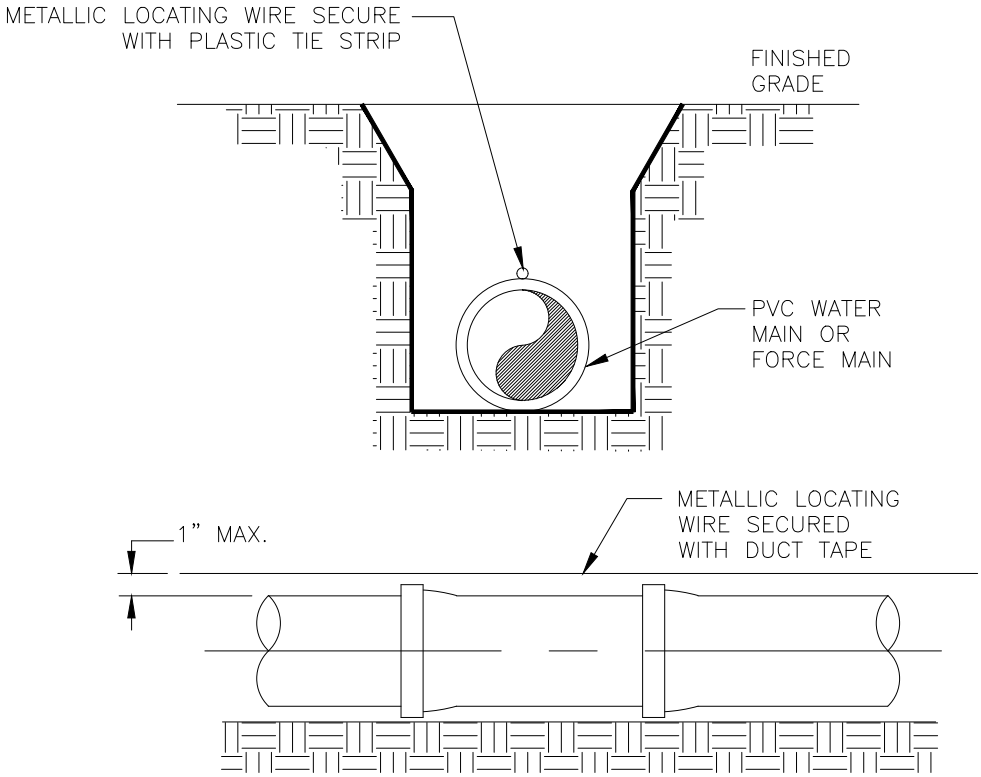

NOTES:

1. PVC PIPE SHALL REQUIRE INSULATED METALLIC LOCATING WIRE (14 GAUGE COPPER) CAPABLE OF
2. DETECTION BY A CABLE LOCATOR AND SHALL BE BURIED DIRECTLY ABOVE THE CENTERLINE OF THE PIPE.
3. LOCATING WIRE SHALL TERMINATE AT EACH VALVE BOX AND BE CAPABLE OF EXTENDING 12" ABOVE TOP OF BOX IN SUCH A MANNER SO AS NOT TO INTERFERE WITH VALVE OPERATION.
4. USE DUCT TAPE AS NECESSARY TO HOLD WIRE DIRECTLY ON THE TOP OF THE PIPE.
5. ALL WIRE CONNECTIONS IN VALVE BOXES SHALL BE SPLICED TOGETHER AND TAPED.
6. FOR HORIZONTAL DIRECTIONAL DRILLING, UTILIZE 2 LOCATING WIRES WITH ALUMINUM TENSILE STRENGTH OF 1800 PSI.

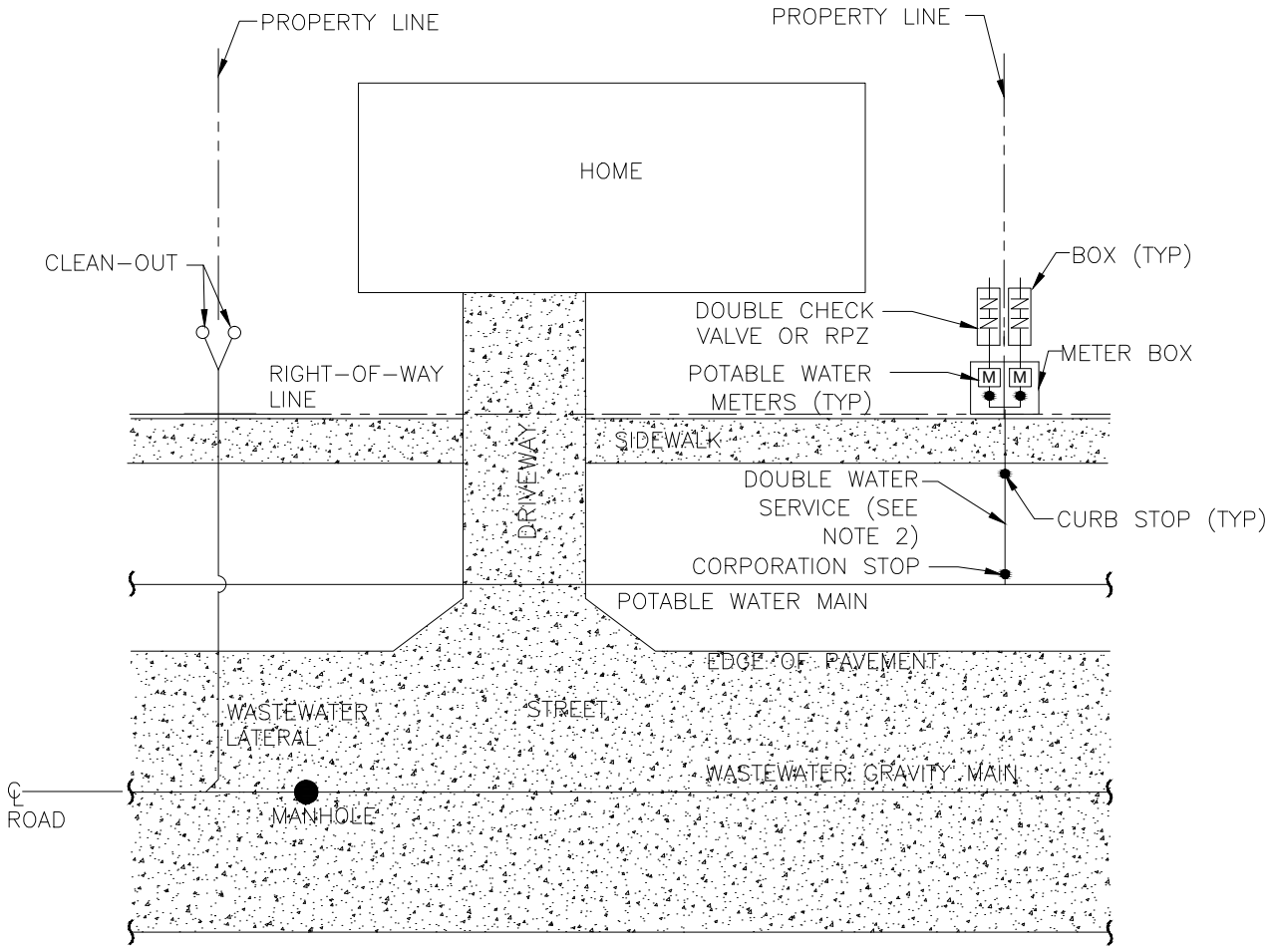

NOTE:

1. EACH POTABLE WATER SERVICE SHALL SERVE TWO LOTS IF RECLAIMED WATER IS AVAILABLE. EACH
2. SERVICE SHALL BE EQUIPPED WITH A DUAL CHECK BACKFLOW PREVENTER.
3. EACH RESIDENTIAL UNIT SHALL BE INDIVIDUALLY METERED.
4. SITEWORK CONTRACTOR SHALL INSTALL WATER,WASTEWATER AND RECLAIMED WATER SERVICES.
5. METER AND BOX SHALL BE INSTALLED BY MCU AND DUAL CHECK BACKFLOW PREVENTOR TO BE INSTALLED BY LICENSED BUILDING PLUMBING CONTRACTOR.
6. WASTEWATER LATERAL CLEAN-OUTS TO BE INSTALLED BY LICENSED BUILDING PLUMBING CONTRACTOR.
7. A DUAL CHECK VALVE DEVICE SHALL BE REQUIRED WHERE OTHER PRESSURIZED WATER SOURCES,
8. INCLUDING SWIMMING POOLS, ARE PRESENT.

Marion County FLORIDA UTILITIES	MCBCC ADOPTED XX/XX/XX	RESIDENTIAL SERVICE LOCATIONS	7
	REVISION #		UT 105

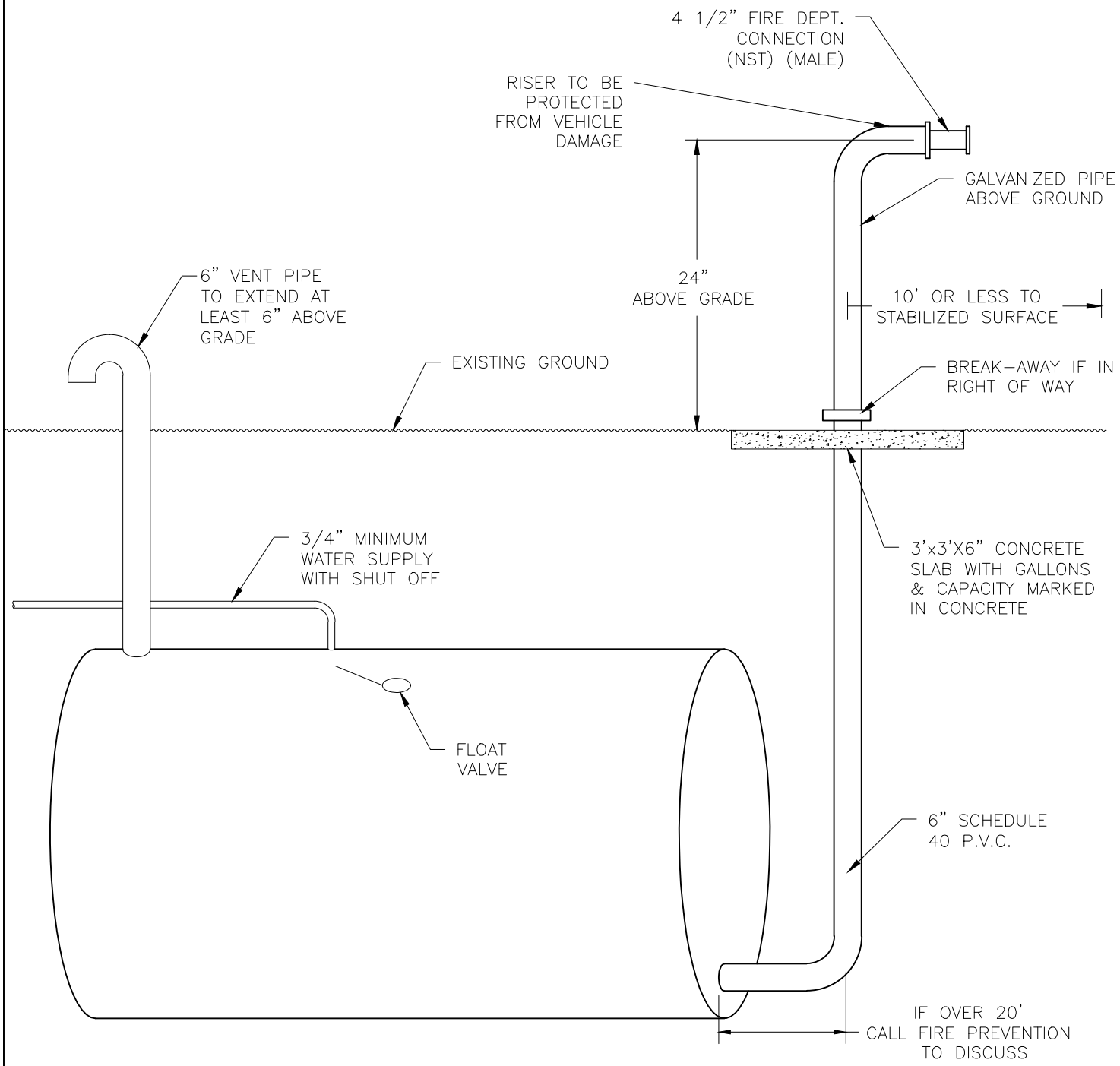

- IF MULTIPLE TANKS ARE REQUIRED, THEY MUST BE MANIFOLDED TOGETHER INTO A SINGLE RISER.
- RISER SHALL BE A MINIMUM OF 1.5 X BUILDING HEIGHT AWAY FROM BUILDING HOWEVER, IT IS OFTEN AN ADVANTAGE FOR PROPERTY OWNERS AND THE FIRE DEPARTMENT TO HAVE RISER INSTALLED A SIGNIFICANT DISTANCE AWAY FROM BUILDING (UP TO 100').
- TO DETERMINE THE BEST LOCATION OF THE FIRE DEPARTMENT CONNECTION YOU MUST CONTACT MARION COUNTY FIRE RESCUE.

TYPICAL OF SINGLE TANK SYSTEM

IT IS THE RESPONSIBILITY OF THE SYSTEM DESIGNER TO ENSURE FUNCTIONALITY, AND OWNER'S RESPONSIBILITY TO MAINTAIN.

Marion County FLORIDA FIRE RESCUE	MCBCC ADOPTED XX/XX/XX REVISION #	DRY HYDRANT DETAIL	7 FR 001

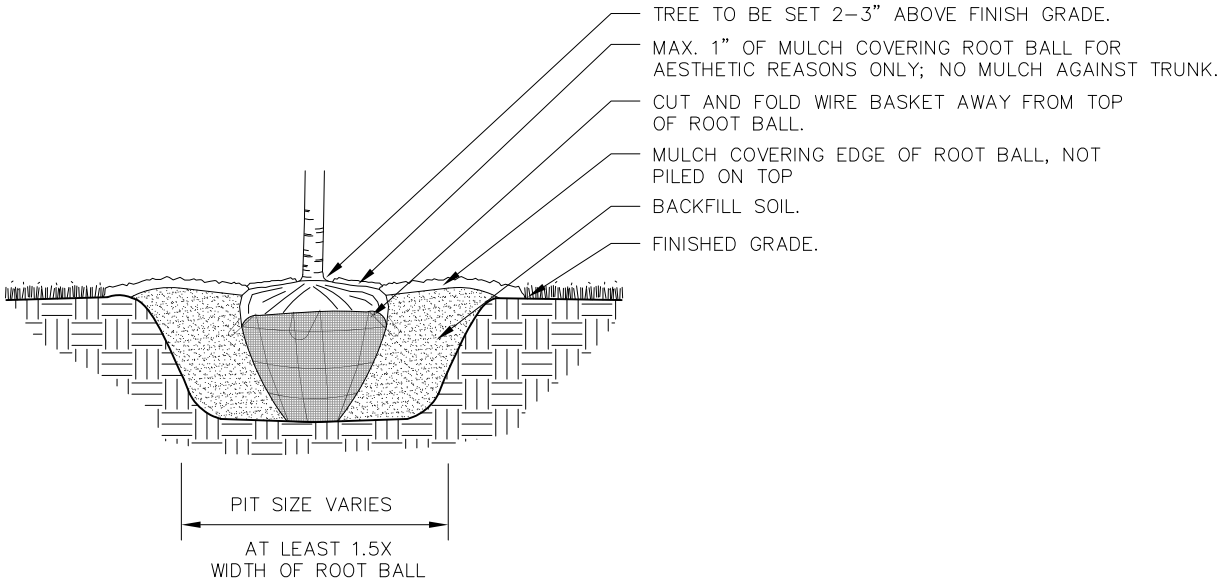

TREE PLANTING PIT DETAIL
(BALLED AND BURLAPPED)

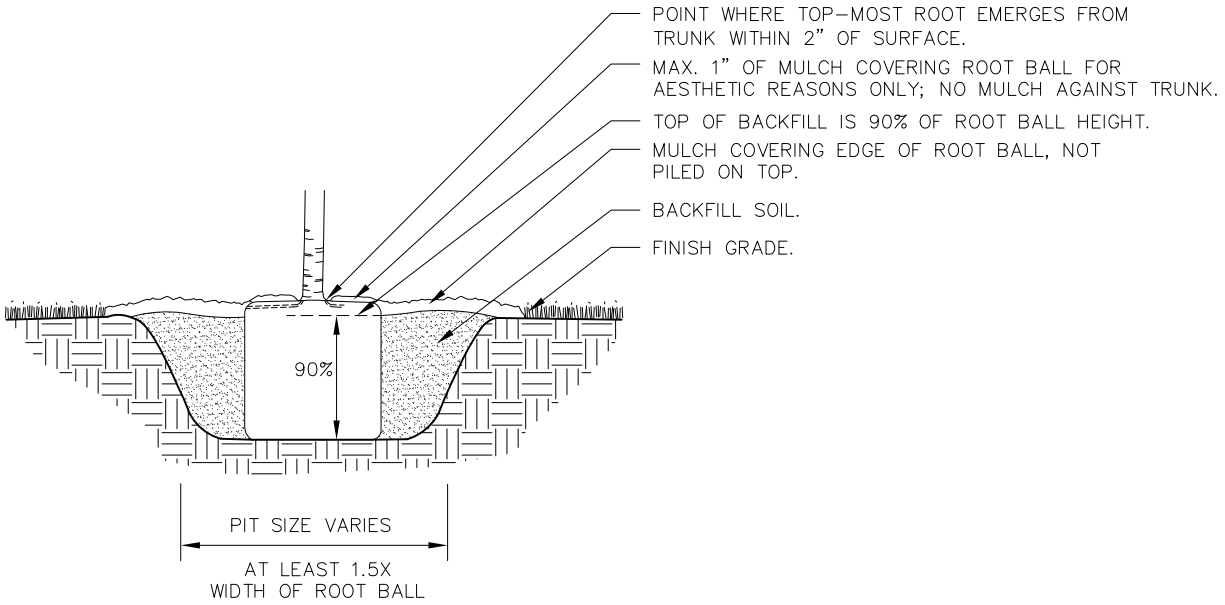

TREE PLANTING PIT DETAIL
(CONTAINER GROWN)

NOTES:

1. REMOVE ALL SYNTHETIC MATERIALS INCLUDING STRAPS, STRINGS, AND SYNTHETIC BURLAP. NATURAL BURLAP MAY BE LEFT IN PLACE.
2. ALL ROOT SYSTEMS SHALL BE REASONABLY FREE OF ROOT DEFECTS INCLUDING:
   A. POTENTIALLY STEM–GIRDLING ROOTS ABOVE THE ROOT COLLAR AND MAIN STRUCTURAL ROOTS,
   B. VERTICAL ROOTS, AND
   C. KINKED ROOTS.
3. BACKFILL SOIL SHALL BE NATIVE SOIL REMOVED FROM PIT FREE OF ROCKS, STICKS AND OTHER DELETERIOUS SOILS. WATER–IN AND LIGHTGHTLY COMPACT BACKFILL TO REMOVE AIR POCKETS.
4. MULCH OR SOIL BERMS ARE NOT REQUIRED UNLESS TREE IS WATERED BY HOSE, BUCKET OR OTHER HIGH VOLUME METHOD.

Marion County FLORIDA PARKS AND RECREATION	MCBCC ADOPTED XX/XX/XX	TREE PLANTING PIT	7
	REVISION #		LS 001

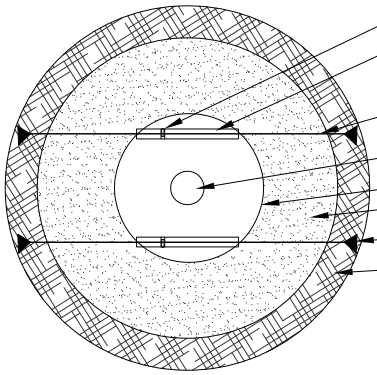

PLAN VIEW

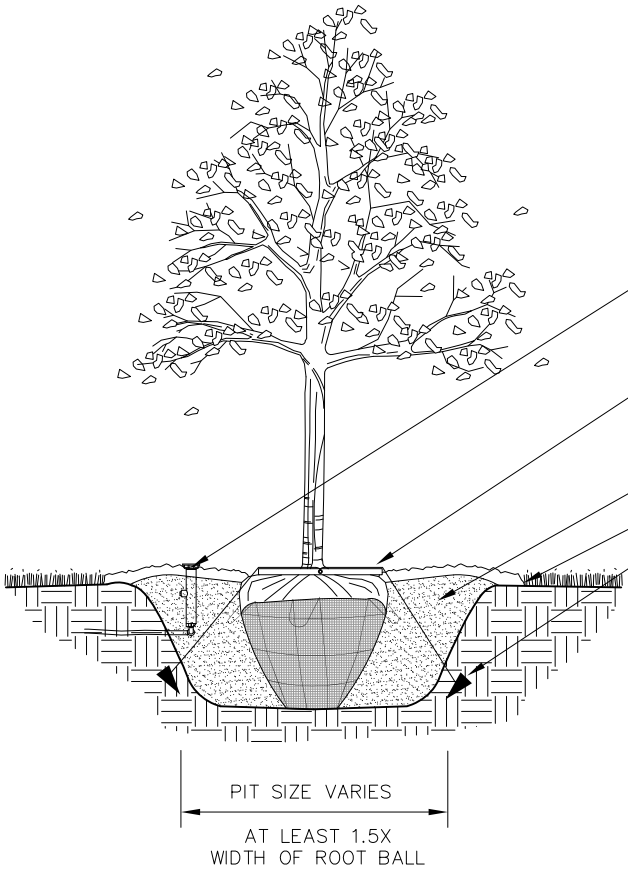

TREE INSTALLATION WITH ROOT BALL KIT

(TREES OVER 10' HEIGHT AT INSTALLATION AND WITHIN PUBLICLY USED AREAS)

SET TREE AND APPLY MULCH PER TREE PLANTING PIT DETAIL

Marion County FLORIDA PARKS AND RECREATION	MCBCC ADOPTED XX/XX/XX	TREE INSTALLATION ROOT BALL KIT	7
	REVISION #		LS 002

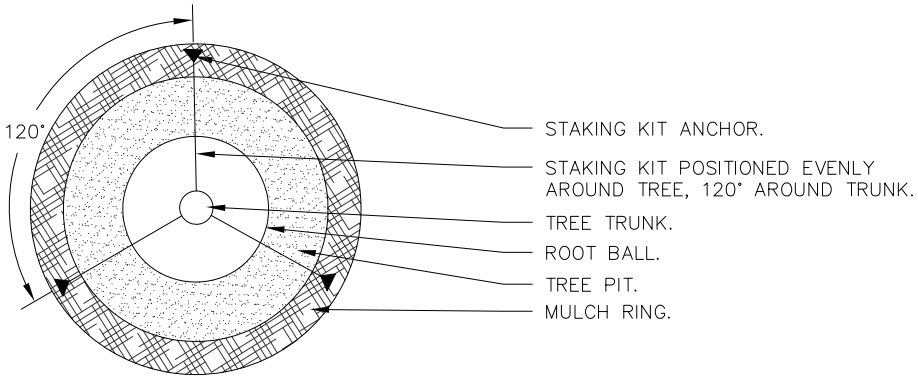

PLAN VIEW

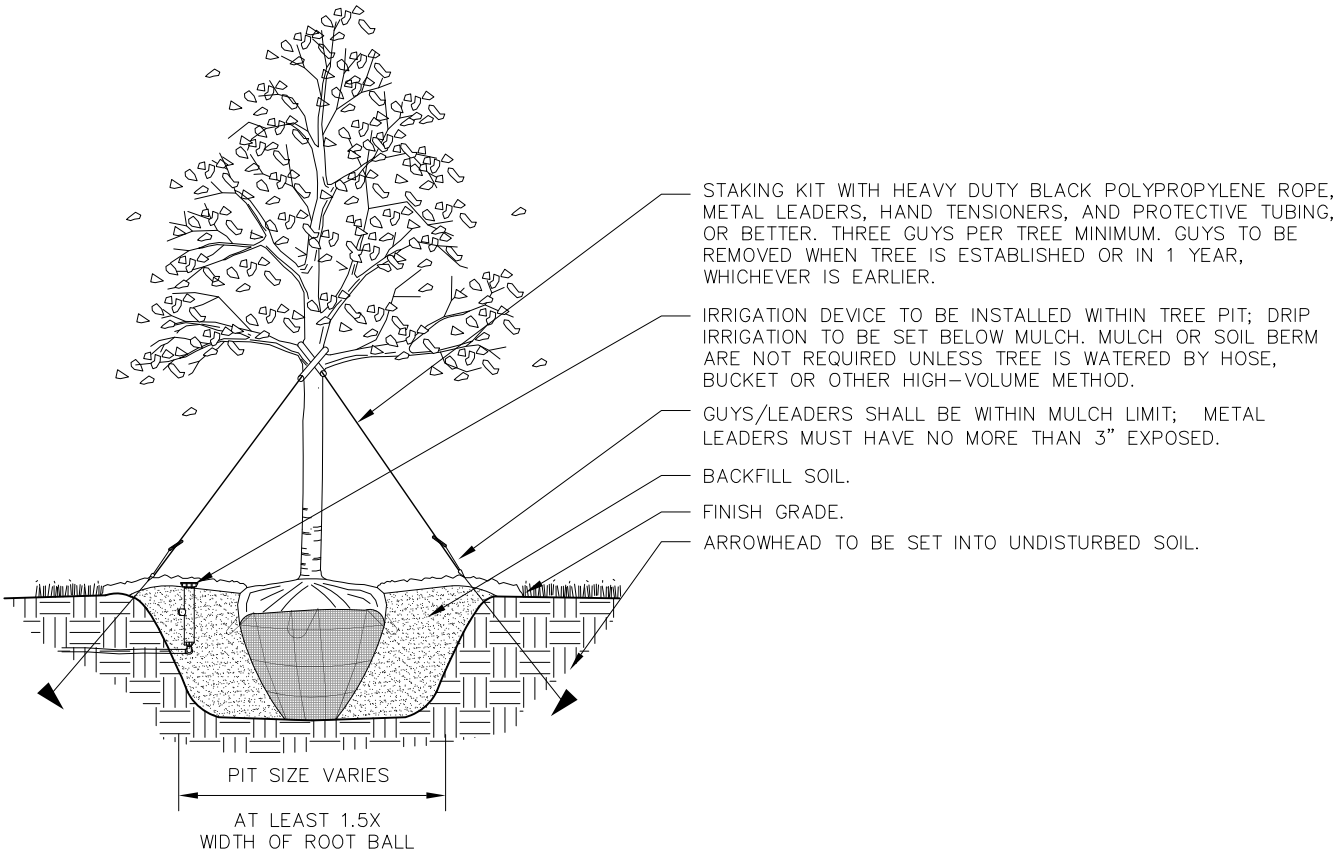

TREE INSTALLATION WITH STAKING KIT

(TREES OVER 10' HEIGHT AT INSTALLATION AND AWAY FROM PUBLICLY USED AREAS)

SET TREE AND APPLY MULCH PER TREE PIT DETAIL

Marion County FLORIDA PARKS AND RECREATION	MCBCC ADOPTED XX/XX/XX	TREE INSTALLATION GUYING KIT	7
	REVISION #		LS 003

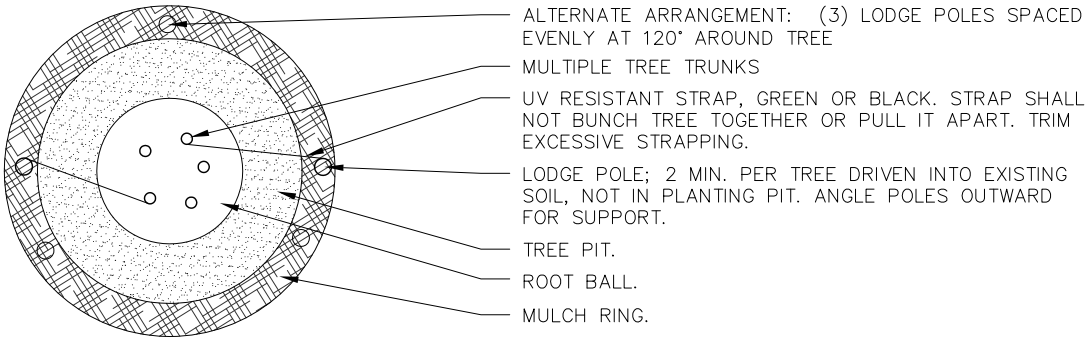

PLAN VIEW

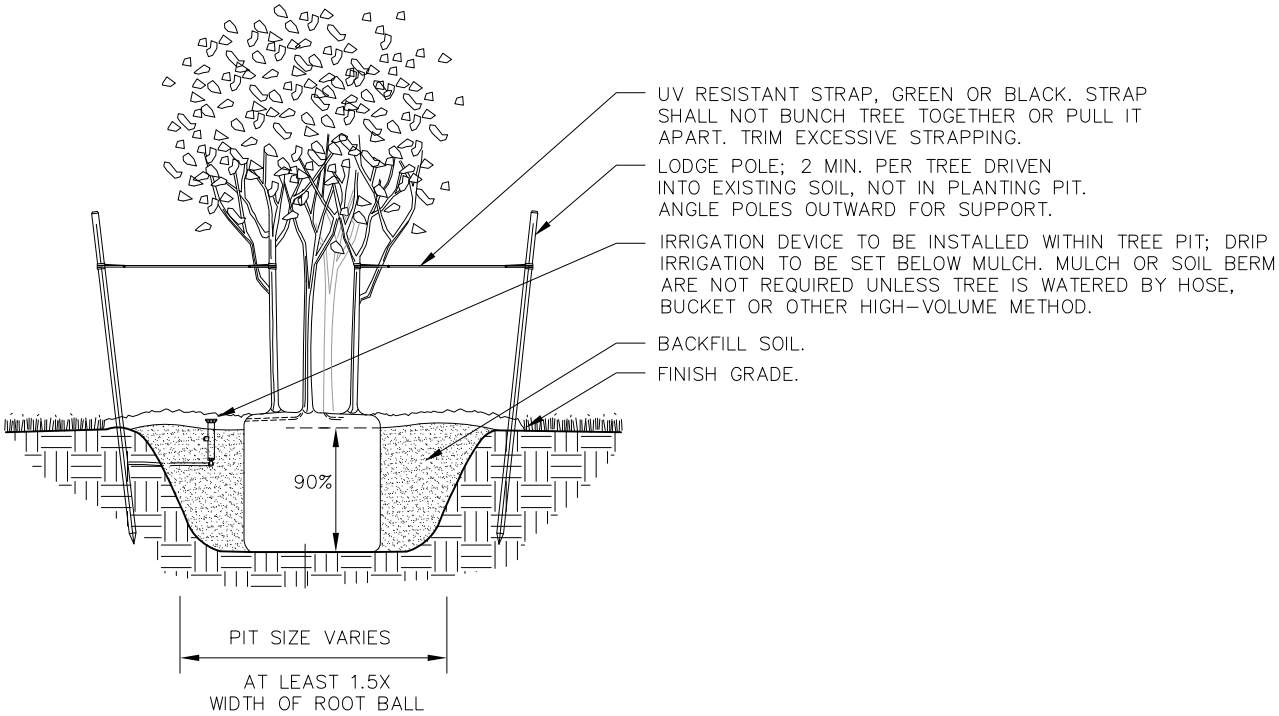

TREE INSTALLATION WITH LODGE POLES

(TREES UNDER 10' HEIGHT AT INSTALLATION)

SET TREE AND APPLY MULCH PER TREE PIT DETAIL

Marion County FLORIDA PARKS AND RECREATION	MCBCC ADOPTED XX/XX/XX	TREE INSTALLATION LODGE POLES	7
	REVISION #		LS 004

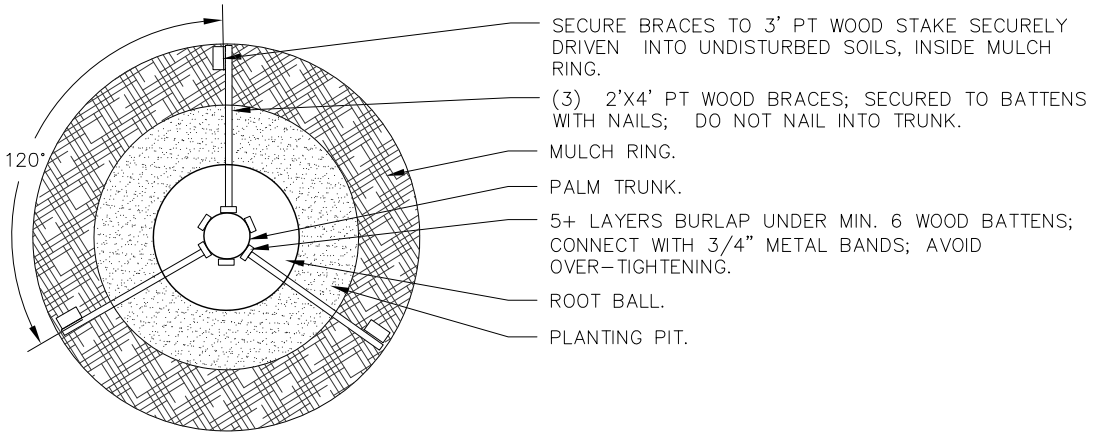

PLAN VIEW

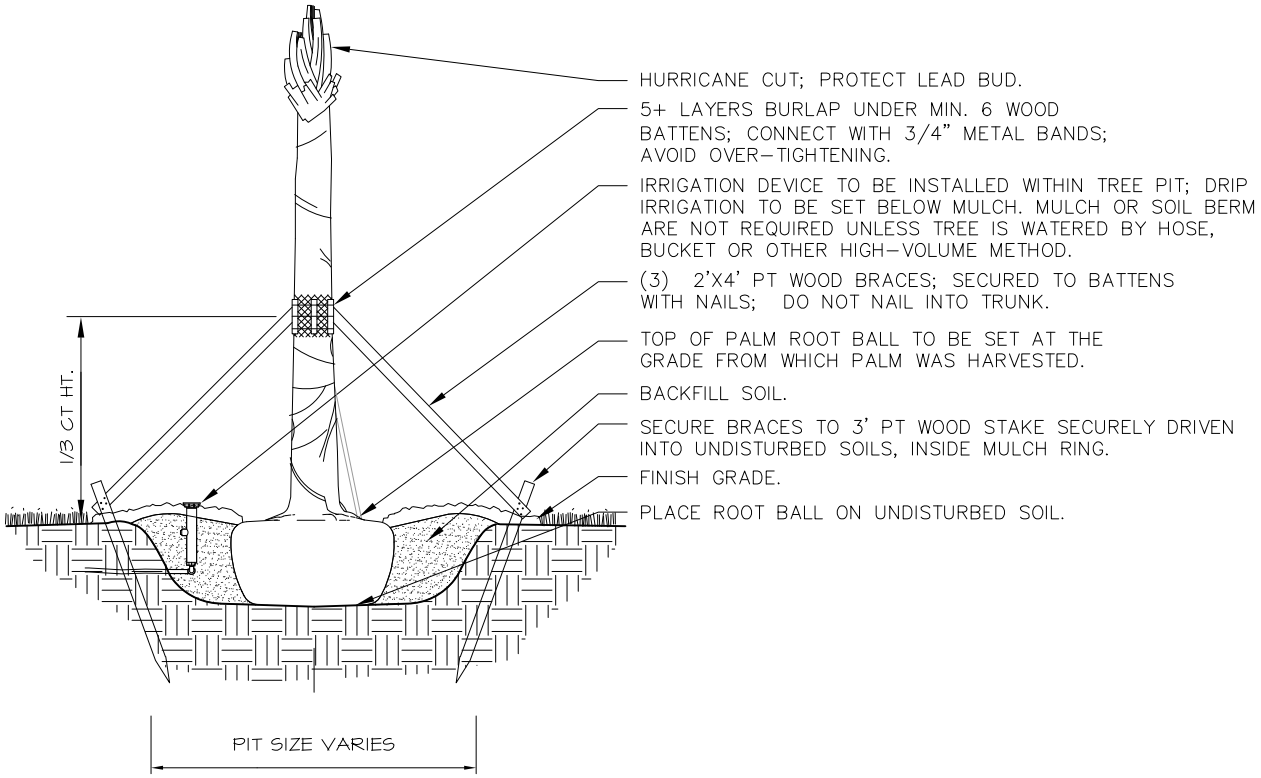

PALM INSTALLATION WITH BATTEN KIT

Marion County FLORIDA PARKS AND RECREATION	MCBCC ADOPTED XX/XX/XX	PALM INSTALLATION	7
	REVISION #		LS 005

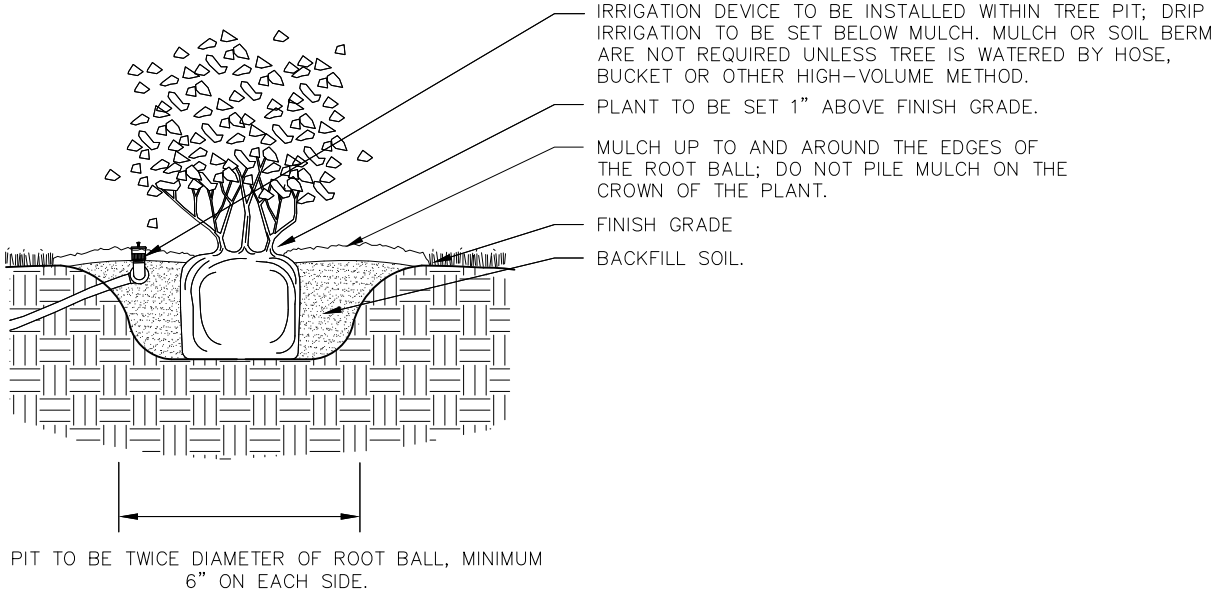

SHRUB INSTALLATION

Marion County FLORIDA PARKS AND RECREATION	MCBCC ADOPTED XX/XX/XX	SHRUB INSTALLATION	7
	REVISION #		LS 006

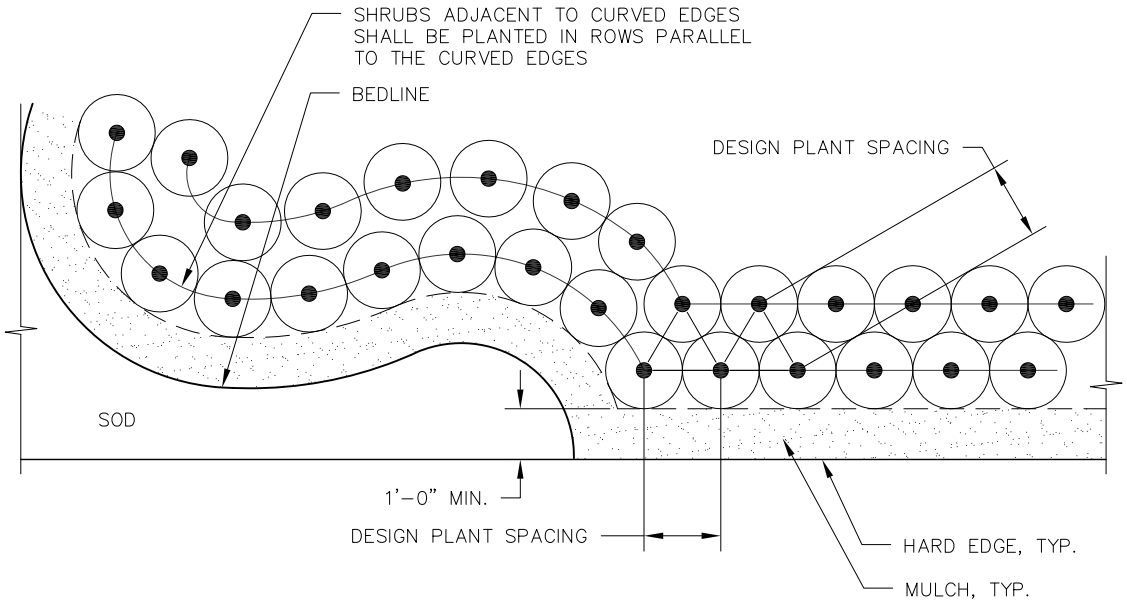

PLANT MASSING LAYOUT

Marion County FLORIDA PARKS AND RECREATION	MCBCC ADOPTED XX/XX/XX	SHRUB MASSING	7
	REVISION #		LS 007

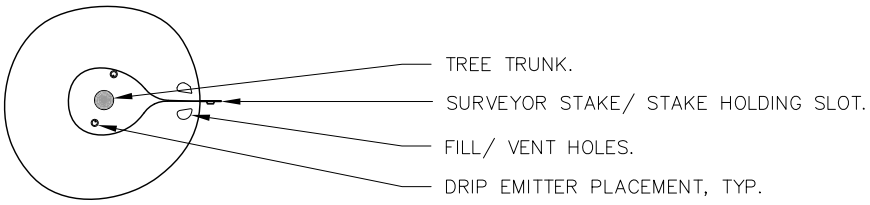

TOP VIEW
(SHOWN WITH TREE CANOPY REMOVED FOR CLARITY)

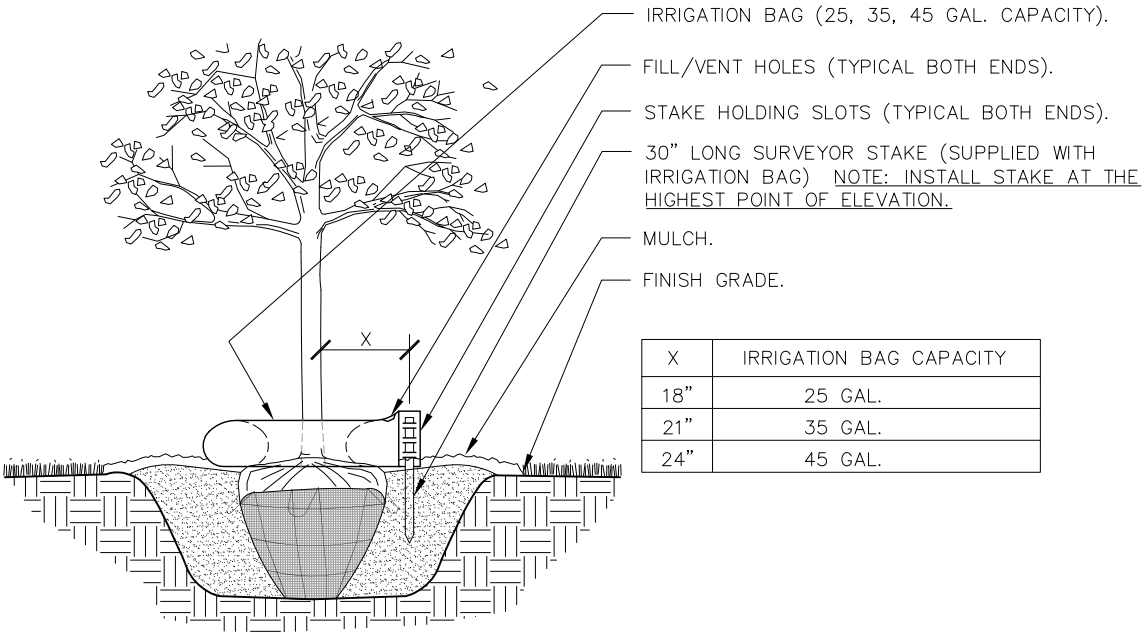

X	IRRIGATION BAG CAPACITY
18"	25 GAL.
21"	35 GAL.
24"	45 GAL.

IRRIGATION BAG INSTALLATION

SET TREE AND APPLY MULCH PER TREE PIT DETAIL.
SECURE TREE/PALM BY APPROPRIATE DETAIL.

Marion County FLORIDA PARKS AND RECREATION	MCBCC ADOPTED XX/XX/XX	TREE IRRIGATION BAG	7
	REVISION #		LS 008

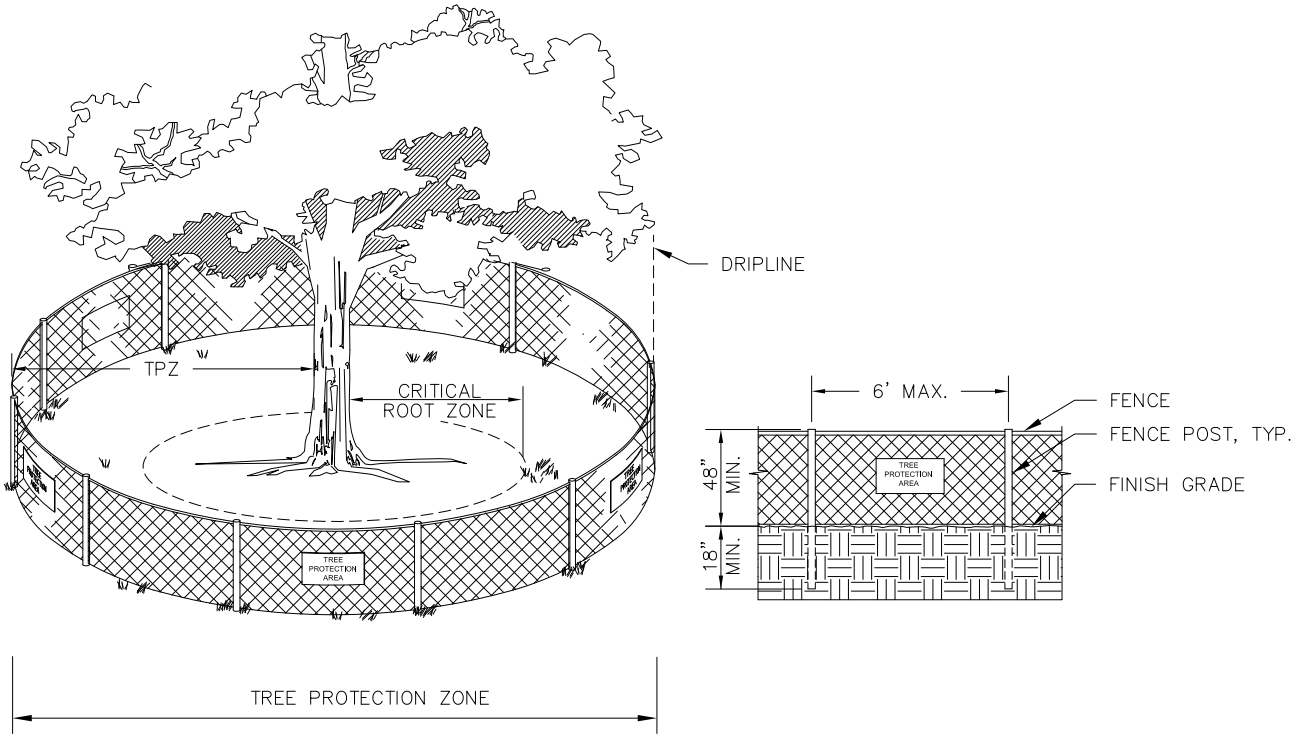

TREE PROTECTION DETAIL

NOTES:

1. TREE PROTECTION BARRICADES SHALL BE INSTALLED AROUND ALL PROTECTED TREES AND GROUPS OF TREES PRIOR TO ANY CLEARING OR GRADING OPERATIONS, INCLUDING THE REMOVAL OF OTHER TREES.
2. FOR LARGE GROUPS OF TREES, BARRICADES MAY BE PLACED BETWEEN THE PROTECTED TREES AND THE CONSTRUCTION ACTIVITY AREA.
3. BARRICADES SHALL BE MADE OF RIGID MATERIAL CAPABLE OF SURVIVING FOR THE DURATION OF THE CONSTRUCTION.
4. BARRICADES SHALL BE INSPECTED WEEKLY DURING THE DURATION OF CONSTRUCTION AND REPAIRED/REINSTALLED AS REQUIRED.
5. CLEANING OF EQUIPMENT OR MATERIAL OR THE DISPOSAL OF WASTE MATERIALS, INCLUDING BUT NOT LIMITED TO, PAINT, OIL, SOLVENT, ASPHALT, CONCRETE, AND MORTAR WITHIN THE TREE PROTECTION ZONE (TPZ) OF ANY TREE IS NOT ALLOWED.
6. THE MOVEMENT OF EQUIPMENT OR STORAGE OF EQUIPMENT, MATERIALS, DEBRIS, OR FILL WITHIN THE TPZ OF ANY TREE IS NOT ALLOWED.
7. IF ANY TREE WHICH IS NOT PERMITTED FOR REMOVAL IS DESTROYED, OR RECEIVES MAJOR DAMAGE DURING CONSTRUCTION, WITH THE EXCEPTION OF NATURAL EVENTS, SO AS TO PLACE ITS LONG TERM SURVIVAL IN QUESTION, MUST BE REPLACED WITH A COMPARABLE TYPE OF TREE HAVING A TOTAL (INCH–TO–INCH) DBH OF THE TREE(S) SO DESTROYED OR DAMAGED.

Marion County FLORIDA PARKS AND RECREATION	MCBCC ADOPTED XX/XX/XX	TREE PROTECTION	7
	REVISION #		LS 009