Article 7 Construction Specifications and Design Details

Division 1 Roadway and Drainage Construction Specifications

Sec. 7.1.1 General conditions.

A. The regulations of this section control the requirements under which subdivision improvements and work in public and/or private right-of-way and other specified areas are to be permitted and constructed.

B. Any work proposed to be constructed in the right-of-way shall be reviewed and approved by the Office of the County Engineer through the applicable process established in Article 2 of this Code.

C. Maintenance of Traffic (MOT) plans shall be provided for review and approval prior to work commencing in the right-of-way. MOT shall adhere to the FDOT Design Standards and/or Manual on Uniform Traffic Control Devices (MUTCD), as applicable.

D. Any contractor performing work in a public or private right-of-way, or associated easements, shall be registered with the County through the Office of the County Engineer. Registration is to minimally demonstrate qualifications, certifications and insurance coverage in applicable areas that work is being performed.

E. The requirements herein are intended to be complete only to the extent of protection of the public interest. It should be noted that private road subdivision construction must also meet the minimum standards contained in the Code in order to provide reasonable assurance to the public that the improvements are not sub-standard and do not create an undue burden of maintenance expense on the private road subdivision residents.

F. The requirements included herein are considered only as the minimum standards. All proposed construction must be designed with full consideration given to the performance, functionality, structural suitability and durability, and regulatory compliance of the particular installation.

G. Construction details are provided in this Article and illustrate construction requirements of this Code.

H. The construction details provided herein are generally applicable to all construction, however the County Engineer may approve or require minor variations or adjustments to fit particular circumstances. Additionally, the project engineer may submit revisions to said detail(s) provided the detail is clearly shown within a ‘cloud’.

I. The use of the term "or equal" shall also be interpreted to include the term "approved equivalent".

J. Unless otherwise specified, construction work shall conform to the technical provisions of the most recent version of Sections 100 to 900 of the FDOT Standard Specifications for Road and Bridge Construction as well as the most recent version of the FDOT Design Standards.

Sec. 7.1.2 Applicable documents.

Publications, codes, and specifications as hereinafter listed and referenced throughout these specifications are a part of these specifications to the extent of such reference. Reference is intended to refer to the latest revision or publication which has been officially adopted by the issuing agency. The term "State Road Department" when used in applicable sections of the FDOT Standard Specifications shall be interpreted to mean the Marion County Office of the County Engineer. References to payment methods and payment measurements therein are deleted. The latest edition of the following publications, unless otherwise specified, shall apply:

American Association of State Highway and Transportation Officials (AASHTO)

American Concrete Institute (ACI)

American Iron and Steel Institute (AISI)

American Society for Testing and Materials (ASTM)

Florida Department of Transportation (FDOT)

Standard Specifications for Road and Bridge Construction

Design Standards

Drainage Manual

Florida Method of Test for Moisture-Density Relations of Soils, Designation: FM 1 T-180

Manual on Traffic Control and Safe Practices for Street and Highway Construction, Maintenance and Utility Operations

Manual of Uniform Minimum Standards for Design, Construction and Maintenance for Streets and Highways (Greenbook)

Site Impact Handbook

Institute of Transportation Engineers Trip Generation Rate

Manual on Uniform Traffic Control Devices (MUTCD)

Water Management Districts

Southwest Florida Water Management District permitting documentation

St. Johns River Water Management District permitting documentation

Sec. 7.1.3 Construction specifications.

A. Improvements in the right-of-way, drainage easements, utility easements, subdivisions, and other areas being developed shall be provided in accordance with the details provided herein, the approved plans, and the listed publications, codes, and specifications, as applicable. Construction of public facilities and infrastructure shall not be accepted for the public maintenance unless it conforms to the provisions herein.

B. Changes to the work. No change to the work as shown on the approved plans shall be made without notification to and approval by the Office of the County Engineer.

C. Use of roads during construction. Roads being used by the public at the commencement of construction which provide the only ingress and egress shall be maintained in a passable condition. Should an alternate route be contemplated, it must be reviewed and approved by the Office of the County Engineer. All haul routes for construction purposes shall be reviewed and approved by the Office of the County Engineer. Existing county roads damaged during construction which lie between the subdivision under construction and the nearest collector/arterial road as designated on the approved haul route, shall be subject to maintenance and repair by the developer.

D. Location of utilities in public rights-of-way shall conform to those locations and burial depths shown in the details provided herein or as per this Code unless it can be shown that extenuating circumstances make it impossible or impractical to conform. All aerial utilities shall be a minimum height of 18 feet above centerline grade of roadway. If extenuating circumstances exist, communication and cable T.V. lines shall have 16 foot minimum vertical clearance. Utility companies are required to locate facilities within 48 hours of notice in County rights-of-way for design or construction purposes at no cost. The outside edge of all poles and above ground equipment shall be placed tangent to the right-of-way line or in an easement. As-built/record drawings shall be submitted at the completion of all utility work, certified as to horizontal and vertical location within the right-of-way. For purposes of this Section the term utility shall include, but not be limited to, cable television.

(1) Underground utilities placed under existing or proposed pavement shall be sleeved unless constructed of ductile iron or C-900 PVC main lines with mechanically restrained joints or as authorized by the County Engineer. Utility sleeves shall extend a minimum of eight feet from the edge of the pavement toward the right-of-way lines.

(2) Utility sleeves, and carrier pipes for jack and bore operations, shall be constructed and installed in accordance with the details provided herein with the exception that where the nature of a particular utility is such that skids or braces are not necessary for a smooth and level installation. In this instance, said skids or braces may be eliminated and smaller diameter sleeves may be used, such as in the case of cable television, telephone, electric, natural gas, and water service lines.

(3) Jacking and boring of pipe under existing pavement is required. No jetting of pipe is permitted. Pavement cuts may be permitted subject to approval of the County Engineer as per the applicable sections of these specifications. Jacking and boring shall meet the requirements of Section 556 of the FDOT Standard Specifications.

(4) Cable for television, telephone, and electric may be placed directly into the sleeve and do not require a separate conduit. Additional empty sleeves may be installed to allow for future utility replacement or expansion by any utility company desiring to do so.

(5) Any costs associated with the installation of any sleeves shall be borne solely by the utility company or permit holder.

E. Driveways in public or private rights-of-way shall conform to details provided herein, and shall be constructed in accordance with the permit issued for construction or the approved plans. It is the applicant's responsibility to maintain the flow line of the swale and/or culvert unless specified otherwise on the permit or improvement plan for the subdivision. Driveways shall be constructed so as not to cause damage to the public road to which it connects, or interfere with or divert storm drainage, or create an unsafe traffic condition. If head walls are to be constructed in lieu of mitered end cuts on culvert pipe, they shall not extend vertically above the finish grade of the driveway. Headwalls are not permitted on roads with speed limit above 40 MPH. Headwall plans must be submitted along with the driveway permit application (or prior to commencement of construction) and the permit must be issued prior to commencement of construction. Driveways and associated features, including but not limited to culverts, mitered end sections, headwalls, etc., are the responsibility of the property owner and shall be maintained in a functional and safe condition.

F. Clearing and grubbing.

(1) Clearing and grubbing shall include the removal and proper disposal of, or portions thereof, all timber, brush, stumps, roots, grass, weeds and other such obstructions, above and to a depth of two feet below the finish grade in road rights-of-way, drainage retention areas, drainage rights-of-way, and other specified areas. Stumps shall be removed in their entirety from underneath the proposed roadway. This provision shall not apply to drainage retention areas if the project engineer designs the drainage system to accommodate the design storm without removal of existing trees.

(2) Disposal shall include the complete removal from rights-of way and other specified areas of the debris and unsatisfactory soils resulting from clearing and grubbing. Debris material shall not be buried onsite. Burning of combustible materials shall be permitted subject to approval of all governing agencies having jurisdiction. When burning, all materials must be burned to a negligible ash and the ash shall be removed from the site.

G. Earthwork.

(1) Earthwork including excavation, filling and backfilling, shall conform to the details provided herein and the approved plans.

(2) Selection and placement of fill and backfill materials shall be in accordance to FDOT Standard Specifications Section 120. Satisfactory materials must be used within four feet (horizontally and vertically) of the proposed road surface. Fill and backfill shall be placed in lifts of 12 inches, or less, when located within four feet of roadways and stabilized access and within one foot of the outer pipe wall. Each layer shall be compacted and tested in accordance with the quality control provisions in the specifications. Flowable fill may be used in accordance with FDOT Standard Specifications.

(3) Unsatisfactory soils. For roadways, unsatisfactory soils are defined as Types P, H, or M in Section 505 of the FDOT Design Standards and shall be addressed accordingly. For DRAs and the drainage system the handling of subsurface soils are to be addressed in accordance with the approved plans. Other means of stabilization utilizing surcharge, chemical or synthetic fabrics may be proposed by the project engineer subject to approval of the Office of the County Engineer. For roadways, all rocks greater than six inches in diameter shall be removed to a depth of six inches below the bottom of the stabilized subgrade.

H. Roads.

(1) Material.

(a) Material of stabilizing subgrade or roadway shall be Type B, conforming to Sections 911, 912 (FDOT 2000 Standard Specifications), 913, 913A and/or 914 of the FDOT Standard Specifications, as applicable.

(b) Material for base course shall be as specified. Material shall conform to Sections 911 - 914 of the FDOT Standard Specifications.

(c) Bituminous materials shall conform to FDOT Standard Specifications.

(d) Sand for prime coat material shall conform to FDOT Standard Specifications and shall be clean dry sand, free of sticks, trash, roots, and other organic materials. Sand shall have a plastic index less than four and shall be free of silt and rock particles or clay balls larger than one fourth inch in size.

(e) Asphaltic concrete material for surface course shall conform to applicable sections of the FDOT Standard Specifications.

(2) Construction.

(a) Subgrade construction shall be compacted to a thickness of not less than 12 inches.

(b) Limerock base course shall conform to the FDOT Standard Specifications and shall be a thickness of not less than eight inches.

(c) Prime and tack coats shall conform to the FDOT Standard Specifications. All finished limerock base courses shall be primed and sanded in conformance to FDOT Standard Specifications immediately following the application of prime materials.

(d) Asphaltic concrete surface course shall conform to provisions of the FDOT Standard Specifications which apply to asphaltic concrete. Compacted thickness of surface course shall not be less than one and one-quarter inches for residential roads and one and one-half inches for collector and arterial roads. Greater thickness may be required if high traffic volume is anticipated.

I. Road shoulders.

(1) Stabilized shoulder construction is required adjacent to all paved and stabilized roadways.

(2) Materials for stabilizing shoulder shall be Type B conforming to the FDOT Standard Specifications.

(3) Where stabilized shoulders are to be constructed the surface shall be brought to the required grade as depicted in the plan, profile and cross sections. Stabilizing shall be Type B stabilization conforming to the FDOT Standard Specifications. Stabilizing material shall be placed and mixed in one layer and compacted to a thickness of not less than six inches.

J. Drainage facilities.

(1) Pipe size and materials.

(a) Drainage pipes shall be a minimum of (a) 15 inches for residential and commercial driveways and (b) 18 inches in diameter for all other stormwater systems within a right-of-way or easement associated with the right-of-way.

(b) The use of reinforced concrete pipe shall conform to FDOT Standard Specifications. Other pipe material may be allowed if on the FDOT Qualified Products List (QPL), and with the approval of the County Engineer. For projects that are to be maintained by the County, justification for use of material other than reinforced concrete pipe shall include, but not be limited to data and values of water levels, soil conditions, resistivity, pH, chlorides and sulfates. For County projects, a value engineering proposal shall be provided with the justifications for the use of other than reinforced concrete pipe.

(c) Headwalls and tailwalls for culverts and storm drain shall be manufactured steel end sections or rip rap or concrete structures in accordance with index numbers 250 through 268 of the FDOT Road Design Standards Manual. Culverts with mitered or flared end sections may be used if designed in accordance with Index numbers 270 through 273 of the FDOT Road Design Standards Manual. Concrete mitered end sections are required for culverts, cross drains and side drains when within a County right-of-way with posted speeds of 40 mph or greater. Construction shall conform to FDOT Standard Specifications.

(d) Manholes, inlets and junction boxes shall be of pre-cast reinforced concrete, cast-in-place reinforced concrete or of brick masonry conforming to FDOT Standard Specifications as applicable.

1. Manholes shall be located at the end of each run; at all changes in grade, size or direction; and at distances no greater than that indicated in the FDOT Drainage Manual.
2. Brick for masonry construction shall be concrete brick or masonry units conforming to ASTM Specification C55 Grade S-II or Sections 425 and 949 of FDOT Standard Specifications.
3. Mortar for masonry construction shall conform to Section 425 of FDOT Standard Specifications.
4. Concrete for cast-in-place and pre-cast structures shall conform to the requirements of Section 425 of the FDOT Standard Specifications.
5. Reinforcing the cast-in-place or pre-cast concrete structures shall be grade 40 conforming to Section 415 of the FDOT Standard Specifications.
6. Pre-cast structures shall be subject to approval of design materials and fabrication details submitted prior to installation.
7. Frames, grates and covers shall be of cast iron for installation where flush with the adjacent grade and subject to vehicular loads. Cast iron covers for manholes shall be designed for traffic bearing and shall weigh not less than 130 pounds. Covers shall have raised integral cast letters indicating "Sanitary", "Storm", "Electric", "Telephone", or similar lettering explaining the use and purpose of structure. Cast iron grates for inlets shall be designed for traffic bearing and shall have sufficient open area to pass the calculated maximum stormwater surface flow. No opening shall be greater than one inch in least dimension with lesser openings used where pedestrian safety is a consideration.

Steel grates for inlets may be used in certain cases where approved by the Office of the County Engineer.

8. Copies of the shop drawings, approved by the Engineer of Record, shall be submitted to the Office of the County Engineer for all County projects and publicly dedicated improvements. Any changes from the approved design shall be clearly indicated on the shop drawings and shown within a 'cloud'.

(2) Construction shall conform to Section 430 of the FDOT Standard Specifications. Pipe shall be laid to invert elevation indicated on the approved plans. Joints shall be made according to the manufacturer's printed instructions. Damage to protective bituminous coatings shall be repaired. Minimum burial depth of all utilities shall comply with the details provided herein. All drainage pipes shall have no less than one foot of cover with the exception of when a saddle is used per the detail provided herein.

(3) Retention/detention areas. The in situ material below and within retention/detention areas shall not be excavated beyond the limits of the grades and elevations as indicated on the plans without the approval of the Office of the County Engineer.

K. Grading.

(1) Grading for construction of roads, utilities and drainage facilities shall conform to the requirements herein, as well as Section 120 of the FDOT Standard Specifications.

(2) Rough grading prior to construction shall bring the entire project area to the approximate finish grade or interim grade as specified on the approved plan. The subgrade shall be properly drained to insure stability prior to proceeding with construction.

(3) Finish grading. Earth surfaces for the project area, including but not limited to road rights-of-way, drainage swales and retention areas, shall be brought to the elevations shown on the approved plans with a smooth surface ready for grassing or other designated vegetative cover. Areas around culverts, headwalls and tailwalls shall be graded to a neat and finished appearance. After completion of the installation of underground facilities, the surface shall be brought to the elevations shown on the approved plans. When utilities are installed in areas where no surface construction is proposed, the surface shall be restored to its original or better condition.

L. Fencing.

(1) Fencing shall conform to the requirements herein and shall be Type B fencing per Section 550 of the FDOT Standard Specifications. The use of other fencing type must be approved by the County Engineer.

(2) Fences shall be constructed six inches inside the property line of drainage retention areas and other dedicated public areas, unless otherwise specified on the approved plans.

(3) Fence posts shall be set in concrete to the dimensions shown in the details provided herein. Each post shall be capped.

(4) Gates shall be constructed where shown on the plan, shall be double hung, and shall produce a clear 20 foot wide opening.

M. Traffic signs.

(1) This section includes street name signs, traffic regulatory signs, directional signs, warning signs, delineators, temporary signs, barricades and warning devices.

(2) Traffic regulatory and warning signs shall conform to the requirements for conventional roads in the MUTCD.

(3) Temporary signs, barricades, and warning devices advising the public of hazardous conditions or construction in progress shall conform to the requirement of the MUTCD. Appropriate signs, barricades and/or warning devices are required for all hazardous construction including all utility installations, and must be on site before commencement of construction.

(4) Materials.

(a) Street name signs shall be produced from blanks of aluminum alloy 6061-T6 conforming to ASTM Specifications B209 treated with Alodine 1200, Iridite 14.2, or Bonderite 721 prior to application of sheeting. Blanks shall be 0.080 inches thick and nine inches high by either 24, 30, or 36 inches in width as required to accommodate the sign message. Corners shall be rounded. For public or county maintained roads, letters or legend shall be six inches high, white high intensity reflective sheeting, on a green transparent film background with white 1/2 inch thick high intensity reflective border. For private or non-county maintained roads, letters or legend shall be six inch high, green high intensity reflective sheeting, on a white transparent film background with green 1/2 inch thick high intensity reflective border.

(b) Posts for traffic signs shall be 2” square posts weighing not less than four pounds per lineal foot. Post shall be perforated on the mounting flange with 5/16 inch holes spaced at one inch centers beginning at one end of the post and providing no less than 60 holes. Mounting height shall not be less than seven feet to bottom of the sign face, or in accordance with the details herein.

(c) Delineators are required on each end of cross drain culverts (except those with flush inlets). They shall be Type 2, four inches x eight inches, amber reflectors mounted on both sides of the post and conform to the FDOT Standard Specifications. Posts shall be a minimum of six feet long galvanized "U" channel weighing not less than two pounds per lineal foot. Post shall be perforated on the mounting flange with 5/16 inch holes spaced at one inch centers beginning at one end of the post and providing no less than 48 holes. Reflective faces shall face traffic and top of delineator shall be no less than four feet, and not more than five feet above finished grade. Post shall be buried to a depth no less than 18 inches below grade.

(d) Fasteners. Bolts and nuts for securing sign faces to posts shall be Class "A" conforming to ASTM Specification A307. Bolts, nuts and flat washers shall be galvanized conforming to ASTM Specification A123 or cadmium.

(5) Installation.

(a) Sign posts shall be set to the minimum depth indicated and checked for vertical alignment. Post shall plumb and not be off vertical by more than five degrees.

(b) Fasteners shall be securely installed using specified hardware. Galvanized or cadmium plated flat washers shall be used behind each nut and bolt head.

(c) Speed limit signs shall not be erected until the Board has established the legal speed limit, based on the project engineer's speed study and recommendation as required in Article 6 of this Code.

(d) Temporary signs, barricades and warning devices shall be installed and used in accordance with the requirements of the MUTCD and FDOT Design Standards.

(6) Private road subdivisions may substitute more aesthetically pleasing sign materials upon approval of the County Engineer.

N. Pavement markings.

(1) This section includes reflective paint and thermoplastic pavement markings for traffic control.

(2) Materials.

(a) Traffic paint for pavement markings shall conform to subsections 971-12.2 and 971.12.3 of the FDOT Standard Specifications.

(b) Glass spheres for reflective traffic paint shall be a Type I and Type 4 double drop application and conform to subsections 971-13.1 and 971-13.2 and 971-13.8 of the FDOT Standard Specifications. Six pounds per gallon of Type 1 glass spheres and eight pounds per gallon of Type 4 glass spheres shall be applied during the paint applications.

(c) Thermoplastic striping conforming to Section 711 of FDOT Standard Specifications is required within the County right-of-way, unless otherwise excepted.

(3) Installation.

(a) The work shall conform to Sections 710-3.1 through 710-6.5 inclusive and Section 710-6.8 through 710-6.10 inclusive of the FDOT Standard Specifications. The rate of application shall be 40 gallons per mile for six inch wide painted stripes and three linear feet per pound for thermoplastic applications. Six inch wide stripes shall be used in all instances except for stop bars which shall be 24 inches wide.

(b) Surface Condition. The pavement surface shall be sufficiently cured prior to the installation of the permanent pavement markings, and these markings shall only be applied after 30 calendar days following the final pavement rolling.

(c) Markings to be removed from final pavement surface shall be removed by an acceptable method as approved by the Office of the County Engineer. Over-painting on final pavement surfaces shall not be permitted to obliterate existing markings.

O. Grassing.

(1) This section includes sodding and seeding with associated work such as mulching, fertilizing and watering and shall conform to the requirements herein, as well as Sections 570 and 575 of FDOT Standard Specifications,2007 version unless modified hereafter in this section.

(2) Materials.

(a) Sod shall be established, well-rooted common Bermuda grass, St. Augustine grass, Centipede grass, Pensacola Bahia grass or Argentine Bahia grass except that where sod replaces or is adjacent to established private lawns, similar grass material to that existing shall be used. Sod shall be alive, fresh and uninjured at the time of planting.

(b) Mulch material shall be dry straw of hay or oats, rye, Bermuda or Bahia grass free of weeds and undesirable grasses.

(c) Seed shall consist of the following mixture per acre: 80 pounds of Argentine Bahia grass, 20 pounds of Roadside Bermuda and 30 pounds of Rye grass or Brown Top Millet (depending on season). Seed shall be verified for a minimum germination rate of 85 percent.

(d) Fertilizer shall conform to Article 6.

(e) Hydro-seeding may be substituted for other methods of grassing except where sodding is specifically required in these specifications. Hydro-seeding shall comply with Section 570 of the FDOT Standard Specifications.

(3) Workmanship.

(a) Either seeding and mulching or sodding may be used except where sodding is specifically required. Work shall not begin until grading is approved. Lack of rain after planting shall not excuse the results of seeding or sodding as required in other sections. Sodding is required one course deep along the edge of pavement (minimum 16 inches as measured from the edge of pavement toward the ditch swale) and also at the ends of all cross drains and any other area where erosion is anticipated to be a problem. All grassing shall be well established, with minimum coverage of 70 percent by the end of the developer's maintenance period or final acceptance, as applicable, and any required grassing areas which are not well established or showing erosion shall be sodded by the developer or contractor prior to acceptance by the County.

(b) Sodding shall be solid with edges staggered where possible. Each section shall be placed in firm contact with the soil.

(c) Seed and fertilizer may be spread by mechanical spreaders which are independently operated as a part of the cultipacker or grain drill. Mulch is required and shall be applied at the rate of four tons per acre and shall be cut into the soil with a rotovator or other approved device. A cultipacker or a traffic roller shall be used for rolling the seeded and mulched areas. No less than 80 pounds of Bahia grass seed and no less than 20 pounds of Bermuda grass seed per acre shall be scattered uniformly over the grassing area. During the months of March through July, an additional 30 pounds per acre of millet grass seed shall be applied in addition to the Bahia grass and Bermuda grass seed. During the months of October through February an additional 30 pounds of rye grass seed shall be applied in addition to the Bahia grass and Bermuda grass seed. Fertilizer application shall be in conformance with Article 6.

P. Concrete .

(1) This section includes requirements for cast-in-place and pre-cast concrete construction.

(2) For testing purposes concrete shall be designed by the working stress method. The ultimate design strength method may also be employed when consistent with industry standard.

(a) Proportioning of ingredients shall be in accordance with accepted mix design.

(b) Reinforcing steel conforming to ASTM A615 with a yield strength no less than grade 40 shall be used unless otherwise specified in the plans.

(c) Welded wire fabric shall conform to ASTM A185.

(d) Premolded expansion joint filler shall conform to ASTM D1751 or D1752.

(e) Joint sealer shall conform to ASTM Specification D1190.

(f) Liquid curing compound shall conform to AASHTO Specification M148-60 Type 2.

(g) Curing paper shall conform to AASHTO Specification M139.

(3) Construction.

(a) Concrete sidewalk shall conform to the requirements herein as well as the FDOT Standard Specification Section 522. Concrete shall be cured using any method contained in 520-8 of the FDOT Standard Specifications.

(b) Concrete curb and gutter, curb elements, and traffic separators shall conform the details herein and the provisions of Section 520 of the FDOT Standard Specifications.

(c) Concrete driveway aprons constructed in public rights-of-way shall conform to the requirements herein as well as the provisions of Section 350 of the FDOT Standard Specifications. Concrete driveways shall be constructed using 3,000 psi concrete and shall be at least six inches thick, and shall have six inch x six inch ten gauge welded wire fabric reinforcement. Fiber concrete may also be used but it also must be reinforced with welded wire fabric. Commercial driveways shall include a minimum of 12 inches stabilized subgrade.

Q. Quality control.

(1) This section includes requirements for testing and inspection. Testing Services shall be performed by an acceptable independent laboratory and inspection services shall be performed and/or overseen by the Project Engineer. Copies of all tests shall be submitted by the testing laboratory to the Office of the County Engineer and the Engineer of Record within three working days after tests are performed. All reports submitted shall be typed and legible.

(2) Testing services.

(a) Testing shall include workmanship, in-situ materials and material mixtures for compliance with the specified requirements. The Office of the County Engineer shall be notified a minimum of 48 hours prior to density tests and other specified tests.

(b) Laboratory maximum density of soils or soil mixtures at optimum moisture shall be determined by ASTM D1557 for road subgrade, base course, pipe trenches and other applications except embankment fill materials for which maximum density shall be determined by ASTM D698.

(c) Field density of limerock base course, stabilized subgrade, stabilized roadway, and soils or soil mixtures in fill or backfill shall be determined by Nuclear Method in accordance with ASTM D2922-81 or D3017-78.

(d) Bearing value for soils and soil mixture shall be determined by the methods required for determining Limerock Bearing Ratio (LBR) according to FDOT Bulletin 22.

(e) Concrete shall be sampled and tested in accordance with ASTM C172, C31 and C39.

(f) Stability of asphaltic concrete shall be in accordance with FDOT Standard Specification 330.

(g) Other tests may be required as indicated in the approved plans and associated documentation.

(3) Testing requirements.

(a) Stabilized subgrade shall be tested for LBR and field density. The minimum acceptable LBR shall be 40, and a minimum of two samples per mile of roadway shall be tested. In no event, shall there be less than one LBR test per project. Additional tests for LBR shall be taken if, in the opinion of the County Engineer, a change in the soil mixture is evident. The density of stabilized subgrade shall not be less than 98 percent of the maximum density as determined by FM 1 T-180. Field density tests shall be at intervals not to exceed 500 feet, but no less than one test shall be taken for each section of road between intersections or between an intersection and the termination of a road. The completed stabilized subgrade shall be shaped to conform to the finished lines, grades and cross sections indicated on the approved plans. The subgrade shall be checked by use of elevation stakes. The stabilized subgrade shall conform to the depths and widths specified on the approved plans. However, in no case shall the variance be greater than 1/2 inch for depth and two inches for width as measured from the centerline. The stabilized subgrade shall be located within the right-of-way in accordance with the approved plans.

(b) Limerock base course shall be tested for LBR, carbonates of calcium and magnesium, liquid limit, plasticity, density and the width and depth specified. The minimum acceptable LBR shall be 100. A minimum of two samples per mile of roadway shall be tested. In no event shall there be less than one LBR test per project. Carbonates, liquid limits and plasticity shall conform to the requirements of Section 911 of the FDOT Standard Specifications. Density shall not be less than 98 percent of maximum density as determined by FM 1 T-180. Field density tests shall be at intervals not to exceed 500 feet, but no less than one test shall be taken for each section of road between intersections or between an intersection and the termination of a road. The finished surface of the base course shall be checked with a template cut to the required crown and with a 15 foot straight edge laid parallel to the center line of the road. All irregularities greater than 1/4 inch shall be corrected by scarifying and removing or adding rock as required, after which the entire area shall be re-compacted as specified. The base course shall conform to the depths and widths specified on the approved plans. However, in no case shall the variance be greater than 1/2 inch for depth and two inches for width as measured from the centerline.

(c) Asphaltic concrete surface course shall have extraction and specific gravity tests taken on the material placed each day. Design mix must be submitted to and approved by the Office of the County Engineer prior to the manufacture of the asphaltic concrete. The finished surface shall conform to Section 330-12 of the FDOT Standard Specifications. The surface course shall conform to the depths and widths specified on the approved plans. Density of asphaltic concrete surface course shall be 92 percent of approved project mix laboratory density.

(d) Stabilized roadway shall be tested as required for stabilized subgrade.

(e) Stabilized shoulder shall be tested as required for stabilized subgrade. Field density shall be taken at intervals not to exceed one-quarter mile on each side of the road. Density of stabilized shoulder shall not be less than 95 percent of maximum density as determined by FM 1 T-180.

(f) Pipe trenches within the limits of proposed pavement, stabilized roadway and stabilized shoulders, where such construction can be reasonably anticipated, shall be backfilled in accordance with Section 125-8, FDOT Standard Specifications and details herein. Tests on each layer of backfill shall be taken in intervals not to exceed 400 lineal feet of trench.

(4) Inspection services.

(a) Inspection services shall include field examination for compliance with all requirements of these specifications.

(b) Dimensional inspection. All construction shall be inspected before concealment to determine compliance with all depth, width, height, thickness and other dimensional provisions of these specifications.

(c) Materials inspection. All materials used in construction which are not controlled by the testing requirements of this section shall be inspected for compliance with the provisions of other sections of these specifications. Manufacturer's certificates of compliance with the requirements of these specifications shall be furnished when requested.

(d) Certification of Satisfactory Completion shall include certification as to both testing and inspection as to being in substantial compliance with the approved plans and associated documents. The project engineer is responsible for testing only to the extent of the receipt and review of all required satisfactory test results from the independent testing laboratory prior to the issuance of his certificate.

Division 2 Utility Construction Specifications

Sec. 7.2.1 Purpose and intent

This division sets forth the specifications for the construction of pipes and appurtenances for the utility system.

Sec. 7.2.2 Minimum requirements

A. Grades, survey lines and monuments:

(1) All work shall be constructed in accordance with the lines and grades shown on the plans. The full responsibility for keeping alignment and grade shall rest upon the contractor.

(2) The contractor shall furnish and maintain stakes and other such materials, and give such assistance, for setting reference marks to the satisfaction of MCUD and the engineer. The contractor shall check such reference marks by such means as he may deem necessary and shall call MCUD's attention to any inaccuracies.

(3) The contractor shall, at his own expense, establish all working or construction lines and grades as required from the reference marks, and shall be solely responsible for the accuracy thereof.

(4) Property corners and survey monuments shall be preserved using care not to disturb or destroy them. If a property corner or survey monument is disturbed or destroyed during construction, whether by accident, careless work, or required to be disturbed or destroyed by the construction work, said property corner or survey monument shall be restored by a Florida licensed Surveyor. Contractor shall be responsible for all associated costs.

(5) The contractor shall provide line and grade stakes at a 100 feet maximum spacing and at all line or grade change locations.

(6) Contractor shall provide temporary bench marks at maximum 1,000 foot intervals in compliance with state statutes.

(7) The contractor shall constantly check line and grade of the pipe by laser beam method. In the event line and grade do not meet specified limits described hereinafter, the work shall be immediately stopped, MCUD notified, and the cause remedied before proceeding with the work

B. Utility coordination

(1) All information received by the engineer and contractor through the review of MCUD record drawings and project files shall not be relied upon by contractor without field verification. The contractor is responsible for subsurface verification of all existing utilities prior to construction.

(2) The contractor shall contact Sunshine State One Call of Florida, Inc., in accordance with required timeframes, prior to commencement of work, to locate existing underground utilities.

(3) The contractor shall utilize due care at all times when performing excavations.

(4) The contractor shall comply with all trench safety requirements as outlined in the FAC, and OSHA standards.

(5) The contractor shall take all reasonable precautions against damage to existing utilities. However, in the event of damage to an existing utility, the contractor shall immediately notify the responsible official of the organization operating the interrupted utility. The contractor shall lend all possible assistance in restoring services and shall assume all cost, charges, and/or claims connected with the interruption and repair of such services, as determined by Florida Statutes.

(6) If the contractor damages existing facilities belonging to MCUD, MCUD may elect to expedite the repairs to its facilities with MCUD forces. The contractor shall reimburse MCUD for all repair costs should the contractor not act in a timely manner or is found to be negligible.

C. The contractor shall not operate MCUD valves without prior MCUD authorization.

D. Deviations occasioned by structures or utilities

(1) Wherever obstructions are encountered during the progress of the work and interfere to such an extent that an alteration in the plans is required, MCUD shall have the authority to order a deviation from the line and grade or arrange with the owners of the structures for the removal, relocation, or reconstruction of the obstructions.

(2) Where other existing utilities are an impediment to the vertical or horizontal alignment of a proposed main, MCUD shall have the authority to order a change in grade or alignment of the proposed main. MCUD shall have the authority to direct the contractor to coordinate with all utilities and other users of the right-of-way to facilitate appropriate conflict resolutions.

E. Subsurface exploration and test pits

(1) The contractor shall examine the site and undertake subsurface investigations including soil borings before commencing the work. MCUD will not be responsible for presumed or existing soil conditions in the work area.

(2) Test pits:

(a) Test pits for the purpose of locating underground pipeline, utilities, or structures in advance of the construction shall be excavated and backfilled by the contractor

(b) Test pits shall be backfilled immediately after their purpose has been satisfied and maintained in a manner satisfactory to MCUD.

(c) The costs for such test pits shall be borne by the contractor.

(d) Test pit locations are to be included in construction contracts and the location shall be determined by MCUD at the pre-design meeting. Test pits shall be included in the bid form.

F. Maintenance of traffic and closing of streets: Refer to Section 7.1.2.G

G. Protection of public and property: Refer to Section 7.1.2.G

H. Protection of utility structures

(1) Temporary support, adequate protection and maintenance of all underground and surface utility structures including drains, sewers, manholes, hydrants, valves, valve covers, power poles and miscellaneous other utility structures encountered in the progress of the work shall be furnished by the contractor at his expense.

(2) Any such structures that may have been disturbed shall be restored upon completion of the work.

(3) MCUD's valves, hydrants, manholes, and other appurtenances shall be made accessible to MCUD's personnel during all phases of construction.

I. Open excavation: Refer to Section 7.1.2.H

J. Protection of trees and sod: Refer to Section 7.1.2.P

K. Restoration of fences

(1) Any fence, or part thereof, that is damaged or removed during the course of the work shall be repaired or replaced by the contractor and shall be left in as good a condition as before the starting of the work. Areas affected by fence removal shall be secured daily.

(2) The manner in which the fence is repaired or replaced and the materials used shall be subject to the approval of MCUD.

L. Protection against siltation and bank erosion: Refer to Section 7.1.2.G

M. Access to public services: Refer to Section 7.1.2.G

N. Public nuisance: Refer to Section 7.1.2.G

O. Construction in easements and rights-of-way: Refer to Section 7.1

P. Miscellaneous requirements.

(1) All work which might be damaged or rendered inferior by inclement weather shall be suspended during such weather. The work shall be covered and protected so that it is not damaged by the weather.

(2) All chemicals used for construction or furnished for operation, must show approval from the EPA. Use of such chemicals and disposal of residues shall be in strict conformance with label instructions and materials safety data sheets supplied by the manufacturer.

(3) The contractor shall not impede or interfere with the work of other contractors on the project and shall cooperate with the other contractors to ensure project progress.

(4) Any existing MCUD owned equipment or material which is removed or replaced as a result of construction that is determined by MCUD as salvage in the construction documents shall be delivered to an MCUD approved location.

Sec. 7.2.3 Confined spaces

All confined space entries shall comply with all applicable FAC and OSHA requirements.

Sec. 7.2.4 Site work

A. General

All site work shall conform to the approved plan for which a permit is issued.

B. Excavation

(1) General

(a) All excavation, backfill, fill, and grading associated with utility trench and structural construction shall be performed by the contractor concurrently with the work specified in the project specifications.

(b) The contractor shall furnish all labor, materials, equipment, and incidentals necessary to perform all excavation, backfill, compaction, grading, shoring, and slope protection required to complete the work shown on the drawings and specified herein.

(c) The work shall include, but not necessarily be limited to: lift stations, manholes, vaults, conduit, pipe, roadways and paving; all backfilling, fill, and required borrow; grading; disposal of surplus and unsuitable materials; and all related work such as sheeting, bracing, and water handling.

(d) Unauthorized excavation, as well as remedial work directed by MCUD, shall be at the contractor's expense.

(e) When excavation has reached required sub grade elevations, a geotechnical/soils engineer shall make an inspection of conditions, if requested by MCUD. If the sub grade is unsuitable, contractor shall carry excavation deeper and replace excavated material with select common fill or bedding rock, as directed by MCUD.

(f) If the contractor excavates below grade through error, for his own convenience, or through failure to properly dewater the excavation or disturbs the sub grade before dewatering is sufficiently complete, the contractor may be directed by MCUD to excavate below grade and refill the excavation using select common fill or bedding rock.

(g) Slope sides of excavations shall comply with local codes, ordinances, and OSHA requirements. Contractor shall shore and brace where sloping is not possible due to space restrictions or stability of the material excavated in accordance with 29 CFR 1926.650. Sides and slopes shall be maintained in a safe condition until completion of backfilling.

(h) Contractor shall stockpile satisfactory excavated materials at a location approved by MCUD until required for backfill or fill. When needed in the work, material shall be located and graded at the direction of a geotechnical/soils engineer.

(i) Stockpiles shall be placed and graded for proper drainage. All soil materials shall be located away from the edge of excavations. All surplus and/or unsuitable excavated material shall be legally disposed of by the contractor daily. Any permits required for the hauling and disposing of this material shall be obtained by the contractor prior to commencing hauling operations.

(2) Excavation for structures.

(a) All such excavations shall conform to the elevations and dimensions shown on drawing within a tolerance of plus or minus 0.10 foot and extending a sufficient distance, as shown on the drawings, from footings and foundations to permit placing and removing form work, installation of services, and other construction or inspection.

(b) In excavating for footings and foundations, care shall be exercised not to disturb the bottom of the excavation. Bottoms shall be trimmed to required lines and grades to leave a solid base to receive concrete.

(3) Trench excavation.

(a) Excavation for all trenches required for the installation of utility pipes shall be made to the depths or elevations indicated on the drawings and in such manner and to such widths as will give suitable room for laying the pipe within the trenches, for bracing and supporting, and for pumping and drainage facilities.

(b) The bottom of the excavations shall be firm and dry and in all respects acceptable to MCUD.

(c) Excavation shall not exceed normal trench width as specified in the standard drawings and as per FDOT Standard Specifications for Road and Bridge Construction.

(d) Where pipes are to be laid in bedding rock, select common fill or encased in concrete, the trench may be excavated by machinery to or just below the designated subgrade provided that the material remaining in the bottom of the trench is no more than slightly disturbed.

(e) Where the pipes are to be laid directly on the trench bottom, the lower part of the trenches shall not be excavated to grade by machinery. The last of the material being excavated shall be done manually in such a manner that will give a shaped bottom, true to grade, so that pipe can be evenly supported on undisturbed material, as specified in the Standard Details. Bell holes shall be made as required.

C. Sheeting and bracing in excavations

All sheeting and bracing shall comply with OSHA regulations in accordance with 29 CFR 1926.650.

D. Dewatering, drainage, and flotation

(1) The dewatering operation shall comply with the requirements of the permitting regulatory agencies.

(2) The contractor shall excavate, construct, and place all pipelines, concrete work, fill, and bedding rock in-the-dry. The contractor shall not make the final 24 inches of excavation until the water level is a minimum of one foot below proposed bottom of excavation.

(3) Discharge water shall be clear, with no visible soil particles.

(4) Discharge from dewatering shall be disposed of in such a manner that it will not interfere with the normal drainage of the area in which the work is being performed, create a public nuisance, or form ponding.

(5) The operations shall not cause injury to any portion of the work completed, or in progress, or to the surface of streets, or to private property.

(6) If private property is involved, advance written permission shall be obtained by the contractor from the property owner.

(7) The contractor shall provide and maintain proper equipment and facilities to remove and properly dispose of all water entering excavations. Such excavations shall be kept dry to obtain a satisfactory undisturbed subgrade foundation condition until completion and acceptance of construction.

(8) Dewatering shall be conducted in such a manner as to preserve the natural undisturbed bearing capacity of the subgrade soils at proposed bottom of excavation.

(9) Wellpoint's shall be surrounded by suitable filter sand and negligible fines shall be removed by pumping.

(10) The contractor shall furnish all materials and equipment and perform all work required to install and maintain the drainage systems for handling groundwater and surface water encountered during construction of structures, pipelines and compacted fills.

(11) Water levels shall be measured in observation wells located as directed by MCUD during backfilling and construction. Continuous pumping will be required as long as water levels are required to be below natural levels.

E. Bedding and fill

(1) General

(a) Material placed in fill areas under and around structures and pipelines shall be deposited within the lines and to the grades shown on the drawings or as directed by MCUD, making due allowance for settlement of the material.

(b) Fill shall be placed only on properly prepared surfaces which have been inspected and approved by MCUD. If sufficient select common or common fill material is not available from excavation on site, the contractor shall provide fill as may be required.

(c) Fill shall be brought up in substantially level layers or lifts starting in the deepest portion of the fill. All lifts shall be a maximum of 12 inches in depth.

(d) The entire surface of the work shall be maintained free from ruts and in such condition that construction equipment can readily travel over any section.

(e) Prior to filling, the ground surface shall be prepared by removing vegetation, debris, unsatisfactory soil materials, obstructions and deleterious materials. Contractor shall plow strip or break up sloped surfaces steeper than one vertical to four horizontal so that fill material will bond with the existing surface.

(f) Fill material shall not be placed on surfaces that are wet, muddy, frozen, or contain frost or ice.

(2) Materials

(a) Materials for backfilling shall be as specified in FDOT Utility Accommodation Manual (UAM) .

(b) Samples of the materials used as bedding and fill, whether excavated or borrow material, shall be made available for testing by MCUD upon request.

(c) Fill that is unsuitable by FDOT UAM standards shall be removed and replaced with suitable material at the direction of MCUD at no additional cost beyond that contained in the construction contract.

(3) Bedding and fill for structures.

(a) Bedding rock shall be used for bedding under all structures as indicated on the standard details. The contractor shall take all precautions necessary to maintain the bedding in a compacted state and to prevent washing, erosion or loosening of this bed.

(b) Fill shall be used as backfill against the exterior walls of the structures.

(c) Fill shall be compacted sufficiently in accordance with Section 7.5.4.H of these specifications. If compaction is by rolling, tamping, vibratory, or ramming, material shall be wet down as required.

(d) Backfilling shall be carried up evenly on all walls of an individual structure. No fill shall be allowed against walls until the walls and their supporting slabs, if applicable, have attained sufficient strength.

(e) Where pipes pass through building walls, the contractor shall take precautions to consolidate the fill up to an elevation of at least one foot above the bottom of the pipes. Fill in such areas shall be placed for a distance of not less than 3 feet either side of the edge of the pipe in level layers not exceeding 8 inches in depth.

(f) The surface of filled areas shall be graded to smooth true lines, strictly conforming to grades indicated on the drawings. No soft spots or uncompacted areas will be allowed in the work.

(g) Temporary bracing shall be provided as required during construction of all structures to protect partially completed structures against all construction loads, hydraulic pressure and earth pressure. The bracing shall be capable of resisting all loads applied to the walls as a result of backfilling.

(4) Bedding and fill for pipes.

(a) Bedding for pipe shall be as shown on the plans and comply with the standard details. The contractor shall take all precautions necessary to maintain the bedding in a compacted state and to prevent washing, erosion or loosening of this bed.

(b) Backfilling over and around pipes shall begin as soon as practicable after the pipe has been laid, jointed, and inspected. All backfilling shall be promptly completed and as shown on the standard detail.

(c) Any space remaining between the pipe and sides of the trench shall be carefully backfilled and spread by hand or approved mechanical device and thoroughly compacted with a tamper as fast as placed, up to a level of one foot above the top of the pipe. The backfilling shall be carried up evenly on both sides. Compaction shall be in accordance with the standard details and Section 7.5.4.H.

(5) The remainder of the trench above the compacted fill, as described above, shall be backfilled and thoroughly compacted in uniform layers. Compaction shall be in accordance with the standard details and Section 7.5.4.H.

F. Compaction

(1) General.

(a) The contractor shall control soil compaction during construction on each one foot lift to provide a minimum density of 95 percent of the maximum dry compacted density as determined by AASHTO T-180.

(b) When within the limits of the roadbed, driveways and all travelways, the contractor shall control soil compaction during construction on each one foot lift to provide a minimum density of 98 percent of the maximum dry compacted density as determined by AASHTO T-180.

(c) The contractor shall provide MCUD copies of all soils testing reports, prepared by a geotechnical/soils engineer, demonstrating compliance with these specifications.

(d) If the compacted surface of any layer of material is determined to be too smooth to bond properly with the succeeding layer, it shall be loosened by harrowing or by another approved method before the succeeding layer is placed.

(e) All fill materials shall be compacted in-the-dry. The contractor shall dewater excavated areas as required to perform the work and in such manner as to preserve the undisturbed state of the natural inorganic soils. Contractor shall break up the ground surface, pulverize, moisture-condition to the optimum moisture content, and compact to required depth and percentage of maximum density.

(f) Material shall be moistened or aerated as necessary to provide the optimum moisture content before compaction.

(g) Material which is too wet shall be spread on the fill area and permitted to dry, assisted by harrowing if necessary, until the moisture content is reduced to allowable limits.

(h) The contractor shall supply all hose, piping, valves, sprinklers, pumps, sprinkler tanks, hauling equipment and all other materials and equipment necessary to place water in the fill in the manner specified.

(2) Compaction tests.

(a) One compaction test location shall be required for each 300 feet of pipe and for every 100 square feet of backfill around structures as a minimum. MCUD may determine that more compaction tests are required to certify the installation depending on field conditions. The locations of compaction tests within the trench shall be in conformance with the following

schedule:

1. One test at the spring line of the pipe.
2. At least one test for each 12 inches layer of backfill within the pipe bedding zone for pipes 24 inches and larger.
3. One test at an elevation of one foot above the top of the pipe.
4. One test for each two feet of backfill placed from one foot above the top of the pipe to finished grade elevation.

(b) If geotechnical/soils engineer testing indicates fill which has been placed is below specified density, contractor shall provide additional compaction and testing prior to commencing further construction.

G. Grading. Refer to Sec 7.1.2.L

Sec. 7.2.5 Trenchless pipe installation

All jack and bore and horizontal directional drilling shall comply with FDOT Standard Specifications, as amended.

Sec. 7.2.6 General Construction Requirements

A. Pipe handling.

(1) The contractor shall be responsible for all materials furnished and storage of same, until the date of substantial completion. All PVC pipe materials shall be stored so as not exposed to direct sunlight prior to installation.

(2) The contractor shall replace at his own expense all materials found to be defective or damaged in handling or storage. The contractor shall, if requested by MCUD, furnish certificates, affidavits of compliance, test reports, or samples for check analysis for any of the materials specified herein.

(3) All pipe delivered to project site for installation is subject to random testing for compliance with the designated specifications.

(4) Pipe shall be handled in such a manner as will prevent damage to the pipe or coating.

(5) Accidental damage to pipe or coating shall be repaired or replaced to the satisfaction of MCUD or replaced.

(6) The pipe shall be supported on timber cradles or on properly prepared ground, graded to eliminate all rock points and to provide uniform support along the full length, when not being handled.

(7) The pipe shall be supported at all times in a manner which will not permit distortion or damage to the lining or coating when being transported.

(8) Joint gaskets shall be stored in a clean, dark, and dry location until immediately before use.

(9) All pipe and fittings shall be inspected prior to lowering into trench to insure no cracked, broken, or otherwise defective materials are being used.

(10) The contractor shall clean ends of pipe thoroughly and remove foreign matter and dirt from inside of pipe and keep clean during and after laying.

(11) Pipe shall not be dropped or dumped into trenches under any circumstances. Pipe shall be lowered into the trench in such a manner as to avoid any physical damage to the pipe.

B. Pipe installation

(1) Dirt or other foreign material shall be prevented from entering the pipe or pipe joint during handling or laying operations and any pipe or fitting that has been installed with dirt or foreign material in it shall be removed, cleaned and relaid. When pipe laying is not in progress, the open ends of the pipe shall be closed by a water-tight plug or by other means approved by MCUD to

ensure absolute cleanliness inside the pipe.

(2) If the pipe laying crew cannot put the pipe into the trench and in place without getting earth into the pipe, MCUD may require that snugly-fitted, tightly-woven canvas bags be placed over each end before lowering the pipe. The bags shall be left in place until the connection is to be made to the adjacent pipe.

(3) Contractor shall remove all foreign material from the pipe or joint ring before the next pipe is placed.

(4) Minimum pipe depth shall comply with FDEP design criteria.

(5) All PVC pipe shall be installed in accordance with AWWA C600.

(6) All ductile iron pipe shall be installed in accordance with AWWA C600 unless such standards conflict with this Code in which case this Code shall apply. Contractor shall cut pipe only as necessary to comply with alignment shown on the plans. Flame cutting of pipe shall not be allowed.

(7) Contractor shall provide special tools and devices, such as special jacks, chokers, and similar items required for proper installation. Lubricant for the pipe gaskets shall be furnished by the pipe manufacturer, and no substitutes shall be permitted under any circumstances.

(8) Long radius curves, either horizontal or vertical, shall be laid with standard pipe by deflections at the joints. Maximum deflections at pipe joints and laying radius for the various pipe lengths shall be as recommended by the pipe manufacturer. Laying of sewer pipe shall be accomplished to line and grade in the trench only after it has been dewatered and the trench has been prepared in accordance with specifications outlined herein.

(9) All pipe laid shall be retained in position so as to maintain alignment and joint closure until sufficient backfill has been completed to adequately hold the pipe in place. All pipe shall be laid to conform to the line and grade shown on the plans.

(10) Variance from established line and grade, at any point along the length of the pipe, shall not be greater than 1/32 inches per inch of pipe diameter and not to exceed 1/2 inches, provided that any such variation does not result in a level or reverse sloping invert.

(11) The sewer pipe shall be laid up grade from point of connection on the existing sewer or from a designated starting point.

(12) The sewer pipe shall be installed with the bell end forward or upgrade.

(13) All pipe shall be installed to the homing mark on the spigot. MCUD shall be given an opportunity to check all joints in this manner before backfilling.

(14) The markings on reinforced concrete pipe indicating the minor axis of the elliptical reinforcement shall be placed in a vertical plane (top or bottom) when the pipe is laid.

C. Coatings and linings.

(1) All ductile iron pipe and fittings shall have an interior and exterior protective coating approved by MCUD, and applied according to the manufacturer's specifications.

(2) Where ductile iron pipe and fittings are to be below ground or installed in a casing pipe the exterior coating shall be a minimum one mil thick in accordance with ANSI/AWWA A21.51/C151, or a MCUD approved alternative.

(3) Where ductile iron pipe and fittings are to be installed above ground, pipe, fittings, and valves shall be thoroughly cleaned and given one field coat (minimum 1 1/2 mils dry thickness) of rust inhibitor primer. Intermediate and finished field coats shall also be applied by the contractor (minimum 1 1/2 mils dry thickness each coat).

(4) Primer and field coats shall be compatible and shall be applied in accordance with the manufacturers' recommendations.

(5) Final field coat shall be blue for domestic water, green for sewer, and Pantone 522-C for reclaimed.

(6) All domestic and reclaimed water ductile iron pipe and fittings shall have an interior protective cement-mortar lining and an exterior seal coat of asphaltic material in accordance with ANSI/AWWA A21.4/C104, or a MCUD approved alternative.

(7) All sewer ductile iron pipe and fittings shall have an interior protective lining of coal tar epoxy or polyethylene with a minimum dry thickness of 30 mils applied by the pipe manufacturer. Polyethylene lining material shall comply with ASTM D-1248 and shall be fused to the interior of the pipe by heat forming a tightly bonded lining.

(8) Ductile iron pipe shall be polyethylene encased (eight mil) where shown on the drawings and in accordance with ANSI/AWWA A21.51/C105.

D. Pipe markings, identification and location.

(1) On field cut pipe, contractor shall provide homing mark on the spigot in accordance with manufacturers' recommendations

(2) Reinforced concrete pipe shall have markings indicating the minor axis of the elliptical reinforcement.

(3) Each length of pipe shall bear the name or trademark of the manufacturer, the location of the manufacturing plant, and the class or strength classification of the pipe and be plainly visible on the pipe barrel.

(4) Pipe which is not marked clearly is subject to rejection. All rejected pipe shall be promptly removed from the project site by the contractor.

(5) All non-metallic water mains shall be installed with a continuous, insulated 14 gauge copper wire installed directly on top and affixed to the pipe for locating purposes.

(6) All PVC water mains shall be a solid blue color.

(7) All ductile iron force mains shall be marked with a continuous stripe located within the top 90° of the pipe. Said stripe shall be a minimum two inches in width and shall be green in color. Backfill shall not be placed for 30 minutes following paint application.

(8) Horizontal directional drilling shall use 2 locating wires with a tensile strength of 1800 psi.

(9) All PVC force mains shall be a solid green color.

(10) All lettering shall appear legibly on the pipe and shall run the entire length of the pipe. Lettering shall read as is acceptable for the intended use.

(11) Utility main markers shall be required when a main is more than 30 feet from the edge of pavement or in an easement not adjacent to the right-of-way.

E. Separation of Pipes.

Horizontal and vertical separation of pipes shall comply with FAC and this Code, unless otherwise approved by MCUD and the County Engineer.

F. Testing and inspection.

(1) Testing criteria.

(a) Hydrostatic tests shall consist of a pressure and leakage test.

(b) Hydrostatic tests shall be conducted on all newly laid pressure pipes, joints, and valves including all service lines to the curb stops.

(c) Air testing of pressure pipes will not be permitted under any circumstance.

(d) Tests may be made on sections not exceeding 2,000 feet, when this procedure is acceptable to MCUD.

(e) Contractor shall furnish all necessary equipment and material, make all taps, and furnish all closure pieces in the pipe as required.

(f) Equipment to be furnished by the contractor shall include graduated containers, pressure gauges, hydraulic force pumps, and suitable hoses and piping.

(g) MCUD will monitor and approve a satisfactory test.

(h) The contractor may conduct hydrostatic tests after the trench has been partially backfilled with the joints left exposed for inspection for his informational purposes only.

(i) The hydrostatic tests for acceptance shall only be conducted after the trenches have been completely backfilled and compacted as specified.

(j) Where any section of pipe is provided with concrete thrust blocking, pressure test will not be made until at least five days have elapsed after the thrust blocking is installed. If high-early cement is used for the concrete thrust blocking, the time may be reduced to 24 hours if MCUD concurs that the concrete has cured and reached adequate strength.

(k) All pipe sections to be pressure tested shall be subjected to a hydrostatic pressure of 150 psi. The duration of each pressure test shall be for a period of two hours. The basic provisions of AWWA C600 shall be applicable.

(l) Prior to testing, the contractor shall flush all sewers with water sufficient in volume to obtain free flow through each line. Flushing water and debris shall not enter any operating lift station wet well. Flushing water will be pumped from the sewer system during flushing to an acceptable discharge location. A visual inspection, via video logging, shall be made and all obstructions removed.

(2) Procedure for pressure test.

(a) Each section of pipe to be tested, as determined by MCUD, shall be slowly filled with water and the specified test pressure shall be applied by means of a pump connected to the pipe in a satisfactory manner.

(b) Before applying the specified test pressure, all air shall be expelled from the pipe. To accomplish this, taps shall be made, and appropriate valves installed to ensure bleeding of all air from the main.

(c) If defective pipes, fittings, valves, or hydrants are discovered in consequence of this pressure test, all such items shall be removed and replaced by the contractor with sound material and the test shall be repeated until satisfactory results are obtained. Provisions of AWWA C600, where applicable, shall apply.

(3) Procedure for leakage test.

(a) After completion of the pressure test, a leakage test shall be conducted to determine the quantity of water lost by leakage under the specified test pressure. Provisions of AWWA C600, where applicable, shall apply.

(b) Allowable leakage in gallons per hour for pipeline shall not be greater than that determined by AWWA Manual 23 or the formula:

$L=N*D*(P^{(1/2)}) / 7400$

Note:

L = Maximum allowable leakage in gallons per hour.

N = Number of pipe joints.

D = Nominal diameter of the pipe in inches.

P = Average test pressure during leakage test in pounds per square inch gauge.

(c) Leakage is defined as the quantity of water to be supplied in the newly laid pipe or any valved section under test, which is necessary to maintain the specified leakage test pressure after the pipe has been filled with water and the air expelled.

(d) Should any test of pipe laid disclose leakage greater than that allowed, contractor shall locate and replace or repair the defective joints, pipe or valve until the leakage from subsequent testing is within the specified allowance. All pipe and accessories to be installed shall be inspected and tested at the place of manufacture by the manufacturer as required by the manufacturer's specifications.

(e) Each length of pipe shall be subject to inspection and approval at the factory, point of delivery, and site of work. If requested by MCUD, a sample of pipe to be tested shall be selected at random by MCUD or the testing laboratory approved by MCUD.

(f) When the specimens tested conform to applicable standards, all pipe represented by such specimens shall be considered acceptable based on the test parameters measured. Copies of test reports shall be available before the pipe is installed in the project.

(g) In the event that any of the test specimens fail to meet the applicable standards, all pipe represented by such tests shall be subjected to rejection. The contractor may furnish two additional test specimens from the same shipment or delivery, for each specimen that failed and the pipe will be considered acceptable if all of these additional specimens meet the requirements of the applicable standards. All such retesting shall be at the Contractor's expense.

(4) Pipe which has been rejected by MCUD shall be removed from the site of the work by the contractor and replaced with pipe which meets these specifications. All gravity sewers shall be tested for alignment, deflection and integrity prior to acceptance. In addition, a leakage test may be required for gravity sewers, at the discretion of MCUD.

(5) The leakage testing shall be performed by the contractor who shall be responsible for furnishing all necessary labor and equipment to conduct such testing. Alignment, deflection and integrity testing shall be performed utilizing television inspection or other methods solely at the discretion of MCUD.

(6) Gravity sewers shall be required to pass a leakage test before acceptance.

(7) Leakage testing shall be conducted in accordance with the procedure for "Recommended Practice for Low Pressure Air Testing of Installed Sewer Pipe" as established by the Uni-Bell PVC Pipe Association and ASTM F1417. Passing this test shall be presumed to establish leakage test limits of 50 gallons per day per inch diameter per mile of sewer.

(8) Each test section shall not exceed 400 feet in length and shall be tested between adjacent manholes.

(9) The contractor shall notify the Utilities Inspector a minimum of 48 hours prior to performing any leakage testing.

(10) The results of all leakage tests shall be witnessed and approved by the MCUD inspector. These written results shall be formatted and adequately labeled so that they are easily understandable, and a copy provided to MCUD.

(11) Internal video inspection or other testing methods for the gravity sewer shall be performed to check for, cleanliness, infiltration, alignment and deflection. The video inspection may also be used to check for cracked, broken or otherwise defective pipe, and overall pipe integrity.

(a) If the video inspection reveals cracked, broken, or defective pipe, or pipe misalignment resulting in vertical sags in excess of one and one-half inch and in the case of PVC pipe a ring deflection in excess of five percent, the contractor shall be required to repair or replace the pipeline. MCUD reserves the right to pass a mandrel through the PVC pipe to confirm ring

deflection.

(b) Successful passage of the leakage test, and video or visual inspection is required before acceptance by MCUD.

(c) Prior to repair or replacement of failed sewer pipe, the method of repair or replacement shall be submitted to MCUD for approval. Pressure grouting of pipe or manholes shall not be considered as an acceptable method of repair.

G. Miscellaneous requirements.

(1) During inclement weather, all work which might be damaged or rendered inferior by such weather conditions shall be suspended. During suspension of the work from any cause, the work shall be suitably covered and protected so as to preserve it from injury by the weather or other circumstances. This measure includes installing temporary plugs in pipe ends to prevent contamination, inflow of debris, or access for animals and insects.

(2) Any chemicals used during project construction or furnished for project operation, whether herbicide, pesticide, disinfectant, polymer, reactant, or of other classification, must show approval of either EPA or USDA. Use and storage of all such chemicals and disposal of residues shall be in strict conformance with label instructions and materials safety data sheets supplied by the manufacturer.

(3) During construction progress, it may be necessary for other contractors and persons employed by MCUD to work in or about the site. MCUD reserves the right to put such other contractors to work and to afford such access to the construction site and at such times as MCUD deems proper. The contractor shall not impede or interfere with the work of such other contractors and shall cooperate with the other contractors for proper execution of the work.

(4) Any existing MCUD owned equipment or material including but not limited to valves, pipes, fittings, couplings, etc., which is removed or replaced as a result of construction, may be designated as salvage by the MCUD, and if so, shall be carefully excavated if necessary and delivered to MCUD at a location within Marion County.

Sec. 7.2.7 Pressure pipe restraint.

A. Restrained joint construction.

(1) Sections of piping requiring restrained joints shall be constructed using pipe and fittings with restrained "locked-type" joints manufactured by the pipe and fitting manufacturer.

(2) The joints shall be capable of holding against withdrawal for line pressures 50 percent above the normal working pressure.

(3) Restrained pipe joints that achieve restraint by incorporating cut out sections in the wall of the pipe shall have a minimum wall thickness at the point of cut out that corresponds with the minimum specified wall thickness for the rest of the pipe.

(4) The minimum number of restrained joints required for resisting forces at fittings and changes in direction of pipe shall be determined from the length of restrained pipe on each side of fittings and changes in direction necessary to develop adequate resisting friction with the soil.

(5) All pressure pipe fittings and other items requiring restraint shall use restraining assemblies as specified in the standard detail. In rare circumstances, thrust blocks may be used with approval of MCUD.

(6) The mechanical joint restraint device shall have a working pressure of at least 250 psi with a minimum safety factor of 2:1.

B. Mechanical restraining devices.

(1) Mechanical restraining devices as specified herein may be substituted for the restrained "locked-type" joints manufactured by the ductile iron pipe and fitting manufacturer.

(2) Joint restraint device.

(a) Mechanical joint restraint shall be incorporated in the design of the follower gland and shall include a restraining mechanism which, when actuated, imparts multiple wedging action against the pipe, increasing its resistance as the pressure increases.

(b) Flexibility of the joint shall be maintained after burial.

(c) Glands shall be manufactured of ductile iron conforming to ASTM 536.

(d) Restraining devices shall be of ductile iron heat treated to a minimum hardness of 370 BHN.

C. Thrust blocks.

(1) Additional concrete, harnesses, and/or ties shall be approved by MCUD.

(2) Fittings shall be protected by polyethylene film, minimum eight mil thick, prior to placing concrete thrust block.

(3) Concrete for thrust blocking shall have a minimum compressive strength of 2,500 psi.

(4) Concrete shall be placed against undisturbed material, and shall not cover joints, bolts, or nuts, or interfere with the removal of any joint.

(5) Wooden side forms shall be provided for thrust blocks where trench conditions require.

(6) Thrust blocks shall be properly set and adequately cured prior to pressurizing the system.

Sec. 7.2.8 Valves and valve boxes.

A. General.

(1) All valves and appurtenances shall be designed, constructed and installed in accordance with the best practices and methods and shall comply with these specifications as applicable.

(2) All valves shall be inspected upon delivery in the field to insure proper working order before installation.

(3) Valves shall be set and jointed to the pipe in the manner as set forth in the AWWA Standards for the type of connection ends furnished.

(4) All valves and appurtenances shall be installed true to alignment and rigidly supported.

(5) Any valve or valve box damage shall be repaired to the satisfaction of MCUD before they are installed.

(6) Valves shall be installed in a vertical position and be provided with a standard valve box so arranged that no shock will be transmitted to the valve. The box shall be vertically centered over the operating nut, and the cast iron box cover shall be set flush with the road or finished surface.

(7) After installation, all valves shall be subjected to the field test for piping as outlined in Section 7.5.6.F. Should any defects in materials or workmanship appear during these tests, the contractor shall correct such defects to the satisfaction of MCUD.

(8) Flanged joints shall be made with hot dipped galvanized bolts, nuts and washers. Mechanical joints shall be made with mild corrosion resistant alloy steel bolts and nuts. All exposed bolts shall be painted the same color as the pipe. All buried bolts and nuts shall be heavily coated with two coats of bituminous paint.

(9) Valves shall be located in an enclosure consistent with the standard details.

B. Resilient seat gate valves.

(1) General.

(a) All gate valves 12 inches and smaller shall be resilient seat gate valves.

(b) Gate valves shall be resilient seated, manufactured to meet or exceed the requirements of AWWA C509, as amended.

(c) Valves shall have an unobstructed waterway equal to or greater than the full nominal diameter of the valve.

(2) Material.

(a) The valve body, bonnet, and bonnet cover shall be cast iron ASTM A126, Class B.

(b) All ferrous surface inside and outside shall have a fusion-bonded epoxy coating. A two inch nut shall be provided for operating the valve.

(c) All valves are to be tested in strict accordance with AWWA C509.

(3) Miscellaneous requirements.

(a) The valves shall be non-rising stem with the stem made of cast, forged, or rolled bronze as specified in AWWA C509.

(b) Two stem seals shall be provided and shall be of the O-ring type.

(c) The stem nut must be independent of the gate.

(4) The resilient sealing mechanism shall provide zero leakage at the water working pressure when installed with the line flow in either direction.

C. Butterfly valves.

(1) General.

(a) All shut-off valves 16 inches and larger shall be butterfly valves.

(b) Butterfly valves and operators shall conform to the AWWA Standard Specifications for Rubber Seated Butterfly Valves, Designation C504, and Class 150A or B.

(c) The face-to-face dimensions shall be in accordance with above mentioned AWWA Specification for short-body valve.

(d) The valve shaft shall be turned, ground, and polished, constructed of 18-8 stainless steel and designed for both torsional and shearing stresses when the valve is operated under its greatest dynamic or seating torque. Shaft shall be of either a one piece unit extending full size through the valve disc and valve bearing or it may be of a stub shaft design.

(2) Material.

(a) The valve body shall be constructed of close grain cast iron per ASTM A126, Class B or equivalent material.

(b) All retaining segments and adjusting devices shall be of corrosion resistant material.

(c) Valve seats shall be a natural rubber or synthetic rubber compound.

(d) Valve seats 30 inches and larger shall be field adjustable and replaceable without dismounting operator disc or shaft and without removing the valve from the line.

(e) All retaining segments and adjusting devices shall be of corrosion resistant material. Valves 24 inches and smaller shall have bonded or mechanically restrained seats as outlined in AWWA C504.

D. Wastewater air/vacuum valve.

(1) Wastewater force mains shall be equipped with either air or air/vacuum release valves located as shown on the drawings.

(2) The valve body shall be stainless steel or reinforced nylon; the floats, float guide and stem shall be of stainless steel Type 304 or 316.

(3) The resilient seat shall be of Buna N.

(4) The valve shall be suitable for 150 psi working pressure.

(5) Valve shall have standard two inch NPT inlets and outlet ports unless otherwise shown on the Drawings.

(6) Provisions shall be made for back-flushing the valve with clean water.

E. Wastewater air release valve.

(1) The valve body and cover shall be cast stainless steel or reinforced nylon, and all internal working parts shall be of stainless steel Type 304 or 316.

(2) The venting orifice shall be 3/8 inch in diameter and the seating material shall be of Viton.

(3) The inlet opening shall be standard two inch NPT screwed connection, unless otherwise shown on the approved plans.

(4) The valve shall include a flushout feature for periodic cleaning of the internal mechanism.

(5) The overall height of the valve body shall not exceed 21 inches, unless otherwise shown on the Drawings. Air release valves shall be installed as shown on the standard details.

(6) The valves shall have a cast iron body, cover and baffle, stainless steel float, bronze water diffuser, Buna-N or Viton seat and stainless steel trim.

(7) Valves shall be provided with a vacuum check to prevent air from reentering the line.

F. Plug valves.

(1) All plug valves shall be installed so that the direction of flow through the valve is in accordance with the manufacturer's recommendations.

(2) Valves shall be of the non-lubricated eccentric type with resilient faced plugs and shall be furnished with end connections as shown on the plans.

(3) Flanged valves shall be faced and drilled to the ANSI 125/150 lb. standard. Mechanical joint ends shall meet AWWA C111, Class B.

(4) Valve bodies shall be of ASTM A126, Class B Semi-steel, 31,000 psi tensile strength minimum in compliance with AWWA C507 and C504. All exposed nuts, bolts, springs, washers, etc. shall be zinc or cadmium plated. Resilient plug facings shall be of Hycar or Neoprene.

(5) Port areas for valves four inches through 20 inches shall be 100 percent nominal pipe diameter. Valves 24 inches and larger shall have a minimum port area of 100 percent of nominal pipe diameter. All exposed nuts, bolts, springs, washers, etc., shall be zinc or cadmium plated. Resilient plug facings shall be of Hycar or Neoprene.

(6) Valves shall be furnished with permanently lubricated stainless steel or oil-impregnated bronze upper and lower plug stem bushings. These bearings shall comply with AWWA C507 and C504.

(7) Seats in four inch and larger valves shall have a welded-in overlay of a high nickel content on all surfaces contacting the plug face which comply with AWWA C507 and C504.

(8) Valve shaft seals shall be adjustable and comply with AWWA C507.

G. Valve testing.

(1) Plug valves shall be tested in accordance with AWWA C504.

(2) Each valve shall meet the performance, leakage, and hydrostatic tests described in AWWA C504.

(3) The leakage test shall be applied to the face of the plug tending to unseat the valve.

(4) The manufacturer shall furnish certified copies of reports covering proof of design testing as described in AWWA C504.

H. Actuators.

(1) Manual valves eight inches and larger shall have gear actuators and tee wrenches or hand wheels, extension stems, floor stands, etc. as indicated on the plans.

(2) All gearing shall be enclosed in a semi-steel housing and be suitable for running in a lubricant with seals provided on all shafts to prevent entry of dirt and water into the actuator.

(3) Actuating nuts shall be two inches square.

(4) All actuator shafts shall be supported on permanently lubricated bronze bearings.

(5) Actuators shall clearly indicate valve position and an adjustable stop shall be provided to set closing torque.

(6) All exposed nuts, bolts, and washers shall be zinc or cadmium plated.

(7) Valve packing adjustment shall be accessible without disassembly of the actuator.

I. Valve boxes.

(1) All buried valves shall have cast-iron three piece valve boxes.

(2) Valve boxes shall be provided with suitable heavy bonnets and shall extend to such elevation at or slightly above the finished grade surface as directed by MCUD.

(3) The barrel shall be two-piece, sliding type, having 5-1/4 inch shaft.

(4) The upper section shall have a flange at the bottom having sufficient bearing area to prevent settling and shall be complete with cast iron covers.

(5) Covers shall have "Water" cast into the top for all water mains.

(6) The actuating nuts for deeper valves shall be extended to come up to four foot below finished grade.

(7) Care shall be taken while constructing valve boxes to ensure that valve stems are vertical and the cast iron box has been placed over the stem with base bearing on compacted fill and top flush with final grade.

(8) Boxes shall have sufficient bracing to maintain alignment during backfilling.

(9) Contractor shall remove any sand or undesirable fill from valve box prior to final inspection.

Sec. 7.2.9 System connection.

A. Tapping sleeves

(1) Tapping sleeves shall be mechanical joint sleeves or stainless steel tapping sleeves.

(2) All pressure connections to existing asbestos cement pipe and all "size on size" taps shall utilize mechanical joint sleeves.

B. Mechanical joint sleeves.

(1) Sleeves shall be cast of gray-iron or ductile-iron and have an outlet flange with the dimensions of the Class 125 flanges shown in ANSI B16.1 properly recessed for tapping valve.

(2) Glands shall be gray-iron or ductile iron.

(3) Gaskets shall be vulcanized natural or synthetic rubber.

(4) Bolts and nuts shall comply with ANSI/AWWA C111/A21.11.

(5) Sleeves shall be capable of withstanding a 200 psi working pressure.

C. Stainless steel tapping sleeves.

(1) The shell, lifter bar, armors and test plug shall be stainless steel in accordance with ASTM A-240, Type 304.

(2) Bolts shall be stainless steel in accordance with ASTM A-193, Type 304. Nuts shall be heavy hex stainless steel in accordance with ASTM A-194, Type 304.

(3) Flange shall be ductile iron, ANSI, Class 150.

(4) Tapping valves shall meet the requirements of Section 7.5.8 except that units shall be flanged by mechanical joint ends. Valves shall be compatible with tapping sleeves as specified above and specifically designed for pressure connection operations.

D. Notification and connection to existing mains.

(1) All connections to existing mains shall be made by the contractor only after the connection procedure and his work scheduling has been reviewed and approved by MCUD.

(2) The contractor shall submit a written request to MCUD a minimum of five working days prior to scheduling said connections outlining the following:

(a) Points of Connection, fittings to be used, method of flushing and disinfection if applicable.

(b) Estimated construction time for said connections.

(3) MCUD shall review the submittal within three working days after receiving it and inform the contractor regarding approval or denial of his request. If his request is rejected by MCUD, the contractor shall resubmit his request modifying it in a manner acceptable to MCUD.

(4) All connections shall only be made on the agreed upon date and time. If the contractor does not initiate and complete the connection work in the agreed upon manner, he shall be required to reschedule the said connection by following the procedure outlined above.

E. Installation

(1) Excavation, backfill, compaction and grading shall comply with the applicable provisions of Section 7.5.4.

(2) Construction details.

(a) Sufficient length of main shall be exposed to allow for installation of the tapping sleeve and valve and the operation of the tapping machinery.

(b) The main shall be supported at sufficient intervals to properly carry its own weight, plus the weight of the tapping sleeve valve and machinery. Any damage to the main due to improper or insufficient supports shall be repaired at the contractor's expense.

(c) The inside of the tapping sleeve and valve, the outside of the main, and the tapping machine shall be cleaned and swabbed or sprayed with ten percent liquid chlorine prior to beginning installation for water system pressure connections.

(d) After the tapping sleeve has been mounted on the main, the tapping valve shall be bolted to the outlet flange, making a pressure tight connection. Prior to beginning the tapping operation, the sleeve and valve shall be pressure tested at 150 psi to ensure that no leakage will occur.

(e) For pressure connections through 12 inches diameter or less the minimum diameter cut shall be ½ inch less than the nominal diameter of the pipe to be attached. For 14 inches through 20 inches, the minimum diameter shall be 1½ inches less. Taps larger than 20 inches shall have an allowable minimum diameter two or three inches less than the nominal diameter of the pipe being attached.

(f) The contractor shall submit the tapping coupon to MCUD.

(g) For pressure connections to wastewater force mains, the tapping valve shall be placed horizontally. After the tapping procedure is complete a plug valve shall be attached to the tapping valve. The tapping valve shall be left in the open position prior to backfilling.

(h) Restrained joint fittings shall be provided to prevent movement of the installation when test pressure is applied.

Sec. 7.2.10 Grease interceptors**.**

A. Grease interceptors shall be sized according to FAC and Section 6.13.2.C(2)(e).

B. Construction

(1) Grease interceptors shall be constructed of pre-cast concrete with base and walls poured monolithically.

(2) Tests to determine water tightness will be required by MCUD, and shall be made by filling the tank with water to the overflow point at the time of inspection.

(3) Metal, block, brick, fiberglass or sectional tanks of any description shall not be permitted.

(4) The interior wall of the grease interceptors shall be finished smooth and impervious. Voids, pits, or protrusions on or in the inside walls of the grease interceptor are prohibited.

(5) Precast concrete grease interceptors shall have a minimum wall and bottom thickness of four inches.

(6) Precast tanks shall be sufficiently reinforced to resist cracking during handling or installation.

(7) Precast grease tanks shall not be located where vehicular traffic or other overburden loads are anticipated unless the design is approved by MCUD, and the registered engineer certifies that the tank and soil conditions will support the anticipated loads. Where support is provided without bearing on the tank, bearing shall be on the soil independent from the grease tank and reinforced as specified by the engineer.

(8) Tops shall be traffic rated or non-traffic rated.

(9) Tanks shall be so located and installed as to provide ready accessibility to the tanks covers, and interior for ease in inspection, operation and maintenance of the tank.

(10) Minimum inlet and outlet piping size is four inches.

(11) Minimum slope for all tank inlet and outlet piping is 1/8 inches per foot.

(12) All openings shall be sealed with a waterproof, non-shrinking grout, brushed smooth inside and outside.

(13) Tanks located in areas of questionable drainage are required to have a waterproof type frame and cover, with a manhole insert.

(14) Precast structures shall be inspected by MCUD prior to being set into the ground. Any visible reinforcing wire, steel, or honeycombing shall be cause for rejection.

C. Maintenance access

(1) Maintenance shall be according to MCUD Industrial Pretreatment Ordinance, as amended.

(2) Clean outs shall be provided and installed in conformance with MCUD's specifications at both the inlet and outlet to the tank(s).

(3) Access to the tank(s) for cleaning and inspection shall be provided via a minimum of two, 24 inch diameter rings and covers, located at each end (inlet and outlet) of the tank. The cover shall have the words GREASE cast into it.

Sec. 7.2.11 Industrial Pretreatment shall comply with the Marion County Industrial Pretreatment requirements specified in the Marion County Code of Ordinances Chapter 19, Article II, Industrial Pretreatment, as amended.

Sec. 7.2.12 Security

A. General

(1) All facilities shall be locked to prevent unauthorized access.

(2) All access by non-utility personnel shall be approved by the utility operator prior to entrance to facility.

(3) All fencing fabric shall be chain link.

(4) Fence requirements: Refer to Section 7.1.2.G.

B. Gates

(1) Swing gates shall be two, six foot wide double hung gates.

(2) Gates shall be hinged to swing through 180° from closed to open and shall be complete with latches, locking device, stops keeper, hinges, fabric and braces.

(3) Gates shall be the same height as the fence and the gate fabric shall be the same as the fence fabric.

(4) Gate leaves less than eight feet wide shall have truss rods or intermediate braces and gate leaves eight feet or more in width shall have intermediate braces and diagonal truss rods or shall have tubular members as necessary to provide rigid construction, free from sag or twist.

(5) Gate locks

(a) All facility gates shall remain locked at all times.

(b) MCUD shall supply locks for all MCUD owned facilities.

C. Lighting and cameras

(1) All facility sites shall be equipped with adequate lighting as specified by MCUD.

(2) All lift stations shall have a pole mounted light, connected to the electrical control panel.

(3) Cameras shall be used when determined necessary by MCUD.

Sec. 7.2.13 Water distribution.

A. PVC pipe, joints and fittings

(1) PVC pipe of nominal diameter, four to 12 inches shall be manufactured in accordance with AWWA Standard C900, latest edition.

(2) All PVC pipe shall be DR 18. Pipe shall be the same outside diameter as ductile iron pipe.

(3) Pipes 14 inches diameter and larger shall be manufactured in accordance with AWWA Standard C905, latest edition.

(4) PVC pipe shall have integral bell push on type joints conforming to ASTM D3139.

(5) Fitting joints shall be push-on or mechanical joints conforming to ANSI/AWWA A21.11/C111. Where called for in the approved plans, restrained or flanged joints shall be provided.

(6) Flanged joints shall conform to ANSI Standard B 16.1-125 LB.

(7) Restrained joints shall conform to the standard drawings.

B. Ductile Iron Pipe and Fittings

All ductile iron pipe of nominal diameter four to 20 inches shall be Class 350, pipe sizes larger than 20 inches shall be Class 250 and shall conform to ANSI/AWWA A21.51/Cl5l.

C. All fittings shall be mechanical joint ductile iron or gray iron conforming to ANSI/AWWA A21.10/C110, 250 Psi minimum pressure rating, or ductile iron compact fittings in accordance with ANSI/AWWA A21.53/C153.

D. Service pipe, stops, fittings, and service saddles

(1) All service lines shall be 1½ inches or two inches polyethylene tubing conforming to specifications in AWWA C800 and AWWA C901.

(2) All service lines shall be sleeved in schedule 40 PVC a minimum of one inch larger than the service pipe.

(3) Corporation stops shall be one inch, 1½ inches or two inches brass, equipped with connections compatible with the polyethylene tubing and threaded in accordance with specifications in AWWA C800 and AWWA C901. Curb stops shall be sized to match the meter size and conform to the specifications in AWWA C800 and AWWA C901.

(4) Fittings shall be brass, cast and machined in accordance with specifications in AWWA C800 and AWWA C901, with compatible polyethylene tubing connections.

(5) Service saddles.

(a) A service saddle shall be used for all service line taps.

(b) Service saddles shall be double stainless steel straps and fusion epoxy or nylon coated ductile iron body with stainless steel hardware.

(c) Service saddles shall be anchored by a minimum four bolt pattern on a ductile iron saddle body.

(d) Service saddles for PVC pipe shall have the double strap sized exactly to the pipe outside diameter.

(e) Sealing gaskets shall be BUNA-N rubber and straps shall be corrosion resistant alloy steel.

E. Pipe crossings

(a) Water mains shall be above the sewer or reclaimed water pipe whenever they cross.

(b) Adequate structural support for both the water main and sewers shall be provided to prevent excessive deflection of joints and settling.

(c) The length of PVC or ductile iron pipe being crossed shall be minimum 18 feet. The point of crossing shall be centered so that the joints will be equidistant and as far as possible from the water main.

F. Disinfection of water mains

(1) Before being placed in service, all new water mains shall be chlorinated in accordance with the specifications below and the procedures outlined in AWWA C651 "Standard Procedure for Disinfecting Water Mains".

(2) Flushing.

(a) Sections of pipe to be disinfected shall first be flushed (full diameter) to remove any solids or contaminated material that may have become lodged in the pipe.

(b) If no hydrant is installed at the end of the main, then a blow-off valve shall be provided and sized to develop a velocity of at least 2.5 feet per second in the main.

(c) All taps required for chlorination or flushing purpose, or for temporary or permanent release of air shall be provided for by the contractor as a part of the construction of water mains. After the disinfection, all such taps two inches and smaller shall be plugged with a brass plug in the tapping sleeve and those larger than two inches will be valved and blind flanged.

(3) Disinfection criteria.

(a) Before being placed into service, all new mains and repaired portions of, or extensions to existing mains shall be disinfected using chlorine and must successfully pass bacteriological testing.

(b) Chlorine shall be applied as liquid chlorine, or a mixture of water and high-test calcium hypochlorite as specified in AWWA B300. Contractor shall assume responsibility for safe handling of chlorine and shall meet requirements of OSHA and other regulatory agencies for safe handling of chlorine.

(c) The point of application of the chlorinating agent shall be at the beginning of the pipe line extension or any valved section of it, through a corporation stop inserted in the pipe. The water injector for delivering the chlorine-bearing water into the pipe shall be supplied from a tap made on the pressure side of the gate valve controlling the flow into the pipe line extension. Alternate points of applications may be used when approved or directed by MCUD.

(d) Valves shall be manipulated by MCUD personnel so that the strong chlorine solution in the line being treated will not flow back into the line supplying the water.

(e) Treated water shall be retained in the pipe at least 24 hours. After this period, the chlorine residual at pipe extremities and at other representative points shall be at least 25 mg/l.

(f) All valves or other appurtenances shall be operated while the pipe line is filled with the chlorinating agent and under normal operating pressure.

(g) All chlorinated water shall be thoroughly flushed from the newly laid pipe at its extremity until the replacement water throughout its lengths shows a free chlorine residual not in excess of that normally carried in the system.

(h) Water samples collected on two consecutive days after flushing the treated piping system as described in FAC 62-555.

(i) The original chlorination procedure shall be repeated as necessary by the contractor until satisfactory test results are obtained.

(j) The developer may request testing by a private laboratory in order to expedite testing. All such bacteriological analysis must be performed by a laboratory certified by the State of Florida.

(k) Proper chain of custody procedures must be followed and samples shall only be collected by certified personnel in the presence of MCUD personnel.

(l) Copies of testing results and all related correspondence with the FDEP shall be submitted to MCUD.

G. Fire hydrants.

(1) Material.

(a) Fire hydrants shall comply with AWWA Standard C502 for fire hydrants for water works service and capable of producing 1,500 gpm of flow.

(b) Each hydrant shall have 6 inches mechanical joint ends with harnessing lugs ("dog ears") and shall open by turning to the left (counter-clockwise).

(c) Fire hydrant shall be of ample length for 42 inches depth of bury. It shall be provided with two 2-1/2 inch hose nozzles and one 4-1/2 inch pumper nozzle, all having National Standard hose threads.

(d) Nozzles shall have caps attached by chains.

(e) Operating nuts shall be AWWA Standard (pentagonal, measuring 1-1/2 inches point to flat).

(f) Fire hydrants shall be equipped with "O-Ring" packing.

(2) Painting.

(a) All iron parts of the hydrant both inside and outside shall be painted, in accordance with AWWA C502.

(b) All inside surfaces and the outside surfaces below the ground line shall be coated with asphalt varnish in accordance with AWWA C550.

(c) They shall be covered with two coats, the first having dried thoroughly before the second is applied.

(d) The outside of the hydrant above the finished ground line shall be thoroughly cleaned and thereafter painted with one coat of paint of a durable composition, and one additional coat of red paint.

(e) Bonnets shall be painted in accordance with fire requirements as specified in Section 6 Fire.

(3) Construction details.

(a) Hydrants shall be plumb and shall be set so that the center of the lowest hose connection is at least 18 inches above the surrounding finished grade.

(b) All hydrants shall be inspected in the field upon delivery to the job site to insure proper operation before installation.

(c) The resetting, moving, or reconnecting of existing hydrants shall be handled in a manner similar to a new installation.

(d) Hydrant shall be constructed in accordance with the standard details.

(e) Fire hydrants shall be located at a maximum of 1,000 foot intervals as measured along the length of the right-of-way.

(f) Final field location of all hydrants shall be as approved by MCUD.

(g) All hydrants shall be located not less than 7 feet from any physical feature which may obstruct access or view of any hydrant unless otherwise approved by MCUD.

H. Water meters.

Water meters shall be furnished by MCUD at the contractor's expense.

Sec. 7.2.14 Water Wells

All water well development shall comply with FAC.

Sec. 7.2.15 Wastewater Collection System

A. Gravity sewers.

(1) General

Pipe used in gravity sewer construction shall be polyvinyl chloride (PVC) or ductile iron pipe (DIP). Where reference is made to an ASTM, ANSI or AASHTO designation, it shall be the latest revision.

(2) Pipe materials

(a) PVC gravity sewer pipe.

1. PVC gravity sewer pipe (4 - 15 inches), ASTM D3034, Standard Dimension Ratio (SDR) 26. Uniform minimum "pipe stiffness" at five percent deflection shall be 46 psi. The joints shall be integral bell elastomeric gasket joints manufactured in accordance with ASTM D3212 and ASTM F477. Applicable Uni-Bell Plastic Pipe Association standard is UNI-B-4.

2. PVC gravity sewer pipe (18 - 27 inches), ASTM F679, SDR 26. Uniform minimum "pipe stiffness" at five percent deflection shall be 46 psi. The joints shall be integral bell elastomeric gasket joints manufactured in accordance with ASTM D3212 and ASTM F477. Applicable Uni-Bell Plastic Pipe Association standard is UNI-B-7.

3. All PVC pipe shall bear the NSF-DW seal. The minimum standard length of pipe shall be 13 feet.

(b) DIP gravity sewer pipe.

1. Ductile iron pipe shall conform to ANSI/AWWA A21.51/Cl5l, class thickness designed per ANSI/AWWA A21.50/C15O, with mechanical or push on joints.

2. All ductile iron pipe with diameters of 4 to 20 inches shall have a pressure rating of 350 psi.

3. Ductile iron pipe 24 inches and larger shall have a pressure rating of 300 psi.

(3) Joint materials.

(a) PVC sewer pipe joints shall be flexible elastomeric seals per ASTM D 3212.

(b) Ductile iron pipe and fitting joints shall be "push-on" or mechanical joints conforming to ANSI/AWWA A21.11/C110.

(c) Joints between pipes of dissimilar materials shall be made with a flexible mechanical compression coupling with No. 304 stainless steel bands.

(4) Fittings.

(a) All fittings shall be designed for use on the pipe material being installed.

(b) Wyes shall be provided in the gravity sewer main for service lateral connections, unless otherwise specified.

(c) Wyes shall be 6 inches inside diameter, unless otherwise approved by MCUD. Plugs for stub outs shall be of the same material as the pipe, and gasketed with the same gasket material as the pipe joint, or be of material approved by MCUD. The plug shall be secured to withstand test pressures specified in this Section.

(d) Plugs for pipe branches, stubs or other open ends which are not to be immediately connected shall be made of an MCUD approved material and shall be secured in place with a joint comparable to the main line joint.

(5) Pipe bedding

(a) Contractor shall ensure pipe is properly bedded to proper grade ahead of pipe laying operation. Bedding shall provide a firm, unyielding support along the entire pipe length.

(b) Where the trench has been excavated below the required depth for pipe bedding material placement, contractor shall fill the excess depth with pipe bedding material to the proper grade, unless excavation depth was directed by MCUD.

(c) Contractor shall excavate bell holes at each joint to permit proper assembly and inspection of the entire joint.

B. Manholes.

(1) General

(a) Manholes shall be leak-tight and constructed of pre-cast concrete units.

(b) A 10 foot wide access road shall be provided for all manholes which are located outside of county roadways. The top eight inches of the access road shall be stabilized to accommodate heavy vehicles.

(c) Concrete surfaces shall have form oil, curing compounds, dust, dirt and other interfering materials removed by brush or sand blasting.

(d) Interior surfaces of manholes shall have a protective MCUD approved coating with a minimum dry mil thickness of 16 mils. Exterior surfaces shall have a protective MCUD approved coating with a minimum dry mil thickness of nine mils. Coatings shall be applied in two applications by the manhole manufacturer in strict accordance with the paint manufacturer's recommendations.

(e) The minimum wall shall be five inches, and have a minimum base of eight inches. Pre-cast manholes shall be constructed in compliance with the standard details.

(2) Manholes shall be hydraulically tested using the method specified in ASTM C969. All manholes shall be inspected by MCUD prior to acceptance. All manholes failing to meet the specifications set forth above shall be reconstructed or replaced by the contractor to comply with these specifications. Pressure grouting of manholes for repair shall not be accepted.

(3) Pre-Cast base and manholes.

(a) A pre-cast base section shall be carefully placed on the prepared bedding so as to be fully and uniformly supported in true alignment and making sure that all entering pipes can be inserted on proper grade.

(b) Pre-cast manhole sections shall be handled by lift rings or non-penetrating lift holes. Such holes shall be filled with non-shrink grout after installation of the manhole.

(c) The first pre-cast section shall be placed and carefully adjusted to true grade and alignment. All inlet pipes shall be properly installed so as to form an integral watertight unit. The sections shall be uniformly supported by the base structure, and shall not bear directly on any of the pipes.

(d) Pre-cast sections shall be placed and aligned to provide vertical alignment with a one-fourth inch maximum tolerance per five feet of depth. The completed manhole shall be rigid, true to dimensions, and watertight.

(e) Base sections shall be placed on bedding rock conforming to the requirements in Section 7.5.4. The bedding rock shall be firmly tamped and made smooth and level to assure uniform contact and support of the pre-cast element. Refer to the standard details for additional bedding details.

(4) Pre-Cast concrete sections

(a) Pre-cast manholes shall conform to specifications for pre-cast reinforced concrete manhole sections, ASTM designation C478.

(b) Concrete for manholes shall be Type II, 4000 psi at 28 days.

(c) Barrel, top and base sections shall have tongue and groove joints.

(d) All jointing material shall be cold adhesive preformed plastic gaskets, conforming to FDOT specifications.

(e) The date of manufacture and the name or trademark of the manufacturer shall be clearly marked on each pre-cast section.

(f) Sections shall be cured by an industry approved method for at least 28 days prior to painting and shall not be shipped until at least two days after having been painted.

(g) Pre-cast concrete top slabs shall be used where cover over the top of the pipe is less than four feet.

(h) Lift rings or non-penetrating lift holes shall be provided for handling pre-cast manhole sections. Non-penetrating lift holes shall be filled with non-shrink grout after installation of the manhole sections. Sections rejected after delivery to the job shall be marked for identification and shall be removed from the job at once. All sections which have been damaged after delivery will be rejected and, if already installed, removed and replaced, entirely at the contractor's expense.

(i) At the time of inspection, the sections will be carefully examined for compliance with the specified ASTM designation, and with the approved manufacturer's drawings. All sections shall be inspected for general appearance, dimension, "scratch-strength" blisters, cracks, roughness, soundness, etc. The surface shall be dense and close-textured.

(5) Castings.

(a) Gray iron castings for manhole frames, covers, adjustment rings and other items shall conform to FDOT Standard Specifications for Road and Bridge Construction as amended.

(b) Castings shall be true to pattern in form and dimensions and free of pouring faults and other defects which would impair their strength, or otherwise make them unfit for the service intended.

(c) The seating surfaces between frames and covers shall be machined to fit true. No plugging or filling will be allowed. Lifting or "pick" holes shall be provided, but shall not penetrate the cover.

(d) Casting patterns shall conform to those shown or indicated on the standard details.

(e) Frames shall be suitable for the future addition of a cast iron ring for upward adjustment of top elevation. In certain locations bolt down covers and gasketed covers shall be located as

shown on the drawings (i.e.: flood prone areas).

(f) Casting shall be fully bedded in mortar with adjustment brick courses placed between the frame and manhole. Bricks shall be a minimum two and maximum four courses. Mortar shall conform to ASTM C-270, type M, and the bricks shall be clay and conform to ASTM C-216, grade SW, size 3 1/2 inches (w) x eight inches (l) x 2 1/4 inches.

(g) Top of manhole castings located in pavement, shouldered areas, and sidewalks shall be set flush with grade. Top of manhole castings located outside these areas shall be placed two inches above grade.

(6) Flow channels and piping

(a) Manhole flow channels shall be as shown in the standard details, with smooth and carefully shaped bottoms, built up sides and benching constructed using cement and brick with no voids. Channels shall conform to the dimension of the adjacent pipe and provide for evenly changes in size, grade and alignment. Cement shall be Portland Cement Type II only.

(b) Special care shall be taken to see that the openings through which pipes enter the structure are provided with watertight connections. For ductile iron and PVC pipe, connections shall conform to ASTM C 923.

(c) Drop manhole connections shall conform in all respects to details shown on the standard details.

(d) All newly constructed manholes shall be cleaned of any accumulation of silt, debris, or foreign matter of any kind, and shall be free from such accumulations at the time of final inspection.

(e) No visible leakage in the manhole or at pipe connections shall be permitted.

(f) The flow channel through manholes shall be made to conform in shape and slope to that of the sewers. Vertical and/or horizontal flow direction changes in excess of 90° shall not be included in sewer alignments without MCUD approval.

C. Wastewater service laterals.

(1) General

(a) Service laterals and fittings shall be a minimum of 6 inches in diameter.

(b) Pipe, fittings and joints shall be PVC DR26 or DI pipe and shall conform to the requirement for gravity sewer construction in this code.

(c) Service laterals shall be connected using a wye fitting, as shown in the standard details.

(d) On existing mains where no wye is provided or available, connection shall be made by either a machine-made tap and suitable saddle, or a cast-in-place doghouse manhole.

(2) Construction details

(a) Excavation and backfilling for service sewers shall conform to the requirements of Section 7.5.4, except that no backfill in excess of that required to hold the pipe in true alignment shall be placed prior to inspection.

(b) Pipe laying and jointing, except as hereinafter provided, shall in general conform to the requirements of Section 7.5.13. During the pipe laying and jointing, the service lateral shall be kept free of any water, dirt or objectionable matter.

(c) Pipe shall be laid with a minimum slope in accordance with Table 6.15.3. Pipe shall be laid in a straight line at a uniform grade between fittings.

(d) Service laterals shall terminate at the right-of-way line in accordance with the standard details. Water-tight factory made plug(s) shall be installed in the clean out at the end of each service lateral.

(e) Service sewers laterals shall meet the inspection requirements specified in Section 7.5.15.D.

(f) The contractor shall restore all paved surfaces, curbing, sidewalks or other surfaces to their original or better condition. All surplus material and temporary structures, as well as all excess excavation shall be removed and the entire site shall be left in a neat and clean condition.

(g) The exact location of the termination point of each installed service lateral shall be marked by etching or cutting an "S" in the concrete curb. Where no curb exists, locations shall be adequately marked by a method approved by MCUD. Brass or aluminum markers may also be used.

D. Testing and inspection for acceptance of gravity sewers shall comply with Section 7.5.7.F.

E. Wastewater force mains.

(1) General.

Pipe used in wastewater force main systems shall be either PVC or DIP.

(2) Pipe and fittings

(a) PVC pipe.

1. Pipe four to 12 inches diameter shall be manufactured in accordance with AWWA standard C900, latest edition and have a DR of 25.
2. The PVC pipe shall have a minimum working pressure rating of 100 psi.
3. Pipe shall be the same outside diameter as ductile iron pipe.
4. Pipe 14 inches diameter and larger shall be manufactured in accordance with AWWA Standard C905, Latest Edition, and shall have a DR of 25.
5. All PVC pipe under pavement must be sleeved or meet FDOT Standard Specifications for Road and Bridge Construction as amended.
6. Pipe shall have integral bell push on type joints conforming to ASTM D3139.
7. Pipe fittings used with PVC pipe shall conform to Section 7.5.13.B.

(b) Ductile iron pipe

1. All ductile iron pipe of nominal diameter four to 20 inches shall be Class 350, pipes larger than 20 inches shall be Class 250 and shall conform to ANSI/AWWA A21.51/Cl5l.
2. All fittings shall be mechanical joint ductile iron or gray iron conforming to ANSI/AWWA A21.10/C110, 250 psi minimum pressure rating, or ductile iron compact fittings in accordance with ANSI/AWWA A21-53/Cl53.
3. Joints for ductile iron pipe and fittings shall be push-on or mechanical joints conforming to ANSI/AWWA A21.11/C111, unless otherwise called for on the DRAWINGS. Restrained or flanged joints shall be provided where specified on the Drawings. Flanged joints shall conform to ANSI Standard B16.1-125 LB. Restrained joints shall conform to the tables in the standard drawings.

(3) Force main construction. Requirements specified in Section 7.5.6. shall apply.

(4) Hydrostatic tests. Requirements specified in Section 7.5.7.F. shall apply except that all pipe sections to be tested shall be subjected to a hydrostatic pressure of 100 psi.

(5) Final cleaning.

(a) Prior to final inspection and acceptance of the force main by MCUD, the contractor shall flush and clean all parts of the system.

(b) Flushing and cleaning shall remove all accumulated construction debris, rocks, gravel, sand, silt, and other foreign material from the sewer system at or near the downstream end.

F. Upon MCUD's final inspection of the pressure pipe systems, if any foreign matter is still present in the system, contractor shall clean the sections and portions of the lines as required.

Sec. 7.2.16 Lift Stations

A. Site

(1) Lift Station sites shall be minimum 50 feet by 50 feet, unless otherwise determined by MCUD.

(2) Lift Station sites shall be conveyed to MCUD through a developer's agreement.

(3) The boundary of all new lift stations shall be located a minimum of 50 feet away from any vertical structure.

(4) Site shall have a six inches x 18 inches concrete curb around the perimeter as shown in the construction details, except at the gates.

(5) Chain link fencing that complies with Section 7.5.12 shall be set in the centerline of the curb.

(6) All pervious area shall be covered with 4 inches of FDOT #57 stone, with a 60 mil geofabric weed control liner underneath. The stone shall be flush with the wet well elevation.

(7) The concrete driveway shall be 14 feet wide and six inches thick with six inch x six inch welded wire fabric. The concrete shall have a minimum strength of 3,000psi.

B. Access

Where no paved access is existing to the lift station site, a 12 foot wide paved asphalt access road (1.5 inch thick FDOT SP-9.5 Asphaltic Concrete, six inch thick LBR 40 Limerock Base, and six inch thick FBV 75 Sub-Base) shall be provided by the developer.

C. Construction

(1) Wet wells to be owned and operated privately shall comply with all applicable Federal, state, and local regulations for construction and connection to central service.

(2) Wet wells to be conveyed to MCUD shall comply with all applicable federal, state, local regulations, and the engineered design approved by MCUD.

Sec. 7.2.17 Reclaimed Water Systems

A. These specifications cover the pipe, fittings, and accessory items used for reclaimed water transmission and distribution systems.

(1) Pipe used in reclaimed water transmission and distribution systems shall either be PVC, DIP, or HDPE.

(2) All PVC pipe and appurtenances shall be solid color Pantene Purple 522-C. All DIP and HDPE pipe and appurtenances shall be marked per Section 7.5.19.B.2.

(3) The contractor shall be responsible for all materials furnished and storage of same, until the date of substantial completion.

(4) The contractor shall replace at his own expense all materials found to be defective or damaged in handling or storage.

(5) The contractor shall, if requested by MCUD, furnish certificates, affidavits of compliance, test reports, or samples for check analysis for any of the materials specified herein.

(6) All pipe delivered to the project site for installation is subject to random testing for compliance with the designated specifications.

(7) The reclaimed water pipe shall be inspected and tested as required in Section 7.5.7.F.

B. Pipe materials

(1) PVC pipe.

(a) All PVC pipe of nominal diameter four to 12 inches shall be manufactured in accordance with AWWA standard C900, latest edition, and shall have a DR18.

(b) Pipe 14 inches diameter and larger shall be manufactured in accordance with AWWA C905, latest edition, and shall have a DR18.

(c) PVC pipe shall have the same outside diameter as DIP.

(d) All PVC pipe under pavement must be sleeved, as required.

(e) PVC pipe shall have integral bell push on type joints conforming to ASTM D3139.

(f) Fittings used with PVC pipe shall conform to Section 7.5.13.B.

(2) Ductile iron pipe and fittings

(a) All DIP of nominal diameter four to 20 inches shall be Class 350. Pipe larger than 20 inches shall be Class 250 and shall conform to ANSI/AWWA A21.51/C151.

(b) Any fittings required shall be mechanical joint ductile iron or gray iron conforming to ANSI/AWWA A21.10/C110, 250 psi minimum working pressure rating, or ductile iron compact fittings in accordance with ANSI/AWWA A21.53/C153.

(c) Joints for DIP and fitting joints shall be push-on or mechanical joints conforming to ANSI/AWWA A21.11/C111. Where called for in the plans, restrained or flanged joints shall be provided. Flanged joints shall conform to ANSI Standard B16.1-125 lb. Restrained joints shall conform to the tables in the standard details.

(d) Primer and field coats shall be compatible and shall be applied in accordance with the manufacturers' recommendations.

(e) All DIP reclaimed water mains shall be marked with a continuous stripe located within the top 90° of the pipe. The stripe shall be a minimum two inches in width and shall be Pantone Purple 522-C in color. Backfill shall not be placed for 30 minutes following paint application.

(f) DIP shall be polyethylene encased (8 mil) where shown on the drawings or required by MCUD in accordance with ANSI/AWWA A21.51/C105.

C. Pipe installation for reclaimed water mains.

(1) Pipe shall be installed in accordance with the manufacturer's specifications and instructions for the type of pipe used and applicable AWWA standards, such as AWWA 600 and C603, unless otherwise stated in these specifications.

(2) All pipe, fittings and appurtenances shall be handled in such a manner as will prevent damage as specified in Section 7.5.7.B.

(3) When reclaimed water mains are laid in the vicinity of pipe lines designated to carry potable water or raw wastewater they shall meet horizontal and vertical separation distance requirements specified in Section 7.5.7.E.

(4) The trench preparation and bedding for the reclaimed water main shall meet the requirements specified in Section 7.5.4.E.

(5) Hydrostatic testing of the reclaimed water mains shall comply with the requirements specified in Section 7.5.7.F.

(6) Before being placed into service, all new reclaimed water mains shall be chlorinated in accordance with Section 7.5.13.3. However, bacteriological tests will not be required.

D. Service lines, stops, fittings and service saddles

(1) Service line shall be one inch, 1-1/2 inches or two inches polyethylene tubing conforming to specifications in AWWA C800 and AWWA C901. Service lines four inches and above shall be PVC pipe conforming to paragraph c.(1) above. All service line shall be lavender in color.

(2) Corporation stops shall be one inch, 1-1/2 inches or two inch brass, equipped with connections compatible with the polyethylene tubing and threaded in accordance with specifications in AWWA C800 and AWWA C901. Curb stops shall be sized to match the meter size and conform to

the specifications in AWWA C800 and AWWA C901.

(3) Fittings shall be brass, cast and machined in accordance with specifications in AWWA C800 and AWWA C901, with compatible polyethylene connections.

(4) Service saddles shall be used for all service line taps. Service saddles shall be double stainless steel straps, anchored by a minimum four bolt pattern on a ductile iron saddle body. Service saddles for PVC pipe shall have the double strap sized exactly to the pipe outside diameter. Sealing gaskets shall be BUNA-N rubber.

(5) MCUD may require fusion epoxy or nylon coated ductile iron body with stainless steel hardware in areas designated as corrosive.

E. Location and identification.

(1) Service lines.

(a) The location of all service lines shall be as shown on the drawings and shall be either single or dual service.

(b) Curbed streets shall be marked by etching or cutting a "RW" in the concrete curb for each installed service.

(c) Where no curb exists, locations shall be adequately marked by a method approved by MCUD.

(2) Water mains

(a) All non-metallic reclaimed water mains shall be installed with a continuous, insulated 14 gauge copper wire installed directly on top of the pipe for location purposes.

(b) Detectable tape may be used in lieu of copper wire and shall be placed one foot above the top of the pipe. See standard details.

(c) All lettering shall appear legibly on pipe and shall run the entire length of the pipe.

(d) Lettering shall read as is acceptable for the intended use.

F. Valves, hydrants and accessories for reclaimed water mains.

(1) The resilient seat gate valves shall meet the requirements of AWWA C509 and the Section 7.5.8.B.

(2) All shut-off valves 16 inches and larger shall be butterfly valves and shall conform to the AWWA C504 and Section 7.5.8.C. of these Specifications.

(3) All valves shall be inspected and installed in accordance with the AWWA Standards for the type of valve and connection and shall comply with the requirements specified in Section 7.5.8.

(4) All buried valves shall have cast-iron three piece valve boxes and shall comply with the requirements specified in Section 7.5.8., except that covers shall have "Reclaimed Water" cast into the top.

(5) The air release valves for use in the reclaimed water mains shall be installed as shown on the Standard Drawings and shall comply with the requirements specified in Section 7.5.8.E.

(6) Fire hydrants installed on the reclaimed water mains shall meet the requirements specified in Section 6.17 except that the exterior barrel color shall be Pantene purple 522-C, and the cap colors shall reflect the pressure rating of the hydrant.

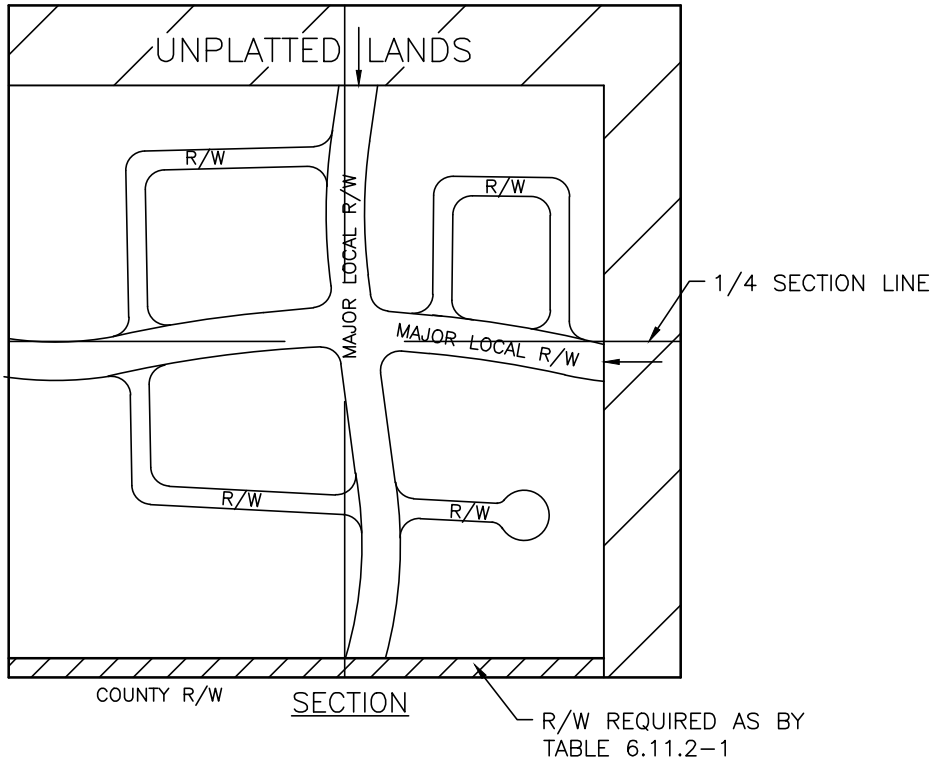

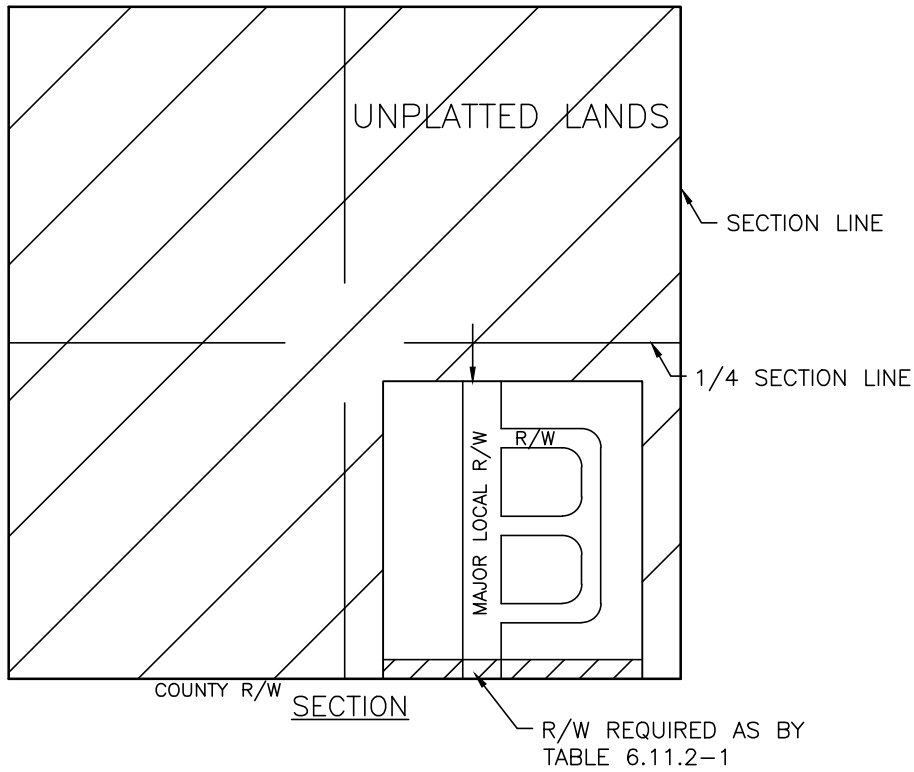

LEGEND

R/W	RIGHT-OF-WAY
	RIGHT-OF-WAY REQUIRED ON SECTION AND QUARTER-SECTION LINES (SEE TABLE 6.11.2-1)
	ACCESS TO BE PROVIDED TO ADJACENT UNPLATTED LAND
	PROPOSED DEVELOPMENT BOUNDARY

Marion County FLORIDA OFFICE OF THE COUNTY ENGINEER	MCBCC ADOPTED XX/XX/XX REVISION #	ACCESS TO ADJACENT UNPLATTED LANDS	7 EN 001

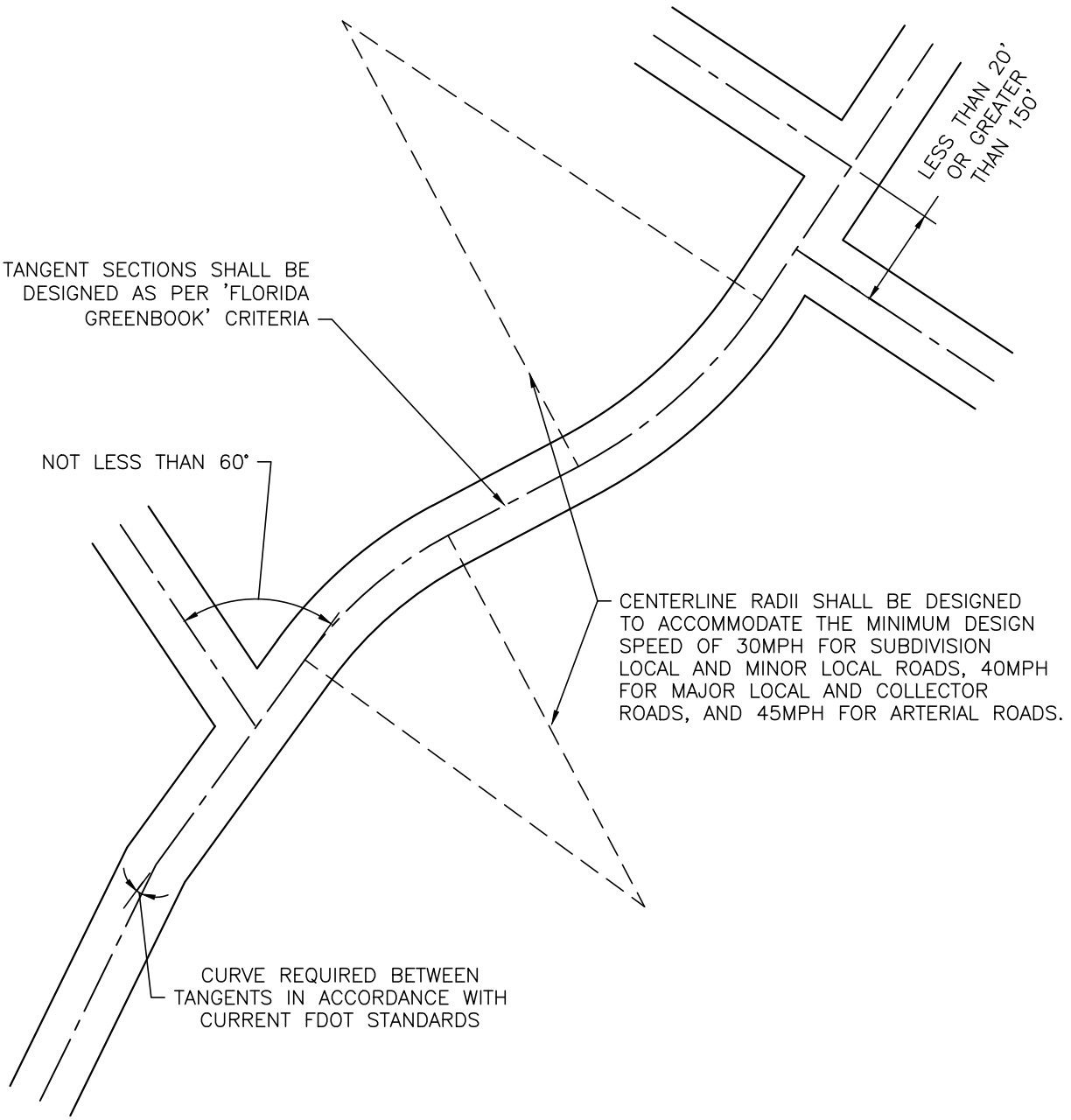

Marion County FLORIDA OFFICE OF THE COUNTY ENGINEER	MCBCC ADOPTED XX/XX/XX REVISION #	SUBDIVISION MINIMUM CENTERLINE RADII, INTERSECTION DEFLECTION LIMITS, OPPOSING INTERSECTIONS	7 EN 002

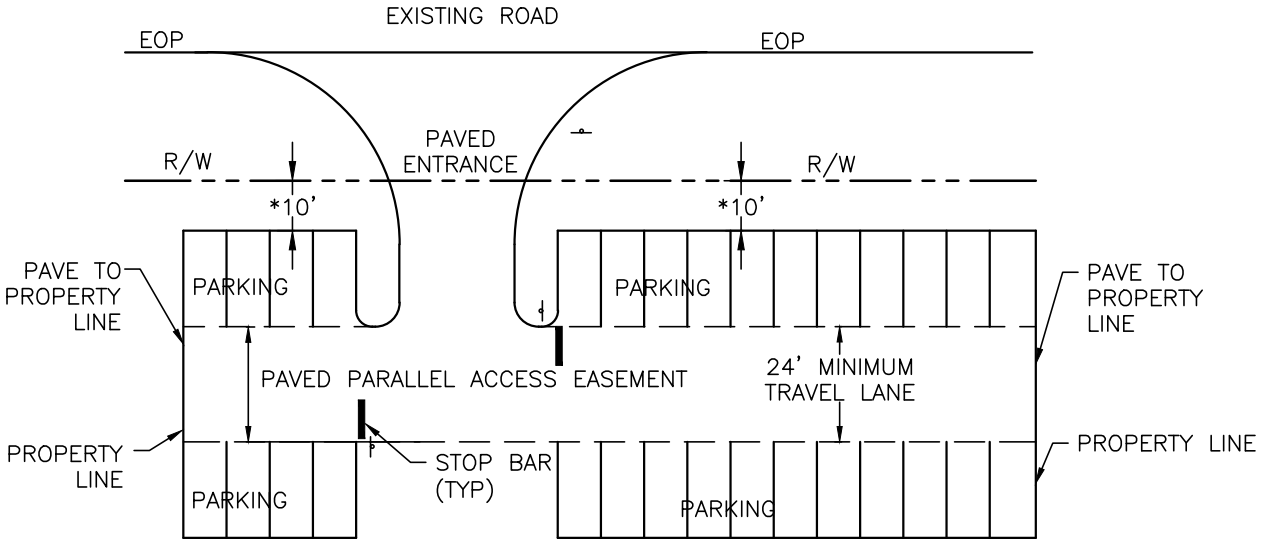

COMMERCIAL/INDUSTRIAL SITE

NOTES:

1. NEW PAVED PARALLEL ACCESS SHALL BE CONNECTED TO ANY EXISTING PARALLEL ACCESS ON ADJOINING PROPERTY
2. * AREA WILL BE USED FOR SIDEWALK AND BUFFER AS APPLICABLE.

LEGEND

R/W	RIGHT OF WAY
⊸	STOP SIGN REQUIRED
EOP	EDGE OF PAVEMENT
(TYP)	TYPICAL

Marion County FLORIDA OFFICE OF THE COUNTY ENGINEER	MCBCC ADOPTED XX/XX/XX	PARALLEL ACCESS	7
	REVISION #		EN 003

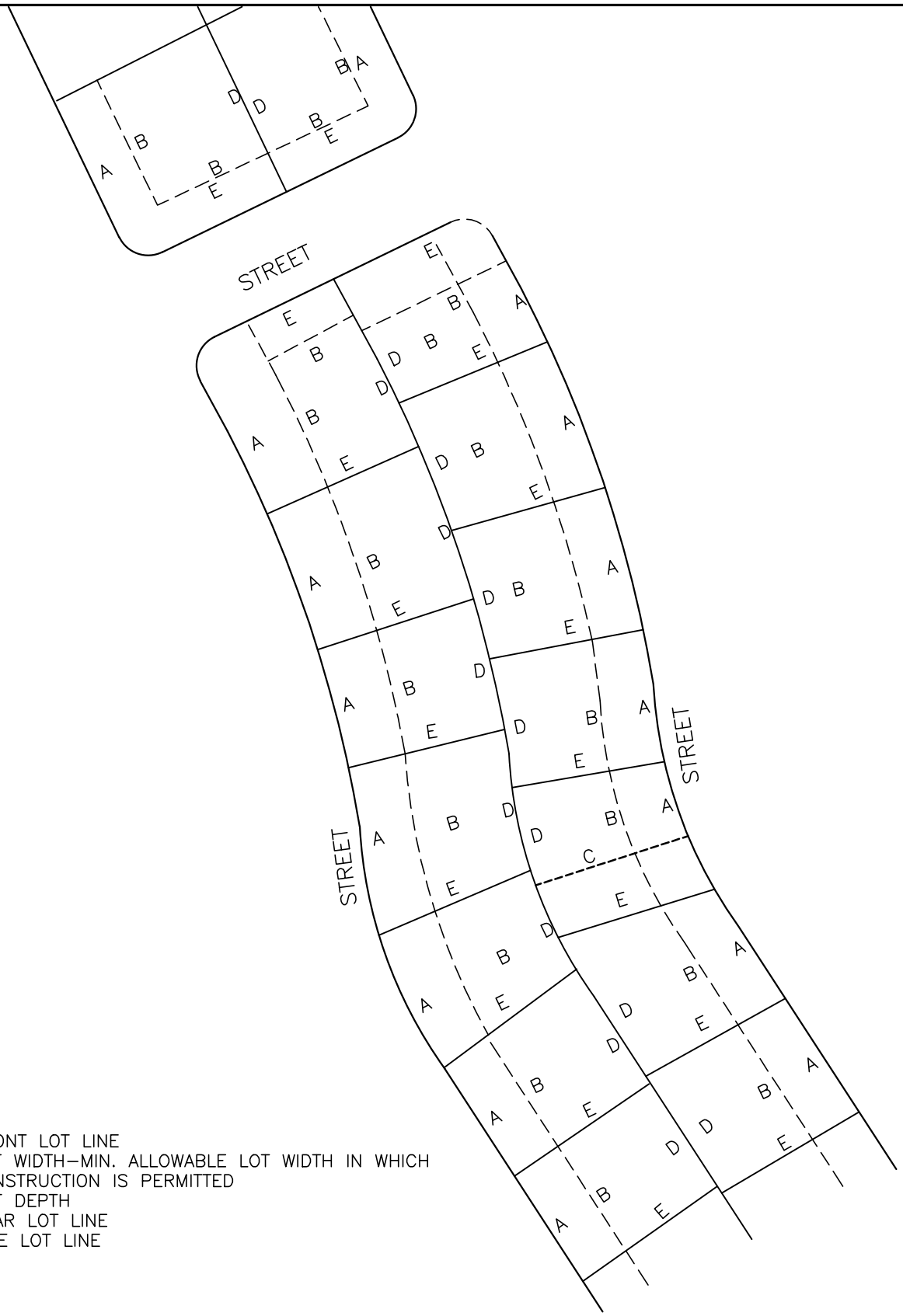

LEGEND
A = FRONT LOT LINE
B = LOT WIDTH–MIN. ALLOWABLE LOT WIDTH IN WHICH CONSTRUCTION IS PERMITTED
C = LOT DEPTH
D = REAR LOT LINE
E = SIDE LOT LINE

NOTE:
ALL LOT DIMENSIONS AND SETBACKS SHALL COMPLY WITH ARTICLE 4 OF THIS CODE AND HEALTH DEPARTMENT REGULATIONS.

Marion County FLORIDA OFFICE OF THE COUNTY ENGINEER	MCBCC ADOPTED XX/XX/XX REVISION #	LOT LINES & BUILDING LINES	7 EN 004

SUBDIVISION GROUP	R1	R2	R3	R4
RESIDENTIAL	60'	40'	25'	25'
COMMERCIAL/ INDUSTRIAL	60'	45'	25'	25'

* = OPTIONAL CENTER GRASSED AREA

LEGEND

R	RADIUS
EOP	EDGE OF PAVEMENT
R/W	RIGHT-OF-WAY
℄	CENTERLINE
MIN.	MINIMUM

NOTES:

1. ROOT BARRIERS OR OTHER PAVEMENT PROTECTION IS REQUIRED IF TREES ARE PLACED IN ISLANDS.
2. ISLANDS SHALL BE RECORDED AS PRIVATE TRACTS AND MAINTAINED BY HOMEOWNER'S ASSOCIATION.
3. A GRASSED ISLAND NO GREATER THAN 50' IN DIAMETER MAY BE CONSTRUCTED IN THE CENTER OF A CUL-DE-SAC.
4. CENTER OF CUL-DE-SAC MAY BE OFFSET 30' FROM CENTERLINE.
5. R/W WIDTH AND CUL-DE-SAC RADIUS ARE ALLOWED TO VARY TO 50'. ALL R/W WIDTHS, CUL-DE-SAC AND CENTERLINE OFFSETS MUST BE MODIFIED ACCORDINGLY. CUL-DE-SAC RETURN RADIIS SHALL BE 25' IN ALL CASES.

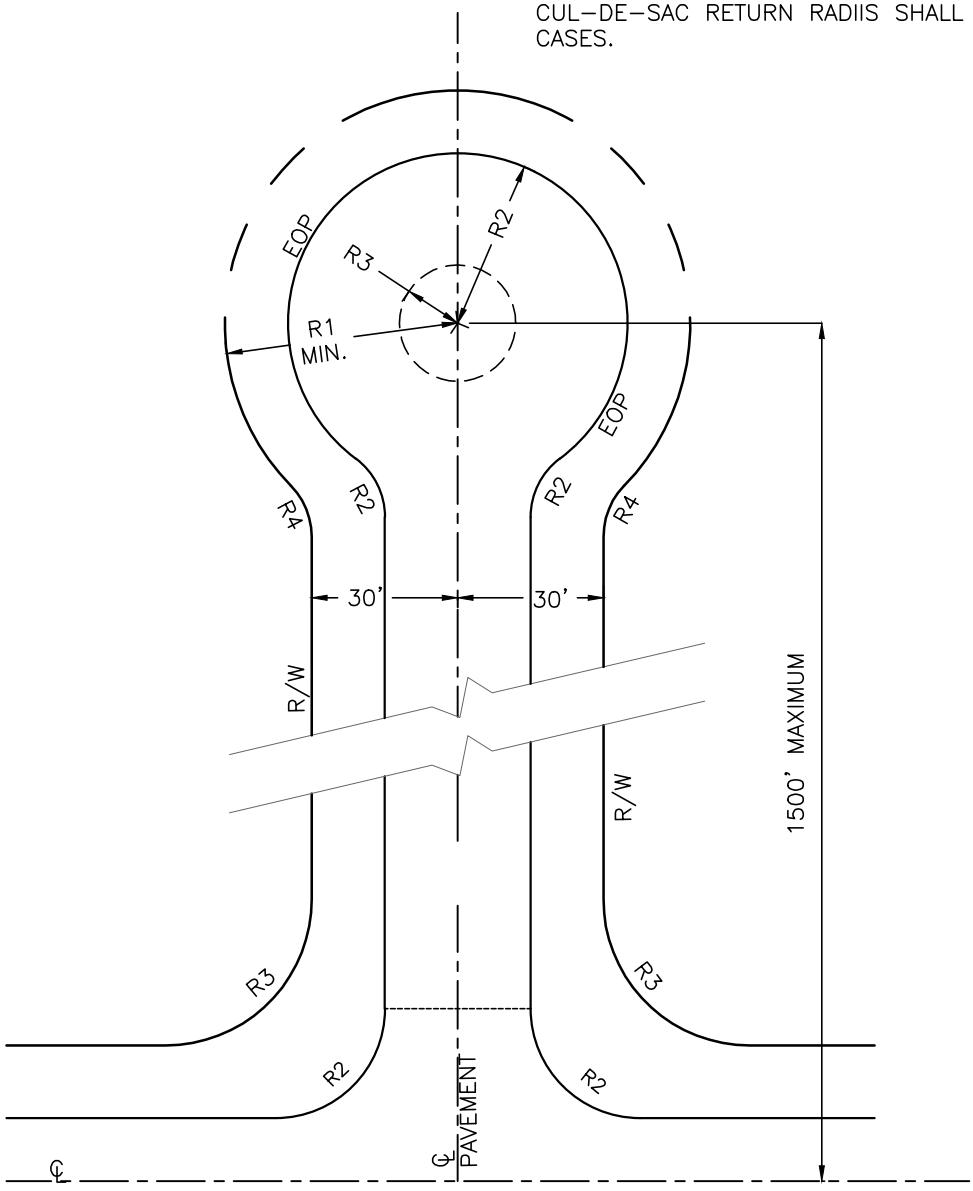

Marion County FLORIDA
OFFICE OF THE COUNTY ENGINEER

MCBCC ADOPTED XX/XX/XX

REVISION #

STANDARD CUL-DE-SAC

7

EN 005

UTILITY	DIMENSION SYMBOL	LOCATION	UNDERGROUND DEPTH
GAS	A	7'	36"
WATER	B	11'	36"
SEWER F.M.	C	11'	36"
RE-USE	D	10'	36"
CABLE T.V.	E	9'	24"
TELEPHONE CONDUIT	F	7'	30"
TELEPHONE CABLE	G	5'	30"
ELECTRIC (UNDERGROUND)	H	2'	36"
ELECTRIC POLES *	I	TANGENT W/RIGHT-OF-WAY	N/A

NORTH & EAST

AERIAL CABLES SHALL BE 18' ABOVE ℄ GRADE. CABLE T.V. & COMMUNICATION CABLES MAY BE PERMITTED AT 16', IF VALID EXTENUATING CIRCUMSTANCES CAN BE SHOWN.

LEGEND
R/W RIGHT-OF-WAY
℄ CENTERLINE

* AND ASSOCIATED ABOVE GROUND EQUIPMENT
** MAINTAIN CLEAR ZONE REQUIREMENTS AS DEFINED BY THE FDOT GREENBOOK

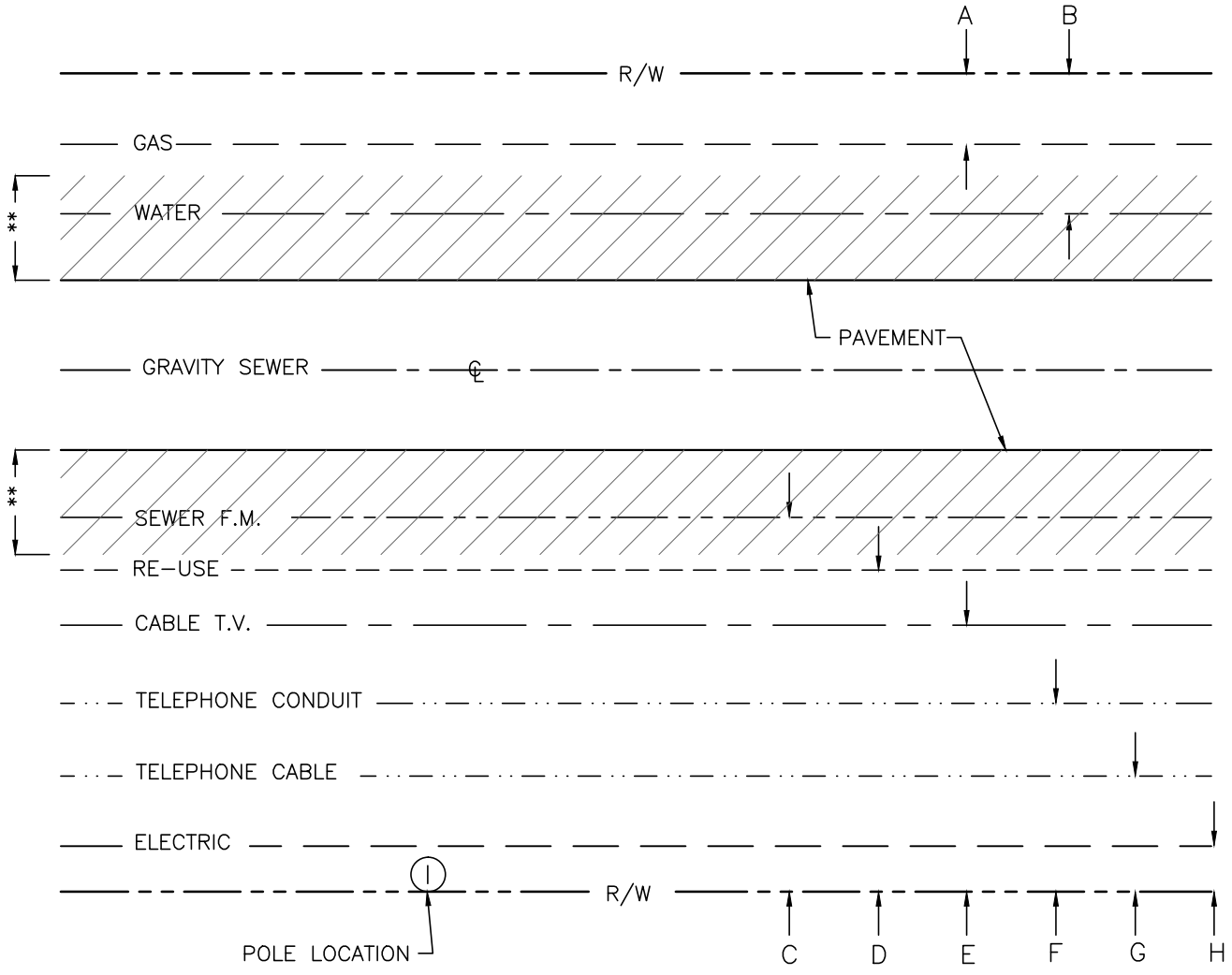

UNLESS OTHERWISE APPROVED BY COUNTY ENGINEER

Marion County FLORIDA OFFICE OF THE COUNTY ENGINEER	MCBCC ADOPTED XX/XX/XX	UTILITY POSITION IN RIGHT-OF-WAY	7
	REVISION #		EN 006

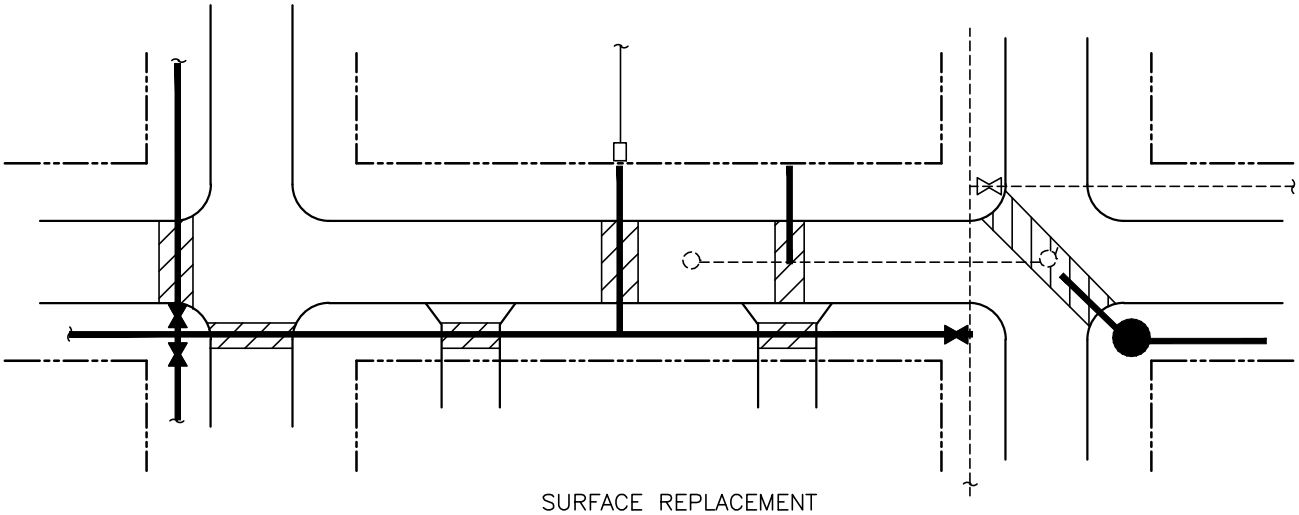

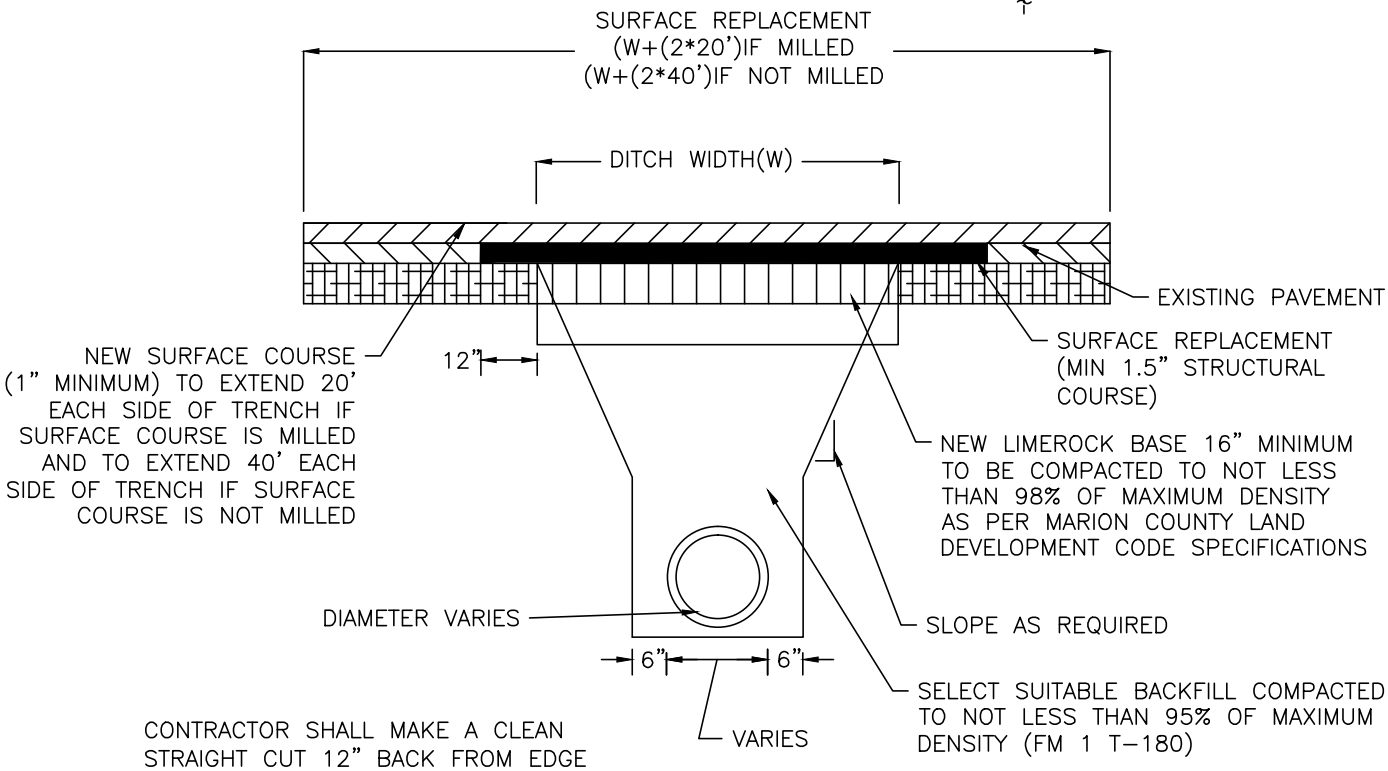

CONTRACTOR SHALL MAKE A CLEAN STRAIGHT CUT 12" BACK FROM EDGE OF NEW LIMEROCK BASE PRIOR TO PLACING NEW SURFACE COURSE (TYPICAL BOTH SIDES).

LEGEND

LIMITS OF TRENCH WIDTH PAVEMENT REPLACEMENT

NOTES:

1. UNLESS OTHERWISE SPECIFIED, MATERIALS AND METHODS OF OPERATION REQUIRED TO INSTALL NEW AND REPLACEMENT PAVEMENT SHALL BE IN ACCORDANCE WITH THE LATEST APPLICABLE REQUIREMENTS AND SPECIFICATIONS FOR ROADS CONTAINED IN THE MARION COUNTY LAND DEVELOPMENT CODE.
2. PAVEMENT SHALL BE REMOVED TO NEATLY SAWED STRAIGHT EDGES. SAWCUTS SHALL BE MADE TO MIN. DEPTH OF 1-1/2"(INCHES).
3. BACKFILL SHALL BE IN ACCORDANCE WITH SPECIFICATIONS OF MARION COUNTY LAND DEVELOPMENT CODE.
4. SURFACE TREATED PAVEMENT JOINTS SHALL BE LAPPED AND FEATHERED.
5. THE TYPE AND THICKNESS OF THE NEW SURFACE MATERIAL SHALL BE CONSISTENT WITH THAT OF THE EXISTING SURFACE BUT IN ALL CASES SHALL MEET THE MINIMUM STANDARDS ESTABLISHED BY THE PLANS AND SPECIFICATONS.

Marion County FLORIDA OFFICE OF THE COUNTY ENGINEER	MCBCC ADOPTED XX/XX/XX REVISION #	PAVEMENT CUT REPAIR	7 EN 007

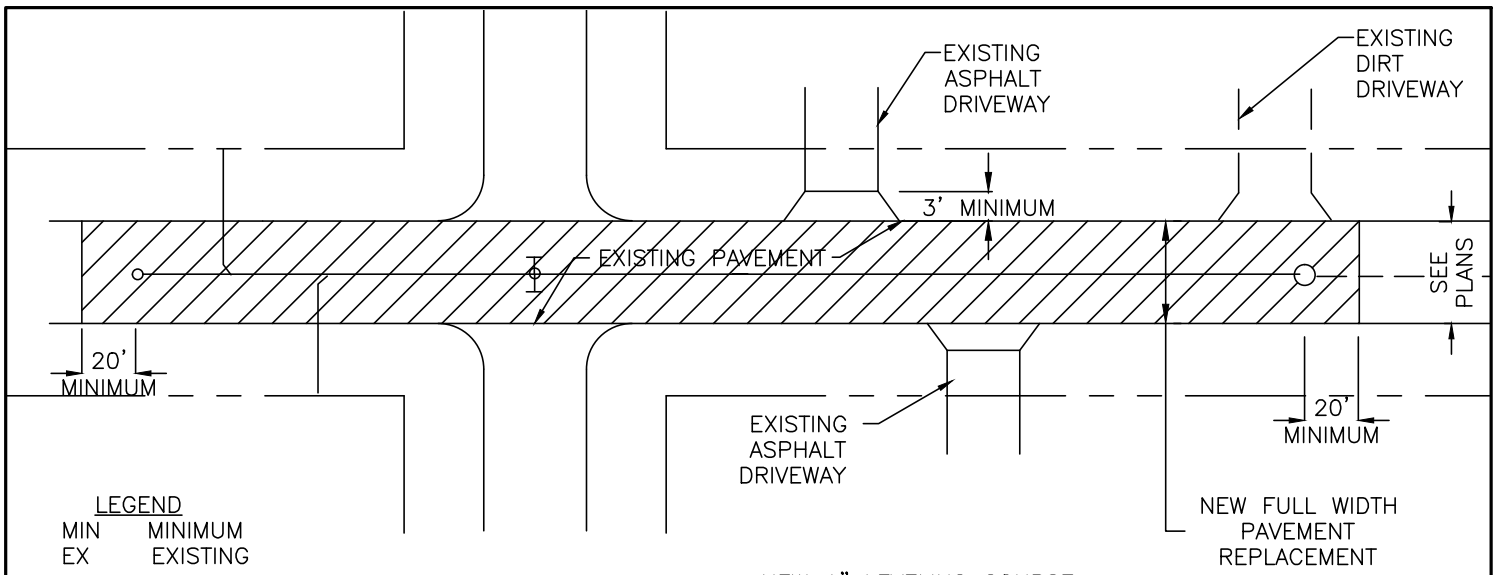

LEGEND
MIN MINIMUM
EX EXISTING

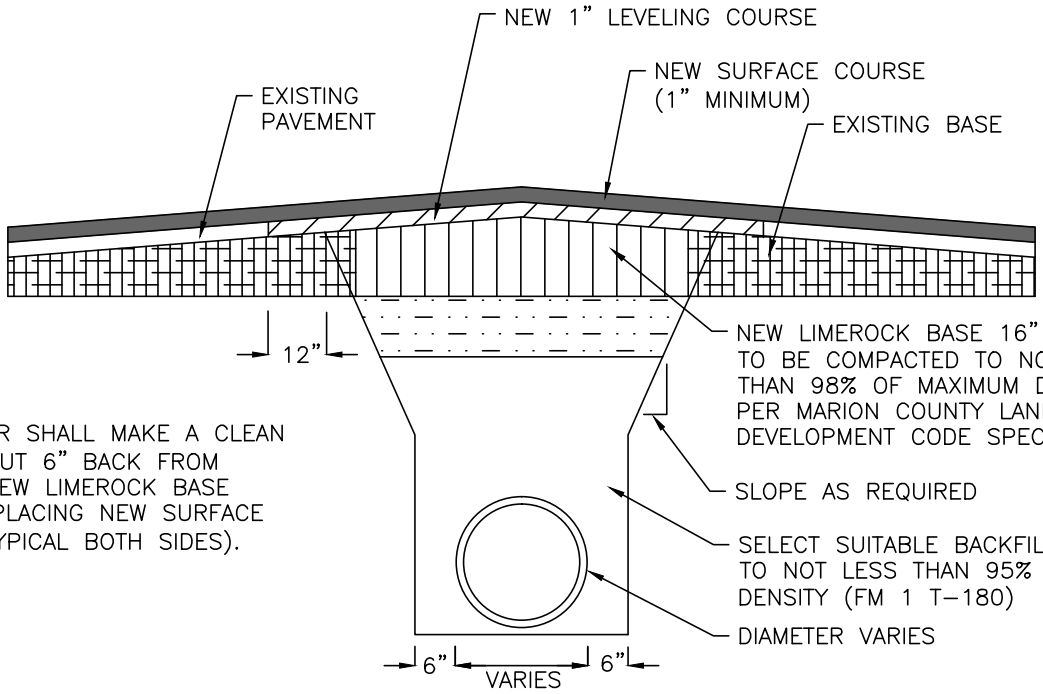

CONTRACTOR SHALL MAKE A CLEAN STRAIGHT CUT 6" BACK FROM EDGE OF NEW LIMEROCK BASE PRIOR TO PLACING NEW SURFACE COURSE (TYPICAL BOTH SIDES).

NOTES:

1. UNLESS OTHERWISE SPECIFIED, MATERIALS AND METHODS OF OPERATION REQUIRED TO INSTALL NEW AND REPLACEMENT PAVEMENT SHALL BE IN ACCORDANCE WITH THE LATEST APPLICABLE REQUIREMENTS AND SPECIFICATIONS FOR ROADS CONTAINED IN THE MARION COUNTY LAND DEVELOPMENT CODE.
2. BACKFILL MATERIAL ABOVE ONE FOOT OVER TOP OF PIPE SHALL BE PLACED IN LAYERS NOT TO EXCEED 8" AND COMPACTED TO 95% OF IT'S MAXIMUM DENSITY AT + OR – 2% OF OPTIMUM MOISTURE CONTENT AS DETERMINED BY LABORATORY STANDARD PROCTOR TEST (ASSHTO T–180).
3. TYPICAL SECTION SHALL BE CONSISTENT WITH AND GOVERNED BY EXISTING ROADWAY SECTION WITH MINIMUM ROADWAY REQUIREMENT TO BE AS SHOWN.
4. ALL EXISTING DRIVEWAY AND ROADWAYS SHALL HAVE PAVEMENT RETURNS PAVED DURING THE ROAD PAVING OPERATION.
5. IF IN THE OPINION OF THE ENGINEER, THE EXISTING ROADWAY IS DAMAGED TO THE EXTENT THAT THE EXISTING PAVEMENT SHOULD BE REMOVED OR IF THE ENTIRE PAVEMENT IS REMOVED DURING PIPELINE INSTALLATION, THE STABILIZED SUBGRADE AND LIMEROCK BASE SHALL BE CONSTRUCTED AS DESCRIBED ABOVE. THE BASE SHALL THEN BE PRIMED AND A NEW SURFACE COURSE AT 1" THICK PLACED.

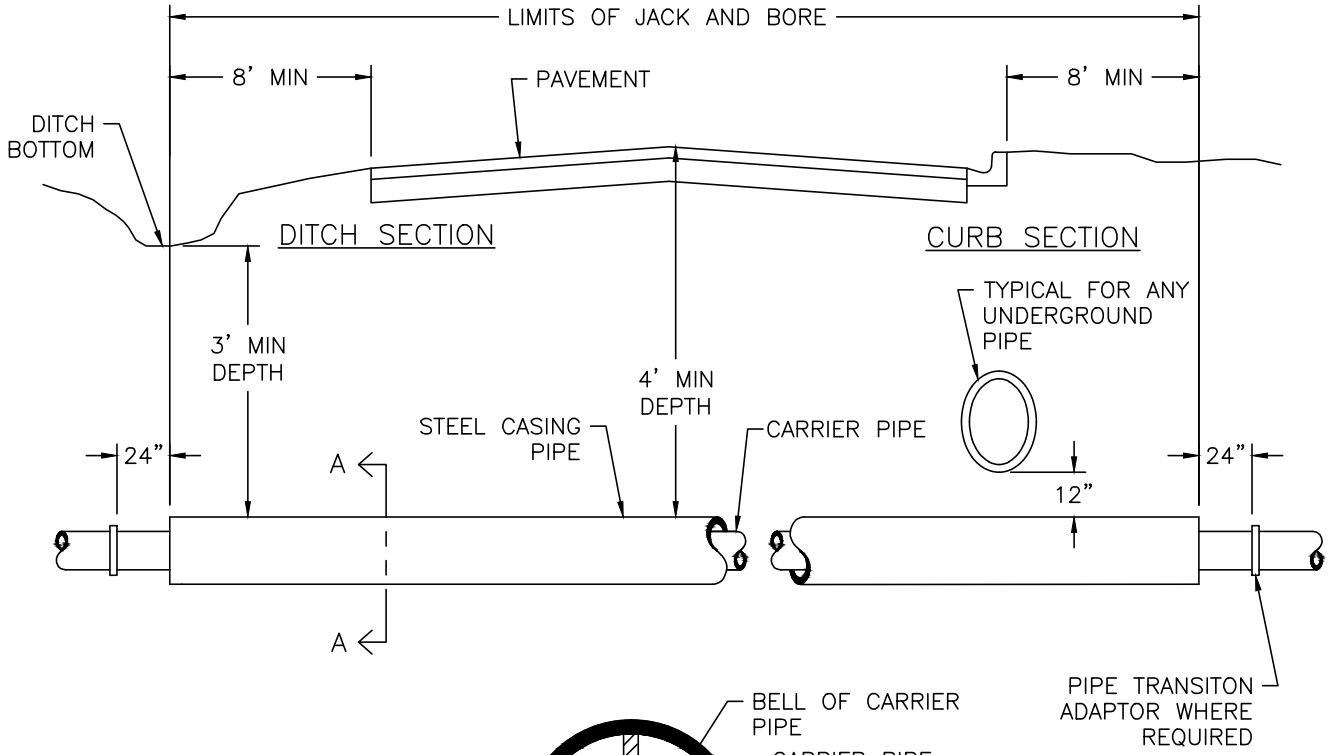

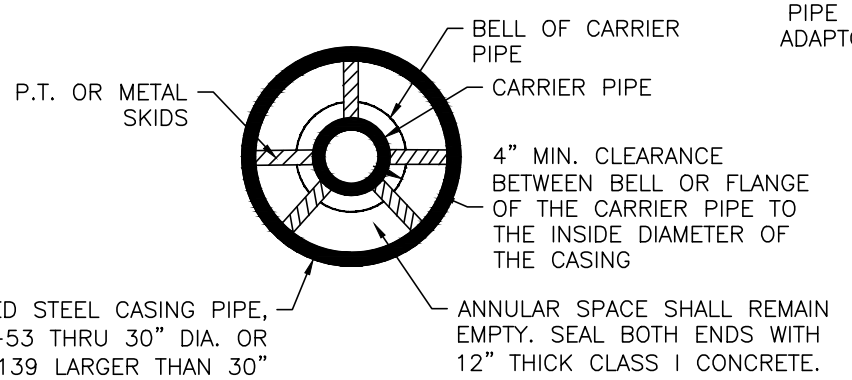

SECTION A–A

LEGEND

MIN	MINIMUM
P.T.	PRESSURE TREATED
DIA.	DIAMETER
R/R	RAILROAD

NOTES:

1. JACK AND BORE METHOD SHALL BE USED FOR ANY CROSSING INVOLVING LARGER THAN 4" DIAMETER PIPE. CROSSINGS INVOLVING 4" OR LESS DIAMETER PIPE MAY BE DONE USING MISSILE METHOD OR DIRECTIONAL DRILLING FOLLOWING MANUFACTURER'S PROCEDURES. IN ALL CASES A PERMIT MUST BE ISSUED BY THE ENGINEERING DEPT. PRIOR TO THE WORK BEING PERFORMED, AND A COUNTY INSPECTOR SHALL BE ON SITE WHILE SAID WORK IS BEING PERFORMED.
2. ROTATION OF CARRIER PIPE INSIDE THE CASING PIPE WILL NOT BE PERMITTED. MECHANICAL OR FLANGED JOINT PIPE SHALL BE USED TO HELP PREVENT SUCH ROTATION.
3. ALL REQUIREMENTS OF FDOT AS SPECIFIED IN THE FDOT "UTILITY ACCOMMODATION GUIDE" SHALL BE ADHERED TO WHEN CROSSING HIGHWAYS. THE MORE STRINGENT REQUIREMENTS BETWEEN THE FDOT AND MARION COUNTY SHALL GOVERN IN ALL CASES OF CONFLICT.
4. THE INSIDE DIAMETER OF THE CASING SHALL BE A MINIMUM OF 4" GREATER THAN THE OUTSIDE DIAMETER OF THE CARRIER PIPE BELL OR COUPLING.
5. IN ADDITION TO THE SUPPORT ARRANGEMENT OF TIMBER OR METAL SKIDS, THE CONTRACTOR SHALL PROVIDE 4' LONG SKIDS FOR EACH LENGTH OF CARRIER PIPE AT THE SPRING LINE AND ON TOP ADJACENT TO THE BELL END OF THE PIPE DESIGNED TO PREVENT LATERAL OR VERTICAL REPLACEMENT.
6. THE CONTRACTOR SHALL SUBMIT SHOP DRAWINGS OF CASING OR TUNNEL LINER PIPE INSTALLATION FOR THE ENGINEER'S APPROVAL PRIOR TO FABRICATION OF PIPING, CASING, AND APPURTENANCES.
7. ALL REQUIREMENTS OF THE RAILROAD AS SPECIFIED BY THE AMERICAN RAILWAY ENGINEERING ASSOCIATION AND THE RAILROAD COMPANY SHALL BE ADHERED TO WHEN CROSSING RAILROADS. THE MORE STRINGENT REQUIREMENTS BETWEEN THE R/R AND MARION COUNTY SHALL GOVERN IN ALL CASES OF CONFLICT.

TYPICAL SECTION NOTES

1. RURAL ROADWAY SECTIONS—RURAL ROADWAY SECTIONS ARE TYPICALLY CHARACTERIZED BY OPEN DRAINAGE SYSTEMS AND HAVE LIMITED CURB AND GUTTER (MOST COMMONLY AT INTERSECTIONS). WIDENED SHOULDERS DO OCCUR, BUT ARE NOT DESIGNATED AS BIKE LANES, AND SIDEWALKS ARE USUALLY NOT EMPLOYED. COORDINATION OF PUBLIC UTILITIES IS REQUIRED, BUT IS NOT GENERALLY A CRITICAL DESIGN ELEMENT AS RIGHT-OF-WAY SPACE IS NOT ENCUMBERED BY SIDEWALKS OR HEAVY COMMERCIAL OR RESIDENTIAL USES.

2. SEMI-URBAN ROADWAY SECTIONS—TYPICALLY OCCUR IN TRANSITIONAL AREAS WHICH ARE NOT FULLY DEVELOPED AND CONSIDERED AS 'URBAN'. A SEMI-URBAN ROADWAY TYPICALLY HAS A CURB AND GUTTER MEDIAN WITH AN UNCURBED OUTSIDE LANE, ALLOWING FOR AN OPEN DRAINAGE SYSTEM. ADEQUATE RIGHT-OF-WAY PLANNING SHOULD INCORPORATE AREAS FOR FUTURE PEDESTRIAN AND BIKE TRAVEL. CONSIDERATION FOR PUBLIC UTILITY LOCATIONS IS A CRITICAL ELEMENT AS THESE AREAS ARE ANTICIPATED TO BECOME 'URBAN'.

3. URBAN ROADWAY SECTIONS—TYPICALLY CHARACTERIZED BY CURB AND GUTTER ON BOTH THE INSIDE AND OUTSIDE LANES AND WITH CLOSED (PIPES) DRAINAGE SYSTEMS USED FOR MANAGEMENT OF STORMWATER RUNOFF. URBAN SECTIONS MAY ALSO INCLUDE SIDEWALKS AND BIKE LANES FOR PEDESTRIANS AND OTHER USERS. CONSIDERATION OF PUBLIC UTILITIES IS A CRITICAL ELEMENT IN DEVELOPING URBAN ROADWAY SECTIONS AS THESE AREAS ARE TYPICALLY INTENSE IN POPULATION AND COMMERCIAL ACTIVITIES.

4. ARTERIAL ROADWAY SECTIONS—THESE ROUTES PROVIDE SERVICE WHICH IS RELATIVELY CONTINUOUS AND OF RELATIVELY HIGH TRAFFIC VOLUME, LONG AVERAGE TRIP LENGTH, HIGH OPERATION SPEED, AND HIGH MOBILITY IMPORTANCE.

5. COLLECTOR ROADWAY SECTIONS—ROUTES THAT PROVIDE SERVICE WHICH IS OF RELATIVELY MODERATE AVERAGE TRAFFIC VOLUME, MODERATELY AVERAGE TRIP LENGTH, AND MODERATELY AVERAGE OPERATING SPEED. THIS ROUTE ALSO COLLECTS AND DISTRIBUTES TRAFFIC BETWEEN LOCAL ROADS OR ARTERIAL ROADS AND SERVES AS A LINKAGE BETWEEN LAND ACCESS AND MOBILITY NEEDS.

6. MAJOR LOCAL ROADWAY SECTIONS—(WITHIN LARGE SUBDIVISIONS OR RESIDENTIAL AREAS) ARE ROUTES THAT CONNECT NEIGHBORHOODS WITH THE ARTERIAL AND COLLECTOR ROAD NETWORK AND PROVIDE INTERCONNECTION BETWEEN NEIGHBORHOODS. MAJOR LOCAL ROADS (IN RURAL AREAS) ARE ROUTES THAT CONNECT SMALLER LOCAL ROADS WITH THE ARTERIAL AND COLLECTOR ROAD NETWORK.

7. MINOR LOCAL ROADWAY SECTIONS—INCLUDES ALL ROADS OUTSIDE OF SUBDIVISIONS THAT ARE NOT CLASSIFIED AS ARTERIAL, COLLECTOR, OR MAJOR LOCAL.

8. SUBDIVISION LOCAL ROADWAY SECTIONS—STREETS LOCATED WITHIN SUBDIVISIONS OR NEIGHBORHOODS THAT PRIMARILY PROVIDE ACCESS TO ABUTTING PROPERTIES OR PROPERTIES ALONG INTERCONNECTED NEIGHBORHOOD STREETS. GENERALLY, THESE STREETS WILL INCLUDE CUL-DE-SACS, SHORT BLOCKS OF A GRID NETWORK, OR OTHER INTERCONNECTED NEIGHBORHOOD STREETS.

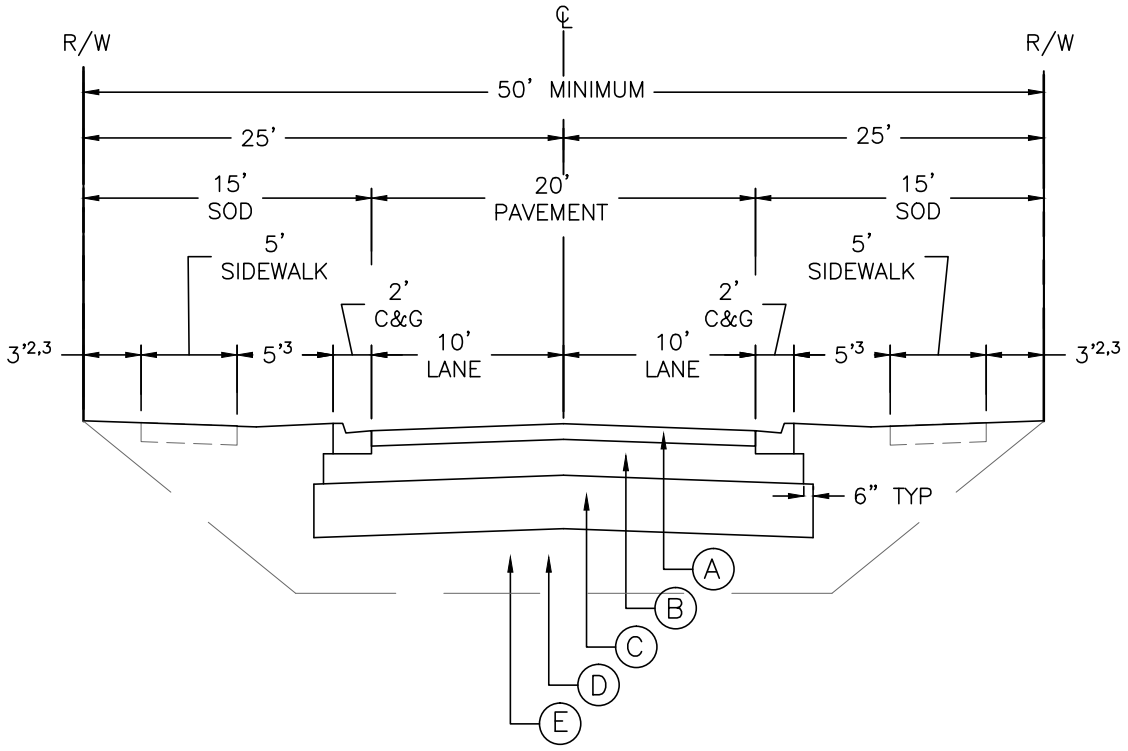

REFER TO ARTICLE 6 OF THIS CODE FOR SECTION WIDTHS AND THICKNESSES

(A) ASPHALTIC CONCRETE SURFACE COURSE

(B) LIMEROCK BASE COURSE, LBR 100

(C) STABILIZED SUBGRADE, LBR 40 (12" MINIMUM THICKNESS)

(D) EMBANKMENT MATERIAL WHEN REQUIRED BY UNSUTABLE MATERIAL EXCAVATION

(E) UNSUITABLE MATERIAL EXCAVATION IF REQUIRED

NOTES:

1. SIDEWALK, WHEN REQUIRED, SHALL BE CONSTRUCTED PER FDOT INDEX 310 AND SECTION 522 OF THE FDOT STANDARD SPECIFICATIONS.
2. EXISTING TREES MAY REMAIN IN THE R/W, PROVIDED THEY DO NOT CONFLICT WITH CLEAR ZONE, DRAINAGE, SIDEWALKS OR UTILITIES
3. SEED & MULCH MAY BE ALLOWED IN CERTAIN AREAS OF THE R/W IF APPROVED.
4. THIS TYPICAL SECTION IS VALID FOR PLATS FROM 2013 AND PRIOR.

LEGEND

C&G	CURB AND GUTTER
℄	CENTERLINE
R/W	RIGHT-OF-WAY
TYP	TYPICAL

Marion County FLORIDA OFFICE OF THE COUNTY ENGINEER	MCBCC ADOPTED XX/XX/XX REVISION #	2 LANE (PLATS PRIOR TO 2013) URBAN SUBDIVISION LOCAL TYPICAL SECTION	7 EN 011

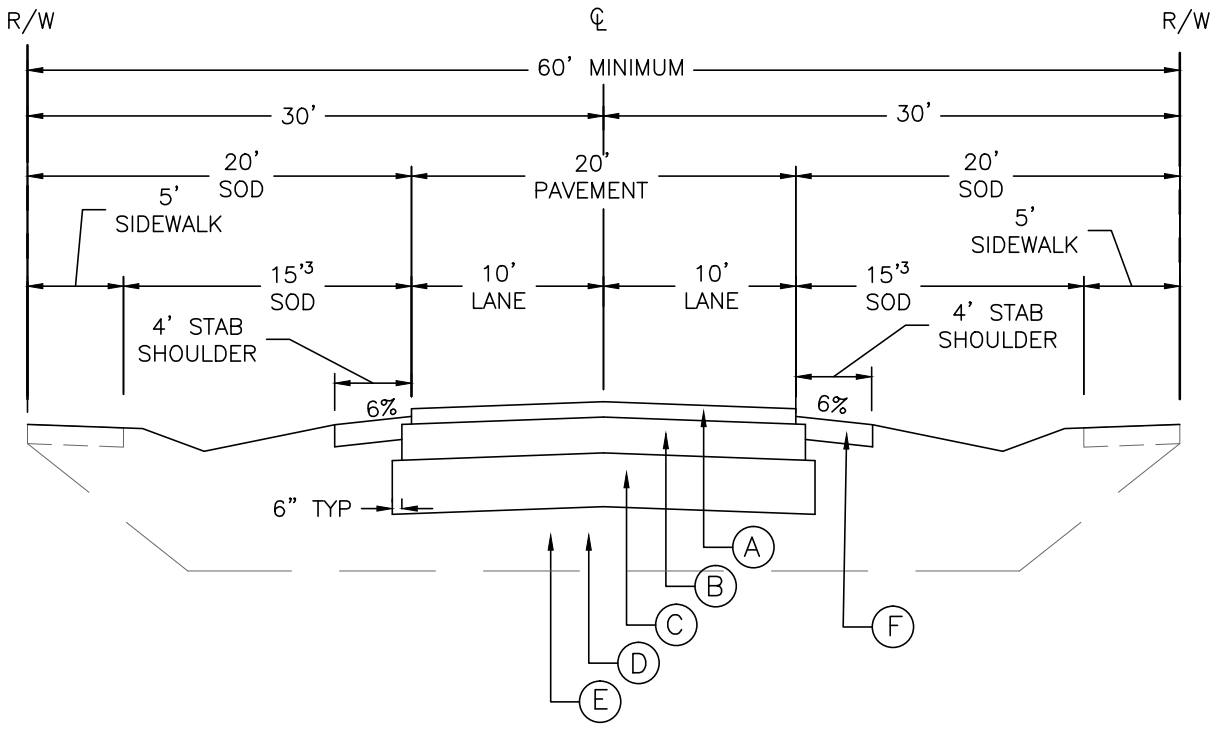

REFER TO ARTICLE 6 OF THIS CODE FOR SECTION WIDTHS AND THICKNESSES

(A) ASPHALTIC CONCRETE SURFACE COURSE

(B) LIMEROCK BASE COURSE, LBR 100

(C) STABILIZED SUBGRADE, LBR 40 (12" MINIMUM THICKNESS)

(D) EMBANKMENT MATERIAL WHEN REQUIRED BY UNSUTABLE MATERIAL EXCAVATION

(E) UNSUITABLE MATERIAL EXCAVATION IF REQUIRED

(F) STAB SHOULDER, LBR 40 (6" MINIMUM THICKNESS)

NOTES:

1. SIDEWALK, WHEN REQUIRED, SHALL BE CONSTRUCTED PER FDOT INDEX 310 AND SECTION 522 OF THE FDOT STANDARD SPECIFICATIONS.
2. EXISTING TREES MAY REMAIN IN THE R/W, PROVIDED THEY DO NOT CONFLICT WITH CLEAR ZONE, DRAINAGE, SIDEWALKS OR UTILITIES
3. SEED & MULCH MAY BE ALLOWED IN CERTAIN AREAS OF THE R/W IF APPROVED.

LEGEND

C&G	CURB AND GUTTER
℄	CENTERLINE
R/W	RIGHT-OF-WAY
TYP	TYPICAL
STAB	STABILIZED

Marion County FLORIDA OFFICE OF THE COUNTY ENGINEER	MCBCC ADOPTED XX/XX/XX REVISION #	2 LANE RURAL SUBDIVISION LOCAL TYPICAL SECTION	7 EN 012

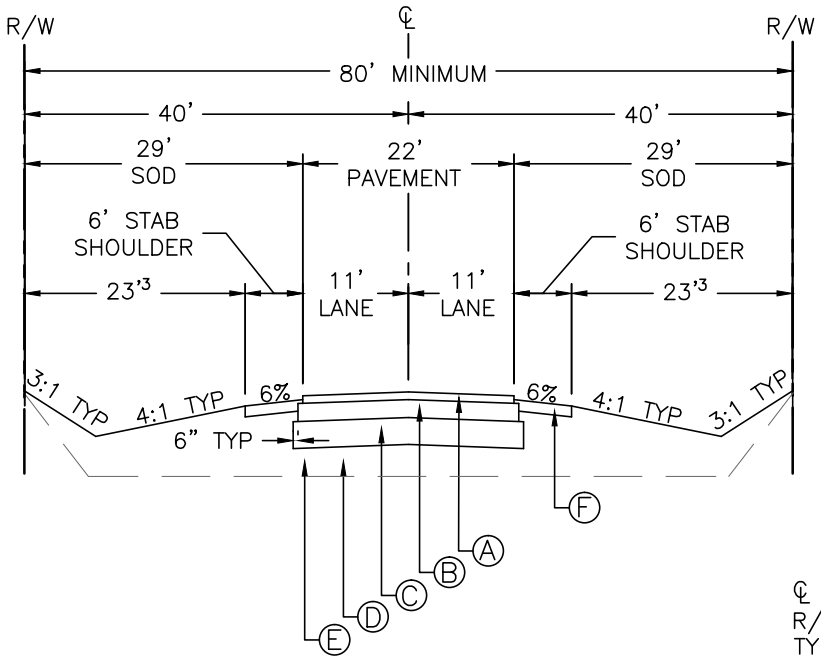

LEGEND

℄	CENTERLINE
R/W	RIGHT–OF–WAY
TYP	TYPICAL
STAB	STABILIZED

REFER TO ARTICLE 6 OF THIS CODE FOR SECTION WIDTHS AND THICKNESSES

Ⓐ ASPHALTIC CONCRETE SURFACE COURSE

Ⓑ LIMEROCK BASE COURSE, LBR 100

Ⓒ STABILIZED SUBGRADE, LBR 40 (12" MINIMUM THICKNESS)

Ⓓ EMBANKMENT MATERIAL WHEN REQUIRED BY UNSUTABLE MATERIAL EXCAVATION

Ⓔ UNSUITABLE MATERIAL EXCAVATION IF REQUIRED

Ⓕ STABILIZED SHOULDER, LBR 40 (6" MINIMUM THICKNESS)

NOTES:

1. SIDEWALK, WHEN REQUIRED, SHALL BE CONSTRUCTED PER FDOT INDEX 310 AND SECTION 522 OF THE FDOT STANDARD SPECIFICATIONS.
2. EXISTING TREES MAY REMAIN IN THE R/W, PROVIDED THEY DO NOT CONFLICT WITH CLEAR ZONE, DRAINAGE, SIDEWALKS OR UTILITIES
3. SEED & MULCH MAY BE ALLOWED IN CERTAIN AREAS OF THE R/W IF APPROVED.

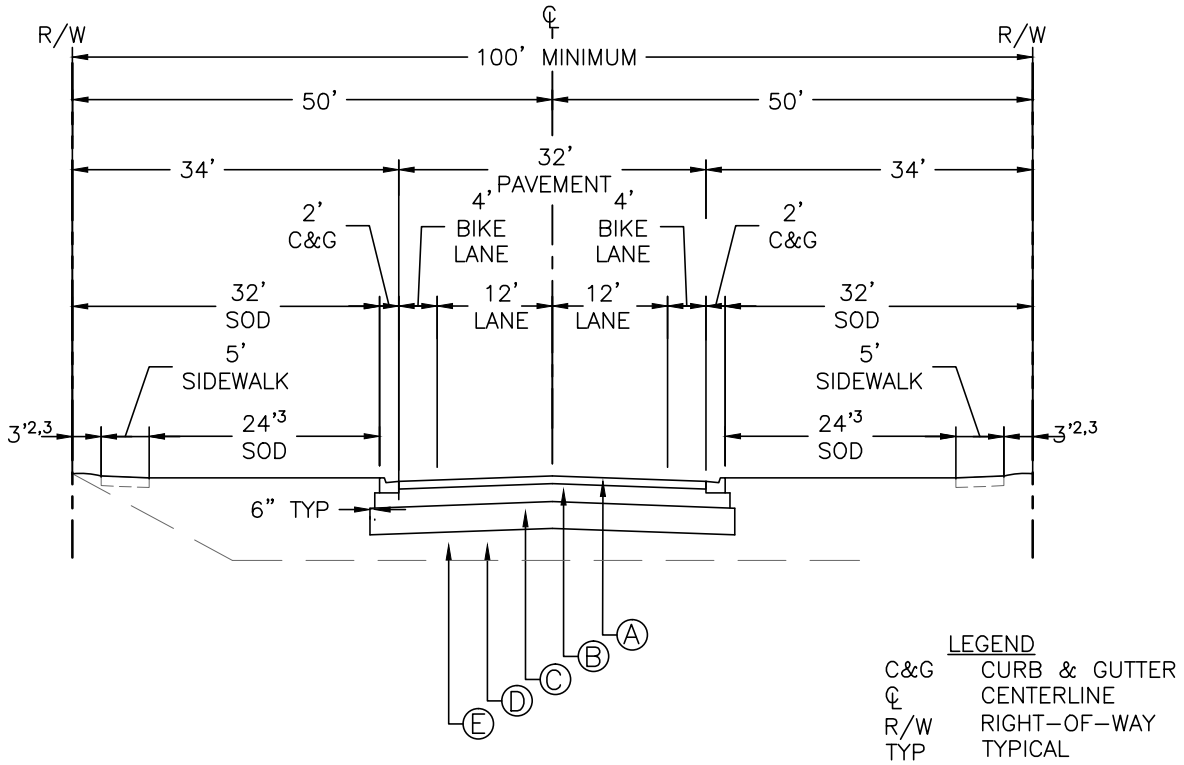

REFER TO ARTICLE 6 OF THIS CODE FOR SECTION WIDTHS AND THICKNESSES

Ⓐ ASPHALTIC CONCRETE SURFACE COURSE

Ⓑ LIMEROCK BASE COURSE, LBR 100

Ⓒ STABILIZED SUBGRADE, LBR 40 (12" MINIMUM THICKNESS)

Ⓓ EMBANKMENT MATERIAL WHEN REQUIRED BY UNSUTABLE MATERIAL EXCAVATION

Ⓔ UNSUITABLE MATERIAL EXCAVATION IF REQUIRED

NOTES:

1. SIDEWALK, WHEN REQUIRED, SHALL BE CONSTRUCTED PER FDOT INDEX 310 AND SECTION 522 OF THE FDOT STANDARD SPECIFICATIONS.
2. EXISTING TREES MAY REMAIN IN THE R/W, PROVIDED THEY DO NOT CONFLICT WITH CLEAR ZONE, DRAINAGE, SIDEWALKS OR UTILITIES
3. SEED & MULCH MAY BE ALLOWED IN CERTAIN AREAS OF THE R/W IF APPROVED.

Marion County FLORIDA OFFICE OF THE COUNTY ENGINEER	MCBCC ADOPTED XX/XX/XX REVISION #	2 LANE URBAN MAJOR LOCAL TYPICAL SECTION	7 EN 014

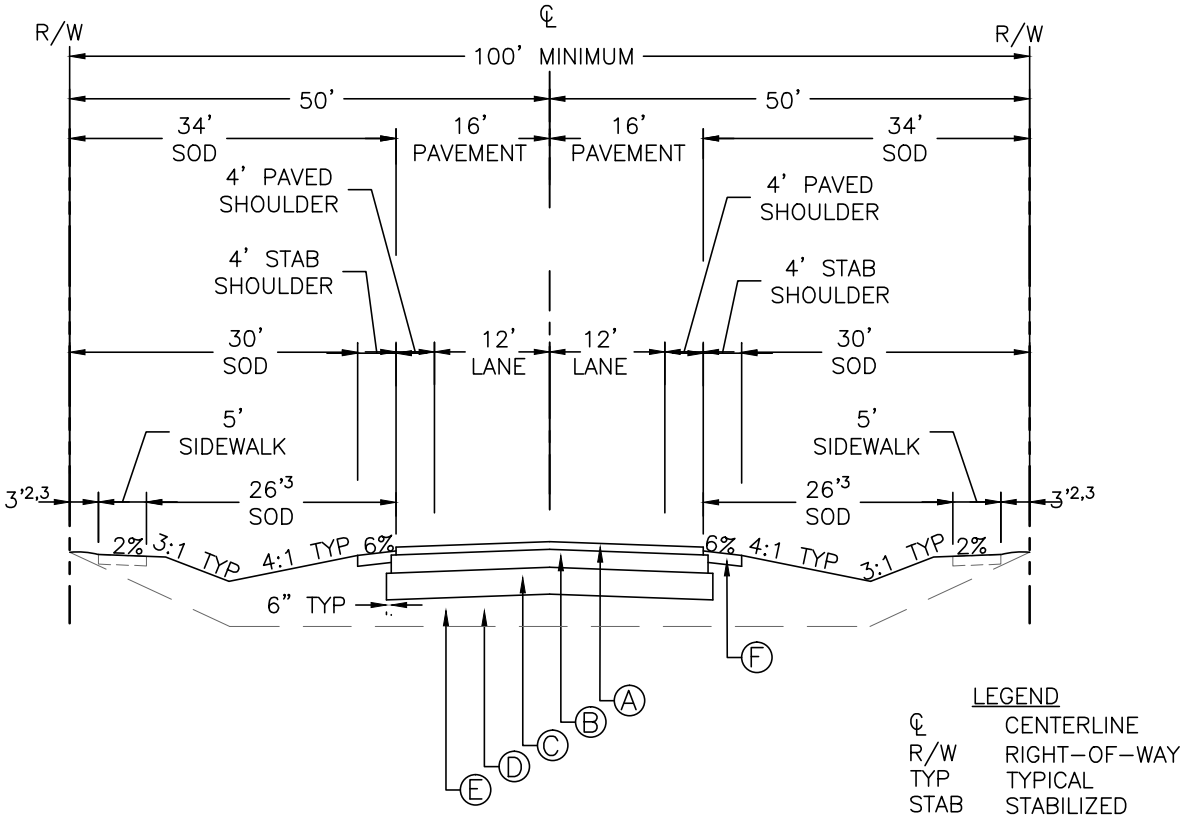

LEGEND

℄	CENTERLINE
R/W	RIGHT–OF–WAY
TYP	TYPICAL
STAB	STABILIZED

REFER TO ARTICLE 6 OF THIS CODE FOR SECTION WIDTHS AND THICKNESSES

Ⓐ ASPHALTIC CONCRETE SURFACE COURSE

Ⓑ LIMEROCK BASE COURSE, LBR 100

Ⓒ STABILIZED SUBGRADE, LBR 40 (12" MINIMUM THICKNESS)

Ⓓ EMBANKMENT MATERIAL WHEN REQUIRED BY UNSUTABLE MATERIAL EXCAVATION

Ⓔ UNSUITABLE MATERIAL EXCAVATION IF REQUIRED

Ⓕ STABILIZED SHOULDER, LBR 40 (6" MINIMUM THICKNESS)

NOTES:

1. SIDEWALK, WHEN REQUIRED, SHALL BE CONSTRUCTED PER FDOT INDEX 310 AND SECTION 522 OF THE FDOT STANDARD SPECIFICATIONS.
2. EXISTING TREES MAY REMAIN IN THE R/W, PROVIDED THEY DO NOT CONFLICT WITH CLEAR ZONE, DRAINAGE, SIDEWALKS OR UTILITIES
3. SEED & MULCH MAY BE ALLOWED IN CERTAIN AREAS OF THE R/W IF APPROVED.

Marion County FLORIDA OFFICE OF THE COUNTY ENGINEER	MCBCC ADOPTED XX/XX/XX REVISION #	2 LANE RURAL MAJOR LOCAL TYPICAL SECTION	7 EN 015

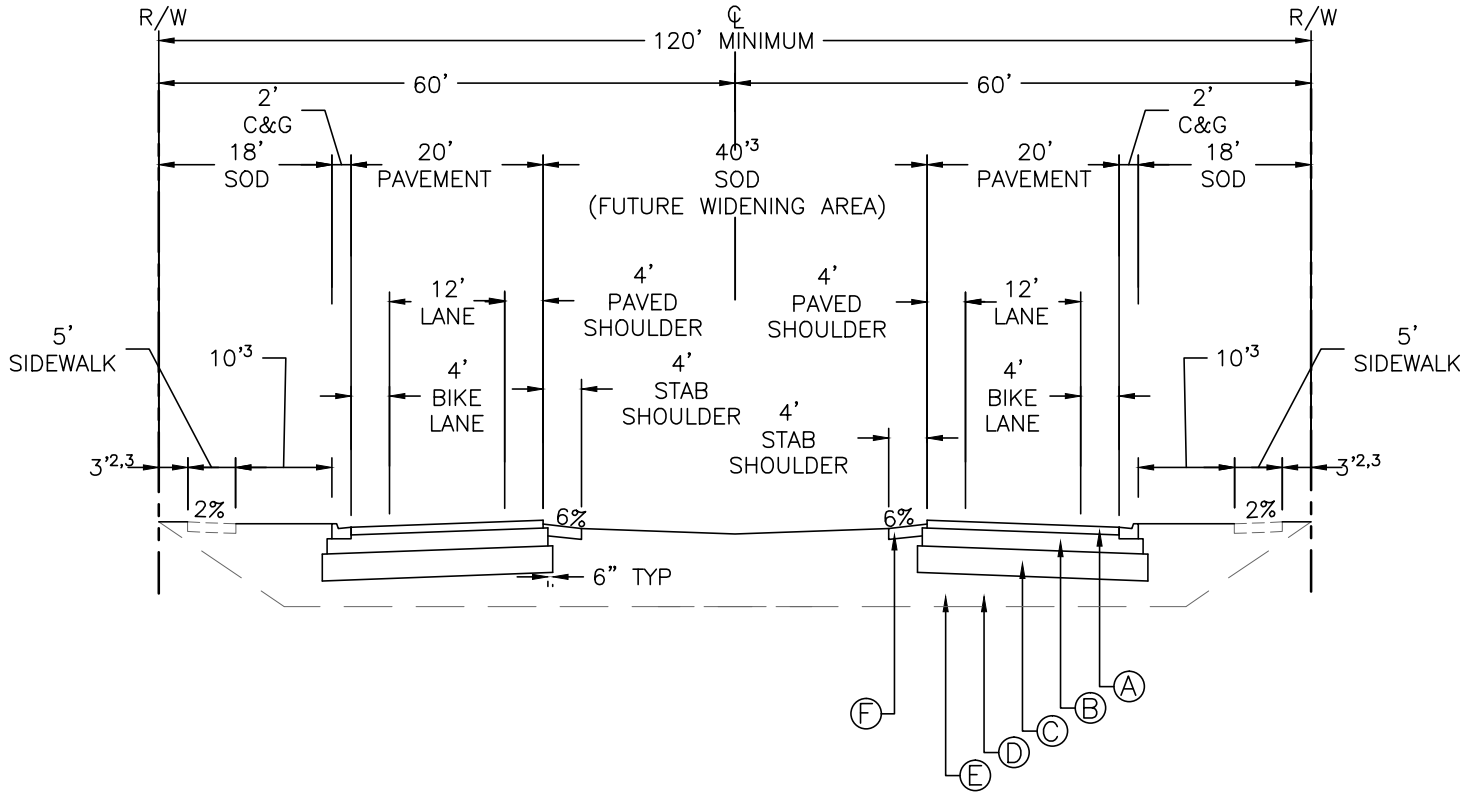

NOTES:

1. SIDEWALK, WHEN REQUIRED, SHALL BE CONSTRUCTED PER FDOT INDEX 310 AND SECTION 522 OF THE FDOT STANDARD SPECIFICATIONS.
2. EXISTING TREES MAY REMAIN IN THE R/W, PROVIDED THEY DO NOT CONFLICT WITH CLEAR ZONE, DRAINAGE, SIDEWALKS OR UTILITIES
3. SEED & MULCH MAY BE ALLOWED IN CERTAIN AREAS OF THE R/W IF APPROVED.

LEGEND

C&G	CURB & GUTTER
℄	CENTERLINE
R/W	RIGHT-OF-WAY
TYP	TYPICAL
STAB	STABILIZED

REFER TO ARTICLE 6 OF THIS CODE FOR SECTION WIDTHS AND THICKNESSES

Ⓐ ASPHALTIC CONCRETE SURFACE COURSE

Ⓑ LIMEROCK BASE COURSE, LBR 100

Ⓒ STABILIZED SUBGRADE, LBR 40 (12" MINIMUM THICKNESS)

Ⓓ EMBANKMENT MATERIAL WHEN REQUIRED BY UNSUTABLE MATERIAL EXCAVATION

Ⓔ UNSUITABLE MATERIAL EXCAVATION IF REQUIRED

Ⓕ STABILIZED SHOULDER, LBR 40 (6" MINIMUM THICKNESS)

Marion County FLORIDA
OFFICE OF THE COUNTY ENGINEER

MCBCC ADOPTED XX/XX/XX

REVISION #

2 LANE URBAN COLLECTOR/ARTERIAL TYPICAL SECTION

7

EN 016

Marion County FLORIDA
OFFICE OF THE COUNTY ENGINEER

MCBCC ADOPTED
XX/XX/XX
REVISION #

4 LANE URBAN COLLECTOR/ARTERIAL TYPICAL SECTION

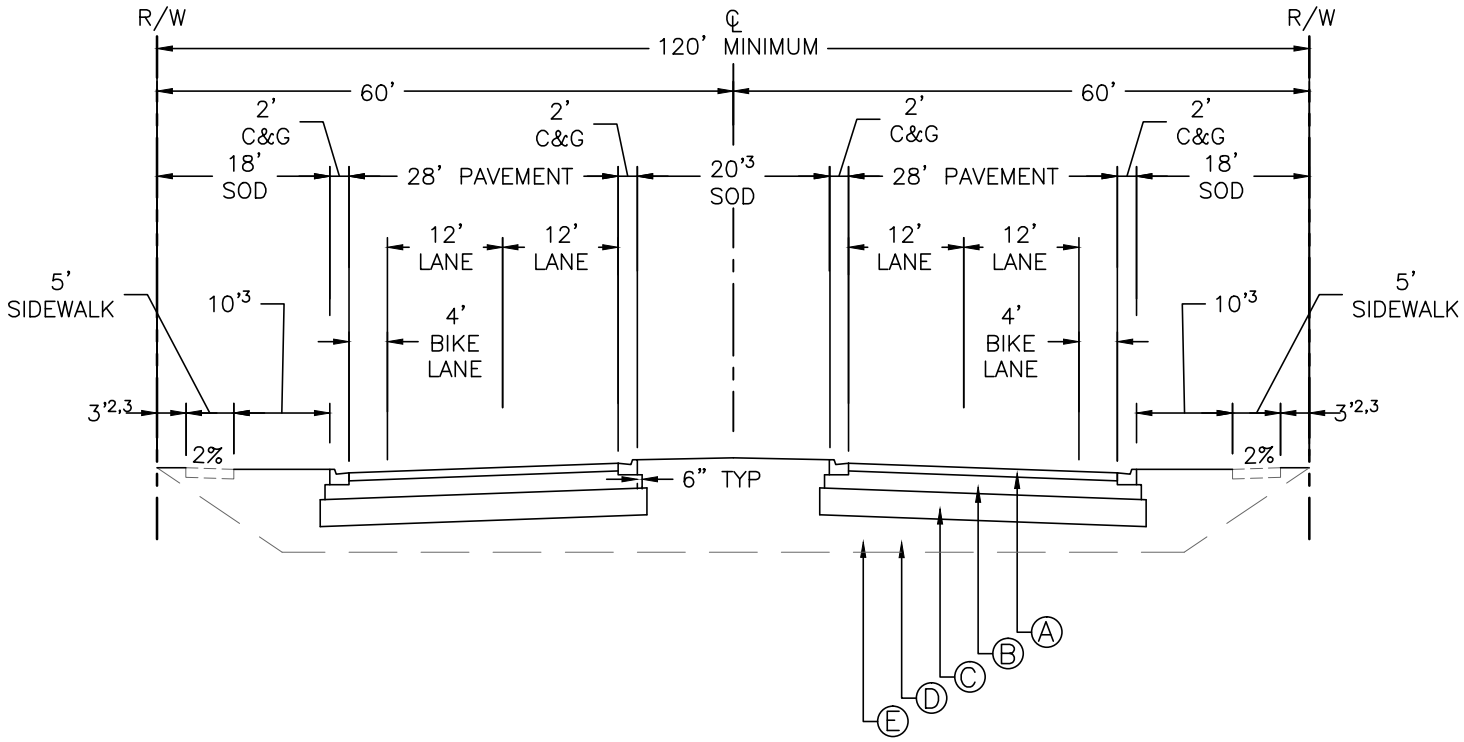

NOTES:
1. SIDEWALK, WHEN REQUIRED, SHALL BE CONSTRUCTED PER FDOT INDEX 310 AND SECTION 522 OF THE FDOT STANDARD SPECIFICATIONS.
2. EXISTING TREES MAY REMAIN IN THE R/W, PROVIDED THEY DO NOT CONFLICT WITH CLEAR ZONE, DRAINAGE, SIDEWALKS OR UTILITIES
3. SEED & MULCH MAY BE ALLOWED IN CERTAIN AREAS OF THE R/W IF APPROVED.

LEGEND

C&G	CURB & GUTTER
℄	CENTERLINE
R/W	RIGHT-OF-WAY
TYP	TYPICAL

REFER TO ARTICLE 6 OF THIS CODE FOR SECTION WIDTHS AND THICKNESSES

Ⓐ ASPHALTIC CONCRETE SURFACE COURSE

Ⓑ LIMEROCK BASE COURSE, LBR 100

Ⓒ STABILIZED SUBGRADE, LBR 40 (12" MINIMUM THICKNESS)

Ⓓ EMBANKMENT MATERIAL WHEN REQUIRED BY UNSUTABLE MATERIAL EXCAVATION

Ⓔ UNSUITABLE MATERIAL EXCAVATION IF REQUIRED

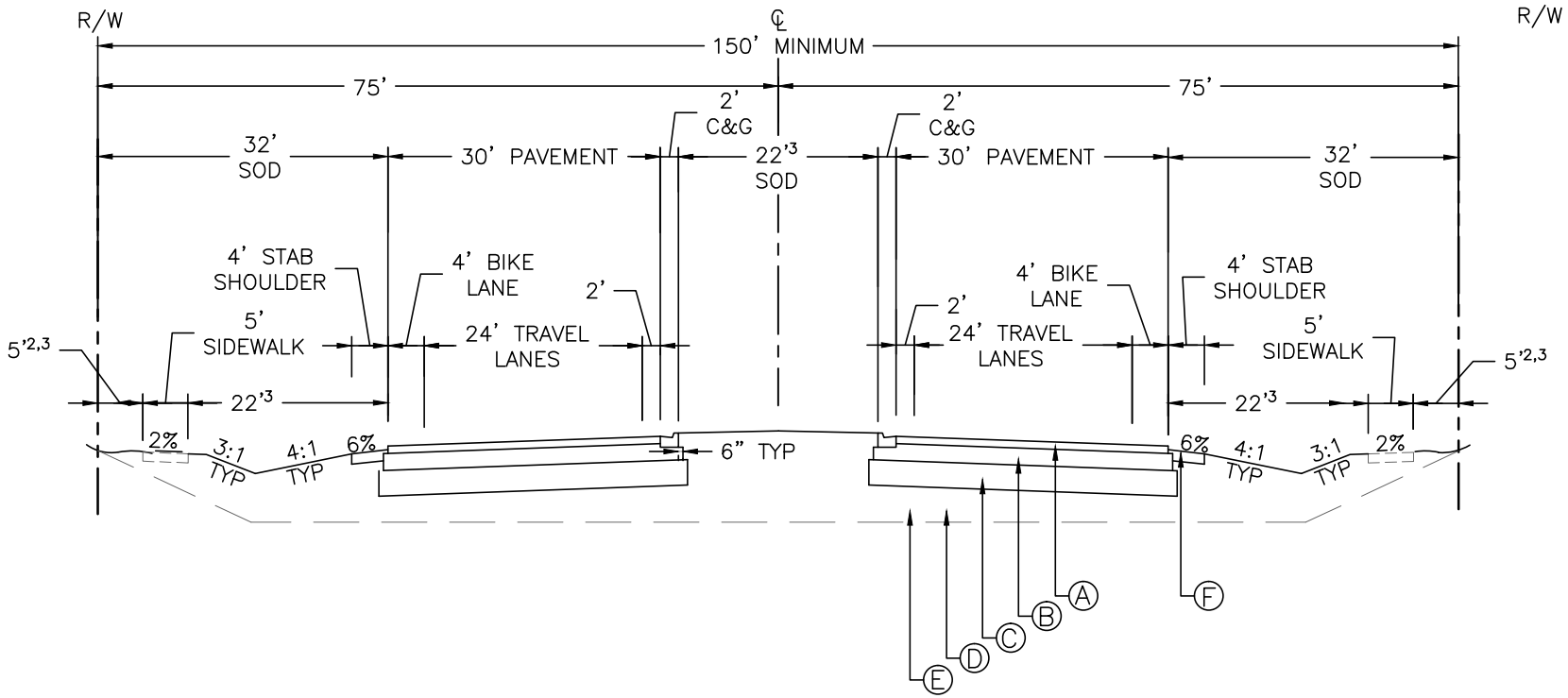

NOTES:

1. SIDEWALK, WHEN REQUIRED, SHALL BE CONSTRUCTED PER FDOT INDEX 310 AND SECTION 522 OF THE FDOT STANDARD SPECIFICATIONS.
2. EXISTING TREES MAY REMAIN IN THE R/W, PROVIDED THEY DO NOT CONFLICT WITH CLEAR ZONE, DRAINAGE, SIDEWALKS OR UTILITIES
3. SEED & MULCH MAY BE ALLOWED IN CERTAIN AREAS OF THE R/W IF APPROVED.

LEGEND

C&G	CURB & GUTTER
℄	CENTERLINE
R/W	RIGHT-OF-WAY
TYP	TYPICAL
STAB	STABILIZED

REFER TO ARTICLE 6 OF THIS CODE FOR SECTION WIDTHS AND THICKNESSES

Ⓐ ASPHALTIC CONCRETE SURFACE COURSE

Ⓑ LIMEROCK BASE COURSE, LBR 100

Ⓒ STABILIZED SUBGRADE, LBR 40 (12" MINIMUM THICKNESS)

Ⓓ EMBANKMENT MATERIAL WHEN REQUIRED BY UNSUTABLE MATERIAL EXCAVATION

Ⓔ UNSUITABLE MATERIAL EXCAVATION IF REQUIRED

Ⓕ STABILIZED SHOULDER, LBR 40 (6" MINIMUM THICKNESS)

Marion County FLORIDA
OFFICE OF THE COUNTY ENGINEER

MCBCC ADOPTED
XX/XX/XX
REVISION #

4 LANE SEMI-URBAN COLLECTOR/ARTERIAL TYPICAL SECTION

7
EN
018

Marion County FLORIDA
OFFICE OF THE COUNTY ENGINEER

MCBCC ADOPTED
XX/XX/XX
REVISION #

2 LANE RURAL COLLECTOR/ARTERIAL TYPICAL SECTION

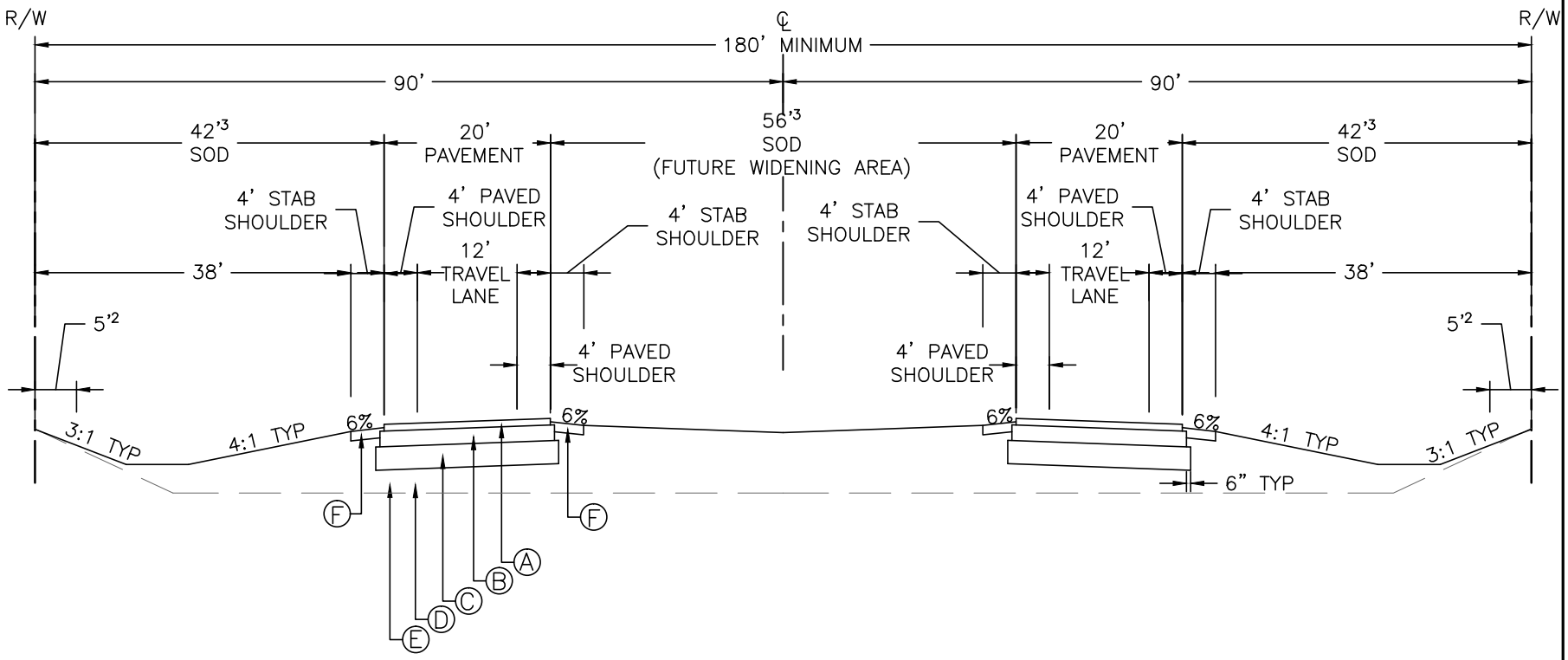

NOTES:

1. SIDEWALK, WHEN REQUIRED, SHALL BE CONSTRUCTED PER FDOT INDEX 310 AND SECTION 522 OF THE FDOT STANDARD SPECIFICATIONS.
2. EXISTING TREES MAY REMAIN IN THE R/W, PROVIDED THEY DO NOT CONFLICT WITH CLEAR ZONE, DRAINAGE, SIDEWALKS OR UTILITIES
3. SEED & MULCH MAY BE ALLOWED IN CERTAIN AREAS OF THE R/W IF APPROVED.

LEGEND

℄	CENTERLINE
R/W	RIGHT-OF-WAY
TYP	TYPICAL
STAB	STABILIZED

REFER TO ARTICLE 6 OF THIS CODE FOR SECTION WIDTHS AND THICKNESSES

Ⓐ ASPHALTIC CONCRETE SURFACE COURSE

Ⓑ LIMEROCK BASE COURSE, LBR 100

Ⓒ STABILIZED SUBGRADE, LBR 40 (12" MINIMUM THICKNESS)

Ⓓ EMBANKMENT MATERIAL WHEN REQUIRED BY UNSUTABLE MATERIAL EXCAVATION

Ⓔ UNSUITABLE MATERIAL EXCAVATION IF REQUIRED

Ⓕ STABILIZED SHOULDER, LBR 40 (6" MINIMUM THICKNESS)

Marion County FLORIDA
OFFICE OF THE COUNTY ENGINEER

MCBCC ADOPTED
XX/XX/XX
REVISION #

4 LANE RURAL COLLECTOR/ARTERIAL TYPICAL SECTION

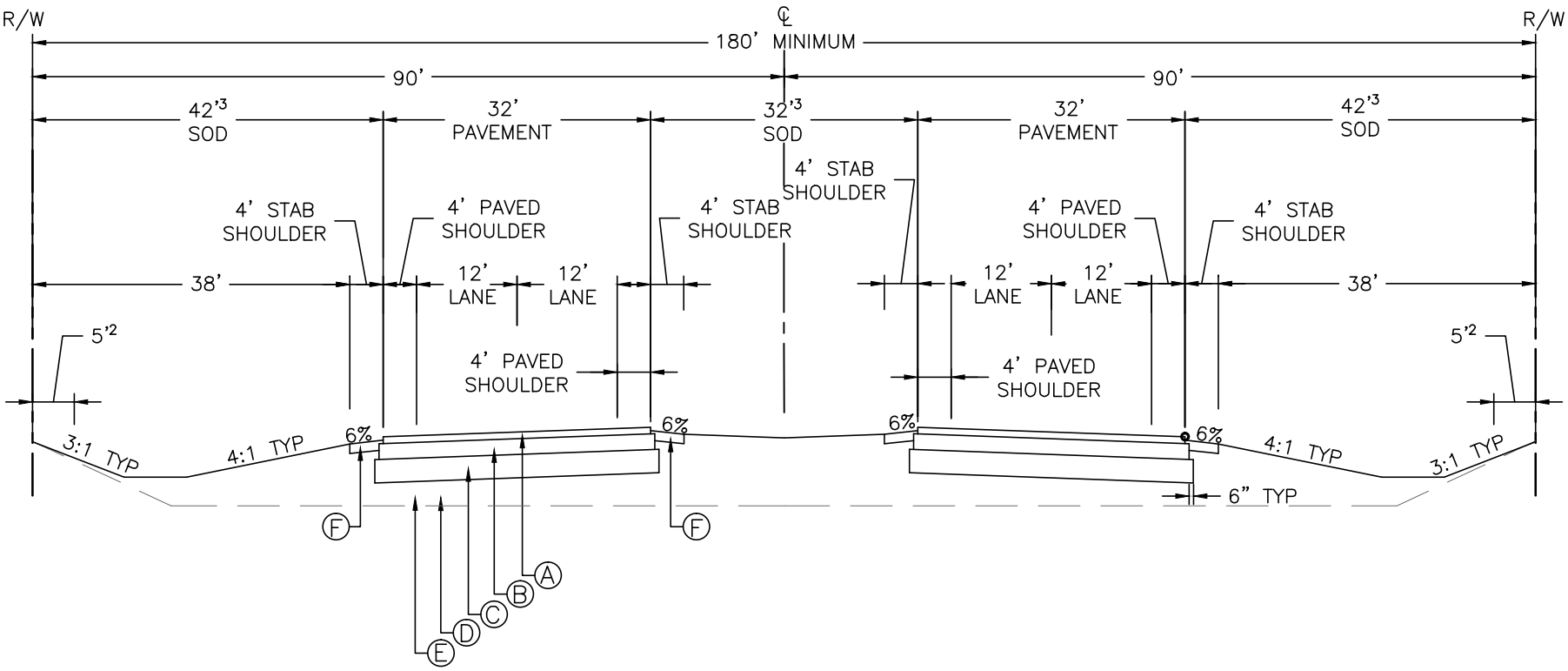

NOTES:
1. SIDEWALK, WHEN REQUIRED, SHALL BE CONSTRUCTED PER FDOT INDEX 310 AND SECTION 522 OF THE FDOT STANDARD SPECIFICATIONS.
2. EXISTING TREES MAY REMAIN IN THE R/W, PROVIDED THEY DO NOT CONFLICT WITH CLEAR ZONE, DRAINAGE, SIDEWALKS OR UTILITIES
3. SEED & MULCH MAY BE ALLOWED IN CERTAIN AREAS OF THE R/W IF APPROVED.

LEGEND

℄	CENTERLINE
R/W	RIGHT-OF-WAY
TYP	TYPICAL
STAB	STABILIZED

REFER TO ARTICLE 6 OF THIS CODE FOR SECTION WIDTHS AND THICKNESSES

Ⓐ ASPHALTIC CONCRETE SURFACE COURSE

Ⓑ LIMEROCK BASE COURSE, LBR 100

Ⓒ STABILIZED SUBGRADE, LBR 40 (12" MINIMUM THICKNESS)

Ⓓ EMBANKMENT MATERIAL WHEN REQUIRED BY UNSUTABLE MATERIAL EXCAVATION

Ⓔ UNSUITABLE MATERIAL EXCAVATION IF REQUIRED

Ⓕ STABILIZED SHOULDER, LBR 40 (6" MINIMUM THICKNESS)

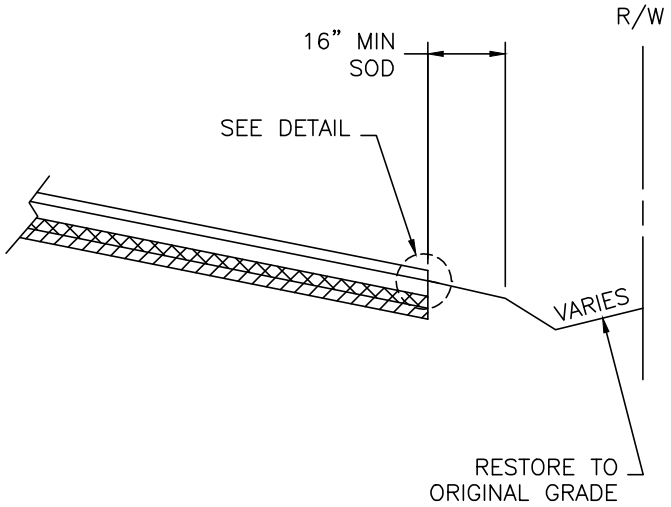

NOTE:
SHOULDERS SHALL BE MAINTAINED DURING CONSTRUCTION AND UP TO FINAL ACCEPTANCE OF PROJECT, INCLUDING ANY REGRADING, REPAIR OF DROPOFFS, REPLACEMENT OF SOD AND SEED AND MULCH.

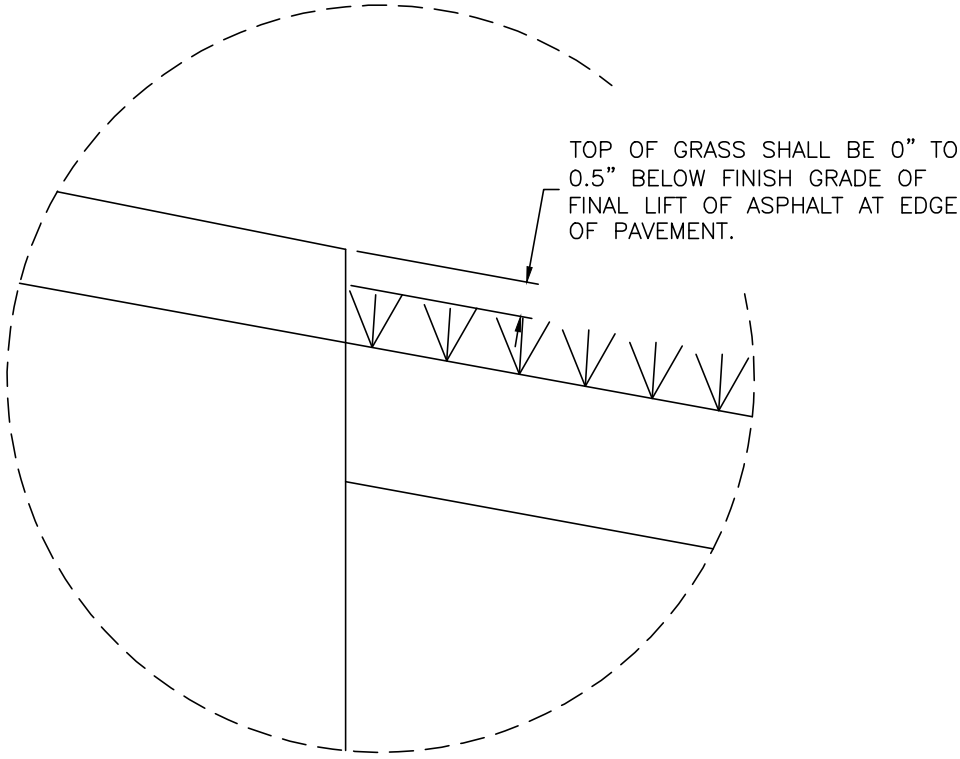

LEGEND

℄	CENTERLINE
R/W	RIGHT-OF-WAY
MIN	MINIMUM

Marion County FLORIDA OFFICE OF THE COUNTY ENGINEER	MCBCC ADOPTED XX/XX/XX	SHOULDER SODDING	7
	REVISION #		EN 021

MAILBOX INSTALLATION SHALL COMPLY WITH AASHTO (A GUIDE FOR ERECTING MAILBOXES ON HIGHWAYS – LATEST REVISION) AND SHALL HAVE BREAKAWAY SUPPORTS.

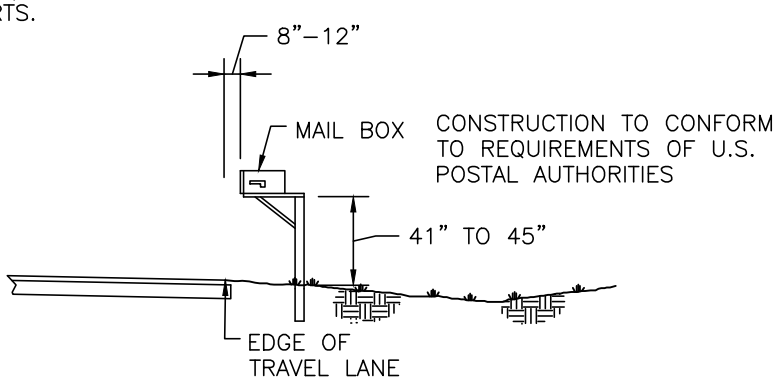

LATERAL PLACEMENT WITH NO SHOULDER OR TURNOUT
(EQUAL TO OR LESS THAN 30MPH)

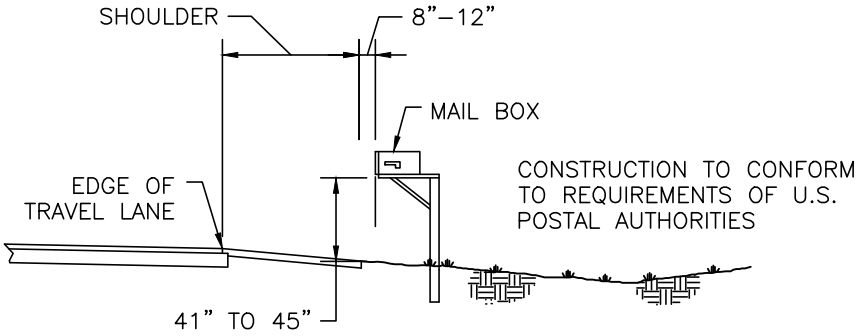

LATERAL PLACEMENT WITH SHOULDER OR TURNOUT
(GREATER THAN 30MPH)

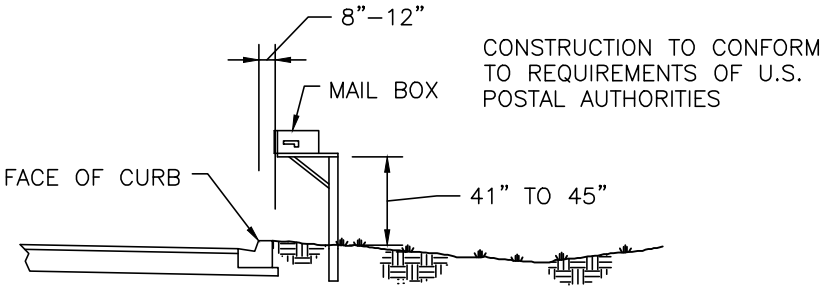

LATERAL PLACEMENT WITH CURB AND GUTTER

Marion County FLORIDA OFFICE OF THE COUNTY ENGINEER	MCBCC ADOPTED XX/XX/XX REVISION #	MAIL BOX INSTALLATION	7 EN 022

GENERAL DRIVEWAY NOTES

1. COMMERCIAL & MULTI-FAMILY SITES REQUIRE ADEQUATE VEHICULAR MANEUVERING AREA OFF RIGHT-OF-WAY AS BACKING OUT OF DRIVEWAY IS NOT PERMITTED.

2. ALL DRIVEWAYS ABUTTING A ROADWAY WITH A SPEED LIMIT OF 40MPH OR ABOVE MUST HAVE DRIVEWAY CULVERTS WITH CONCRETE MITERED END SECTIONS.

3. ALL COMMERCIAL DRIVEWAYS SHALL HAVE CONCRETE MITERED END SECTIONS.

4. RADIUS MINIMUMS: 5 FEET FOR RESIDENTIAL DRIVEWAY (INSIDE SUBDIVISION)
   10 FEET FOR RESIDENTIAL DRIVEWAY (OUTSIDE SUBDIVISION)
   25 FEET FOR COMMERCIAL DRIVEWAY

5. MINIMUM CULVERT DIAMETER: 15"
   (CULVERT DIAMETER TO BE DETERMINED BY COUNTY FIELD INSPECTION)

6. CULVERT MATERIAL SHALL BE 14 GAUGE CORRUGATED METAL PIPE OR APPROVED EQUIVALENT.

7. RESIDENTIAL & COMMERCIAL DRIVEWAYS SHALL BE CONSTRUCTED OF 6" REINFORCED CONCRETE WITH 6"x6"x#10 WELDED WIRE ELEVATED 2" OFF THE GROUND AT FORM-UP, OVER 6" STABILIZATION OR 1 1/4" ASPHALT OVER 6" COMPACTED AND PRIMED LIMEROCK (LBR100.)

8. ALL CONCRETE APRONS REQUIRE AN EXPANSION JOINT AT THE EDGE OF THE EXISTING PAVEMENT/PAVED SHOULDER EDGE.

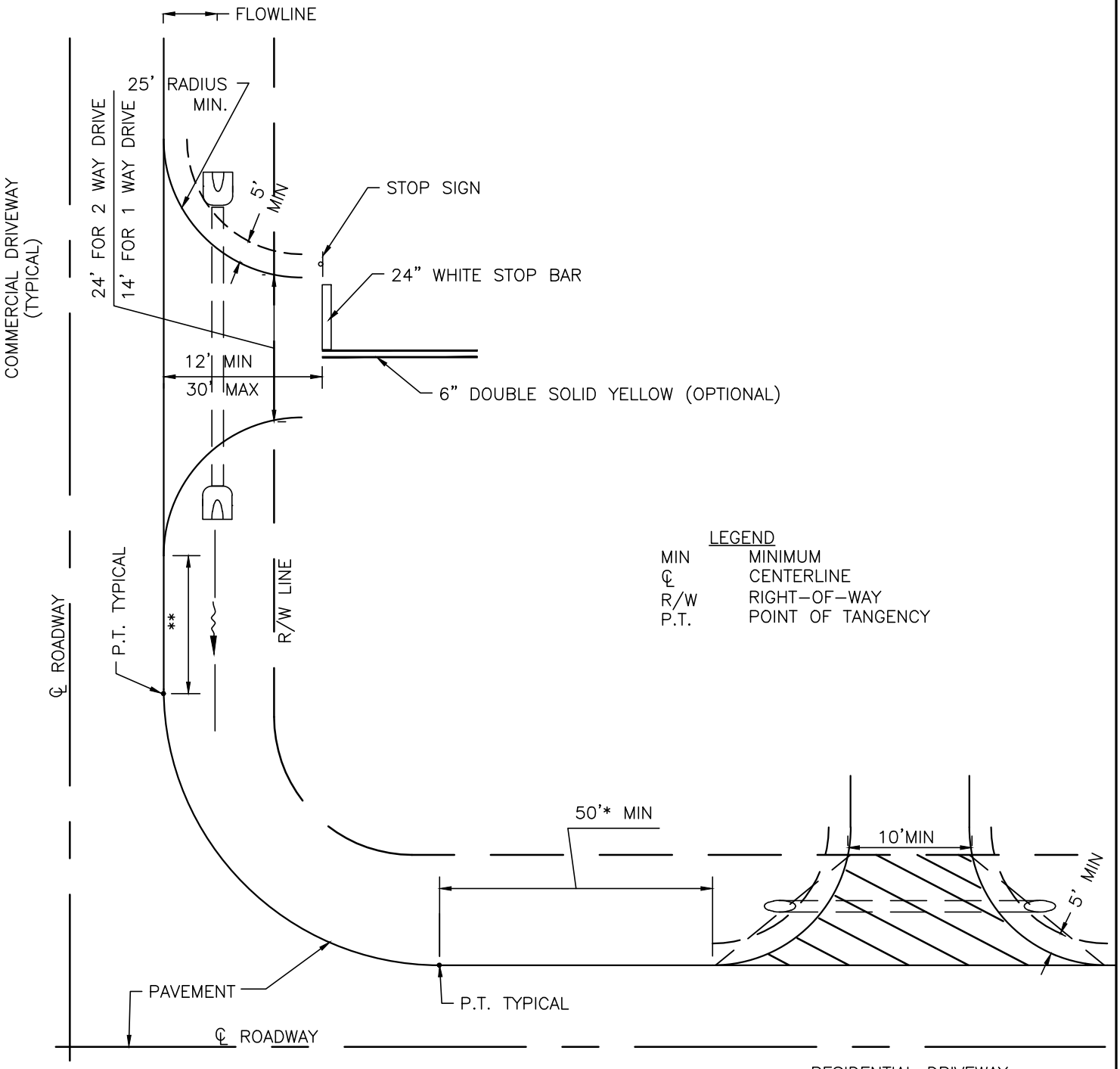

RESIDENTIAL DRIVEWAYS SHALL ACCESS THE MINOR STREET.

NOTES:

1. * THIS DISTANCE SHALL BE THE LESSER OF 1/2 THE LOT WIDTH OR 50 FT.
2. ** SEE TABLES 6.10.5-1 & 6.10.5-2 FOR SPACING REQUIREMENTS.
3. STOP SIGN AND STOP BAR SHALL BE PROVIDED WHEN PROJECTED DRIVEWAY DAILY TRAFFIC IS 25 VEHCIELS PER HOUR OR GREATER.

Marion County FLORIDA OFFICE OF THE COUNTY ENGINEER	MCBCC ADOPTED XX/XX/XX REVISION #	COMMERCIAL & RESIDENTIAL DRIVEWAYS AT INTERSECTIONS	7 EN 024

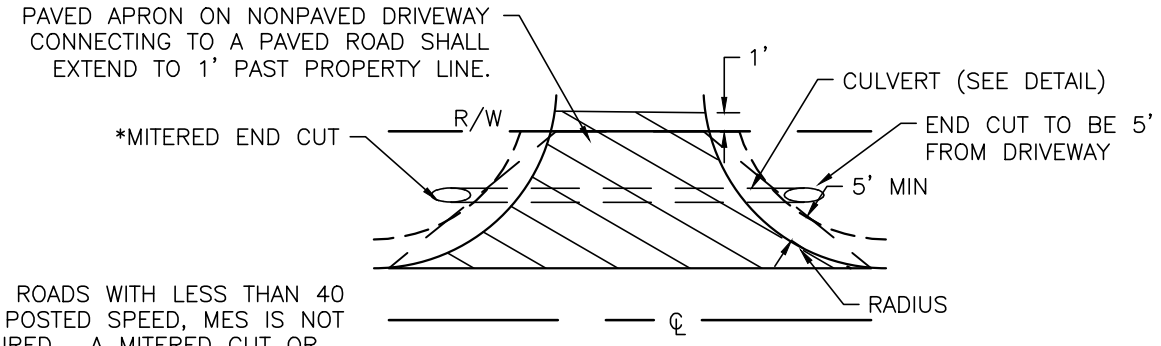

PLAN VIEW

* ON ROADS WITH LESS THAN 40 MPH POSTED SPEED, MES IS NOT REQUIRED. A MITERED CUT OR FLARED END IS ALLOWABLE. ROADS WITH A POSTED SPEED OF 40MPH OR MORE REQUIRE A POURED MITERED END SECTION.

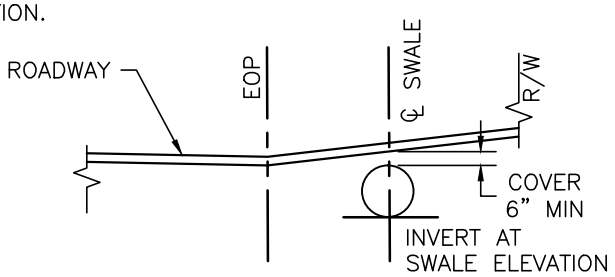

SECTION VIEW

DRIVEWAY W/CULVERT

LEGEND

EOP	EDGE OF PAVEMENT
℄	CENTERLINE
R/W	RIGHT-OF-WAY
MINIMUM	MINIMUM
MES	MITERED END SECTION

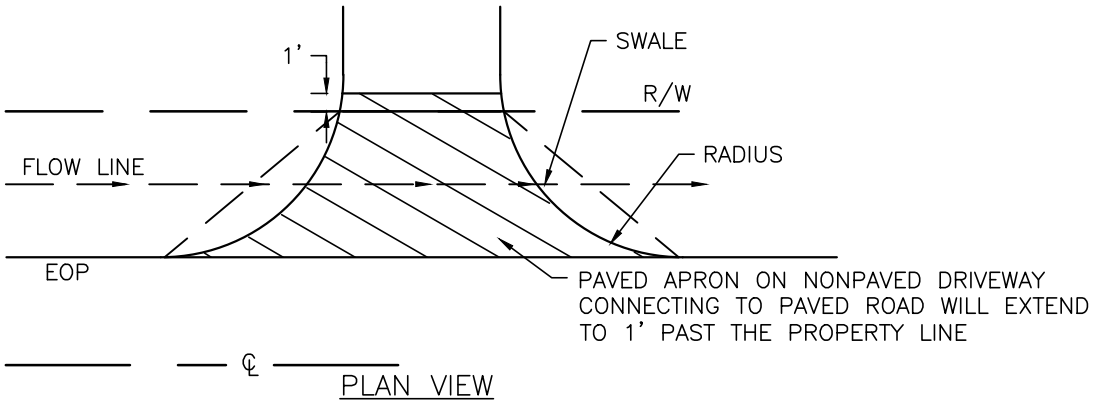

PLAN VIEW

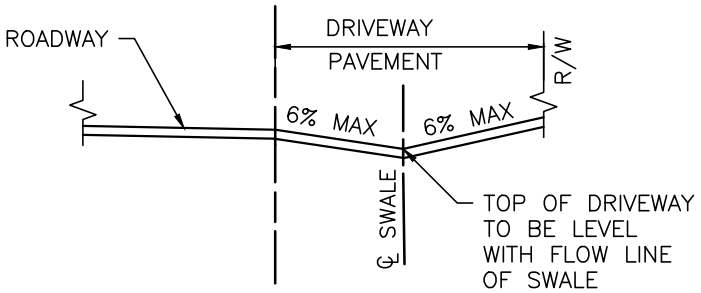

SECTION VIEW

DRIVEWAY W/SWALE

Marion County FLORIDA OFFICE OF THE COUNTY ENGINEER	MCBCC ADOPTED XX/XX/XX REVISION #	DRIVEWAY W/CULVERT & DRIVEWAY W/SWALE	7 EN 025

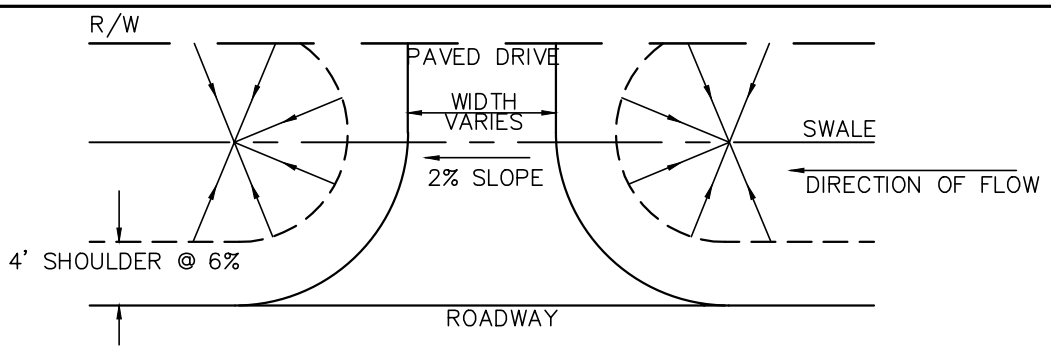

PLAN VIEW

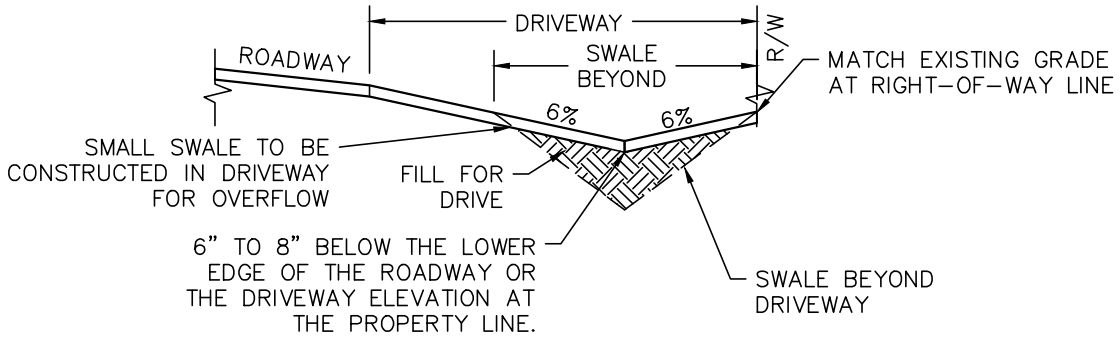

SECTION VIEW

DRIVEWAYS W/DITCH BLOCK

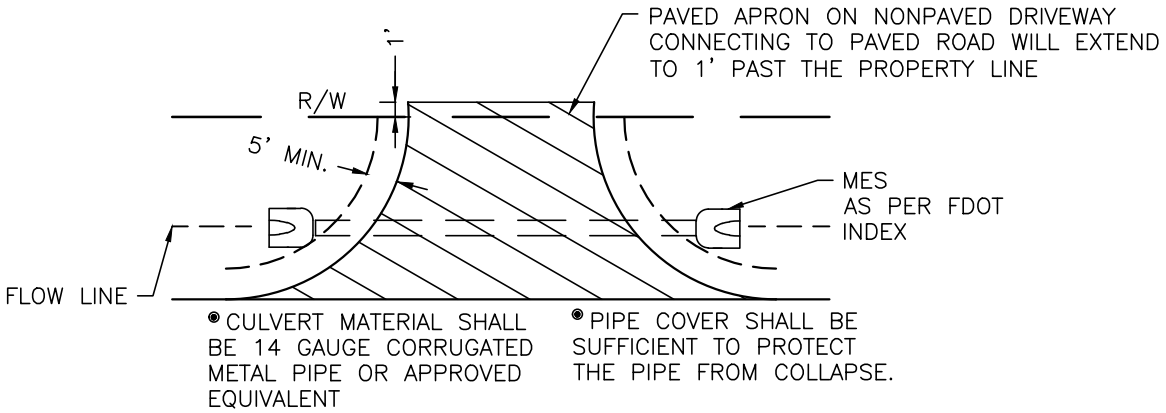

PLAN VIEW

LEGEND

MIN	MINIMUM
℄	CENTERLINE
R/W	RIGHT-OF-WAY
MES	MITERED END SECTION

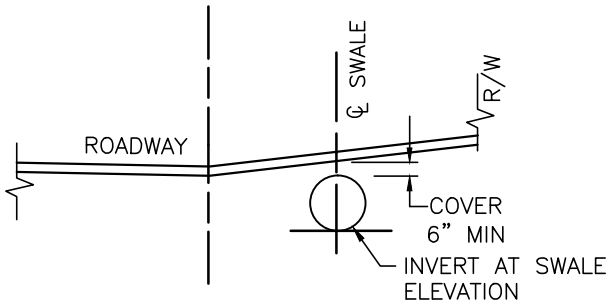

SECTION VIEW

DRIVEWAYS W/CULVERT & CONCRETE MITERED END SECTIONS

Marion County FLORIDA OFFICE OF THE COUNTY ENGINEER	MCBCC ADOPTED XX/XX/XX REVISION #	DRIVEWAY W/DITCH BLOCK & DRIVEWAY W/CULVERT & CONCRETE MITERED END SECTION	7 EN 026

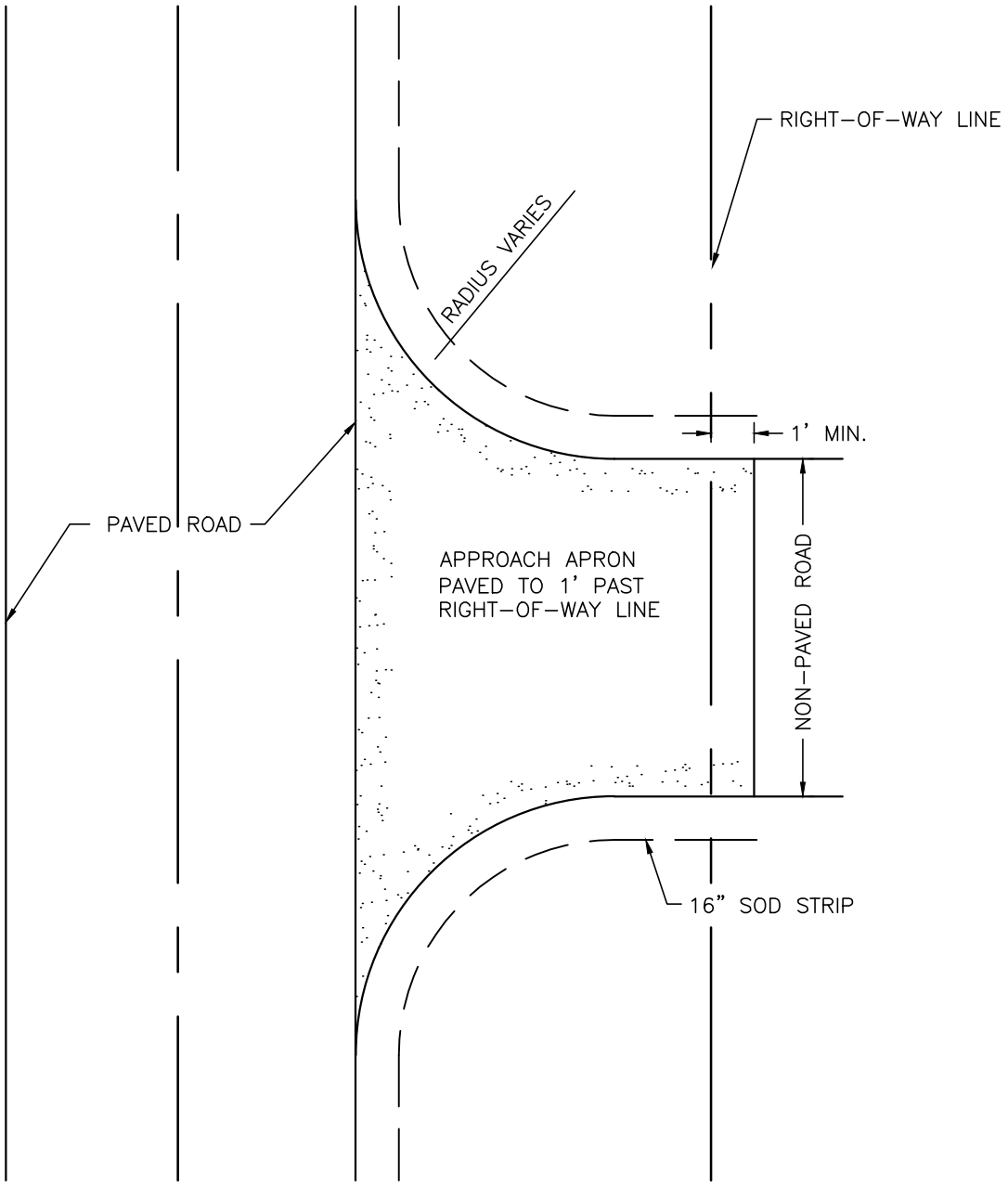

Marion County FLORIDA OFFICE OF THE COUNTY ENGINEER	MCBCC ADOPTED XX/XX/XX REVISION #	PAVED APPROACH APRON	7 EN 027

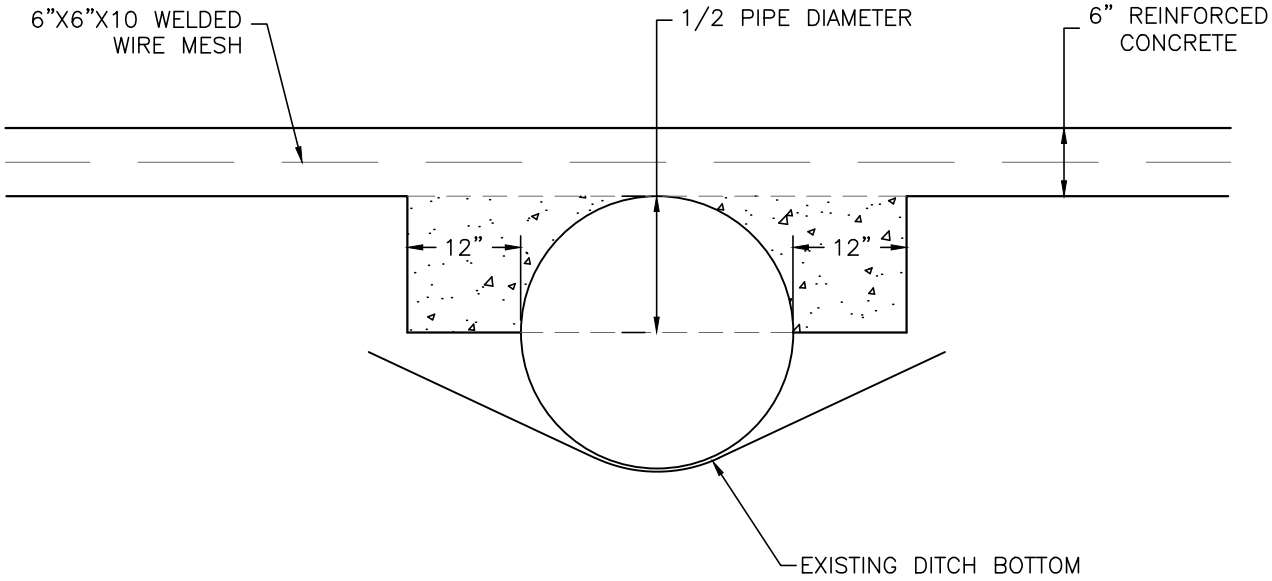

NOTE:
PLACE PIPE AT DITCH BOTTOM AND COVER WITH FILL. THEN CUT OUT AN AREA ON EACH SIDE OF THE PIPE 12" WIDE AND 1/2 THE PIPE DIAMETER DEEP, (ie: FOR A 15" PIPE CUT OUT 7-1/2" DEEP) AND FILL WITH CONCRETE.

Marion County FLORIDA OFFICE OF THE COUNTY ENGINEER	MCBCC ADOPTED XX/XX/XX REVISION #	SADDLE FOR DRIVEWAY CULVERT	7 EN 028

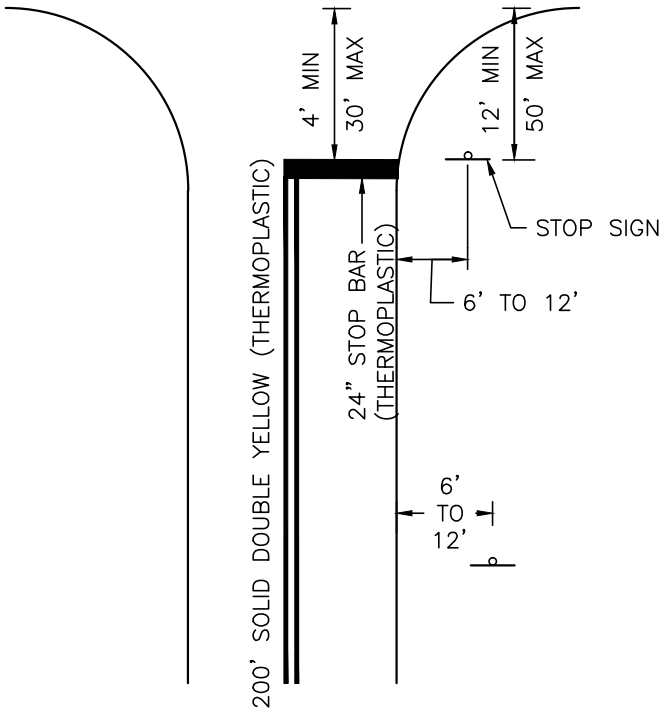

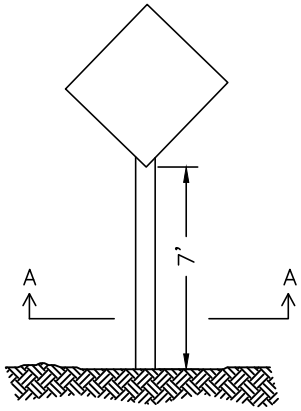

TYPICAL TRAFFIC CONTROL SIGN

NOTE:
DOUBLE SOLID STRIPING IS REQUIRED ON ALL ROADS APPROACHING ARTERIAL, COLLECTOR AND MAJOR LOCAL ROADS

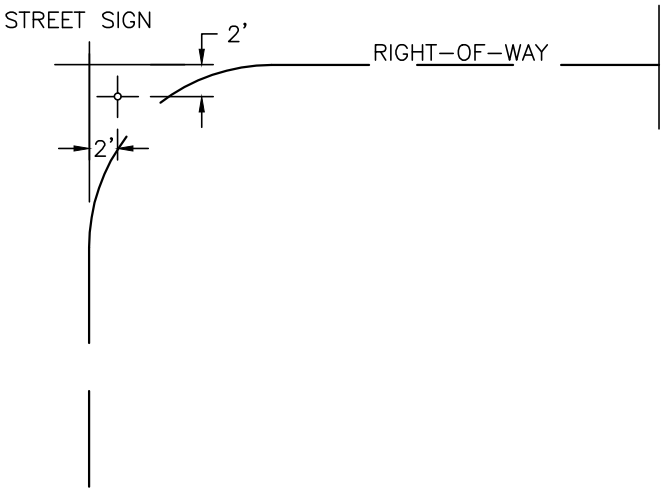

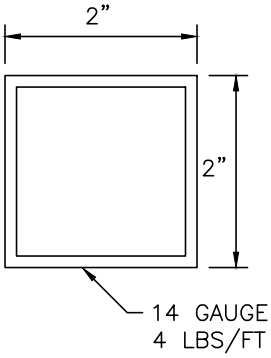

SECTION A–A

LEGEND

MIN	MINIMUM
MAX	MAXIMUM
—o—	TRAFFIC SIGN

Marion County FLORIDA OFFICE OF THE COUNTY ENGINEER	MCBCC ADOPTED XX/XX/XX	INTERSECTION SIGN AND STRIPING DETAIL	7
	REVISION #		EN 029

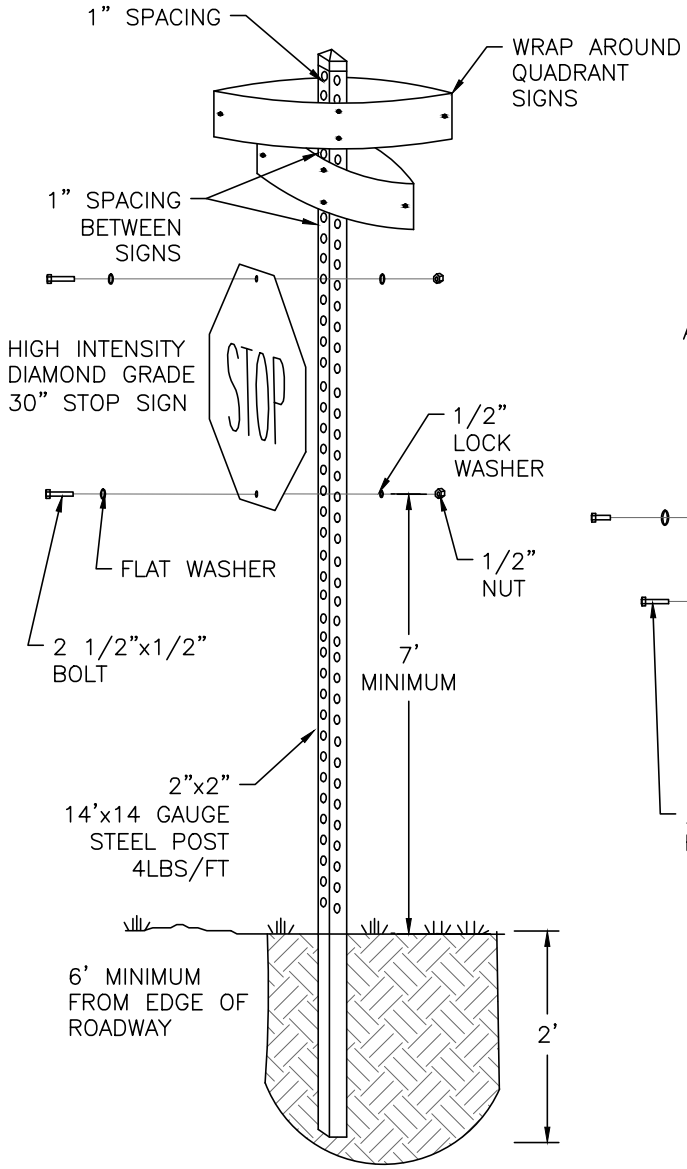

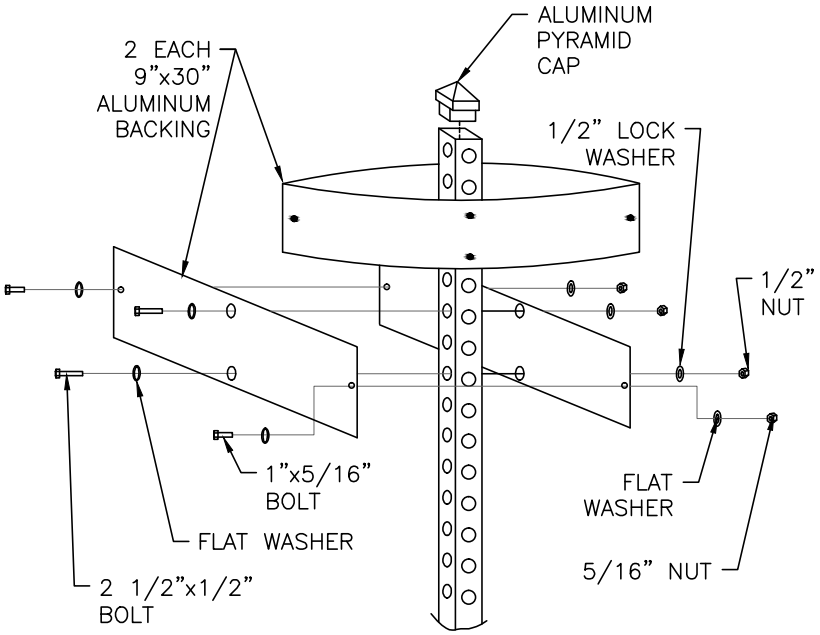

Marion County FLORIDA OFFICE OF THE COUNTY ENGINEER	MCBCC ADOPTED XX/XX/XX REVISION #	COMBINED STREET NAME & STOP SIGN INSTALLATION	7 EN 030

GREEN LETTERS ON A WHITE BACKGROUND – PRIVATE OR NON–COUNTY MAINTAINED
WHITE LETTERS ON A GREEN BACKGROUND – PUBLIC OR COUNTY MAINTAINED

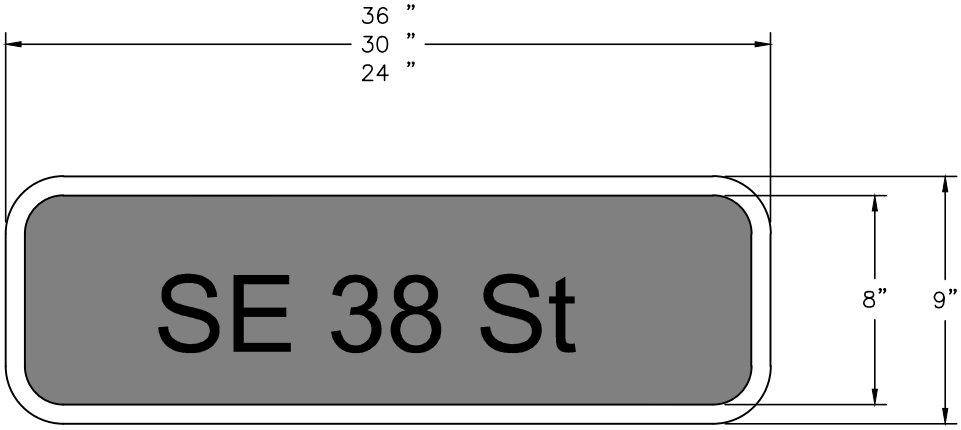

HELVETICA MED. COMP. AK REV. A

HIGH–INTENSITY BACKGROUND WITH TRANSPARENT
GREEN FILM OVERLAY. DIE–CUT LETTERS

Marion County FLORIDA OFFICE OF THE COUNTY ENGINEER	MCBCC ADOPTED XX/XX/XX REVISION #	STREET SIGN	7 EN 031

LEGEND

DIA DIAMETER

O.D. OUTSIDE DIAMETER

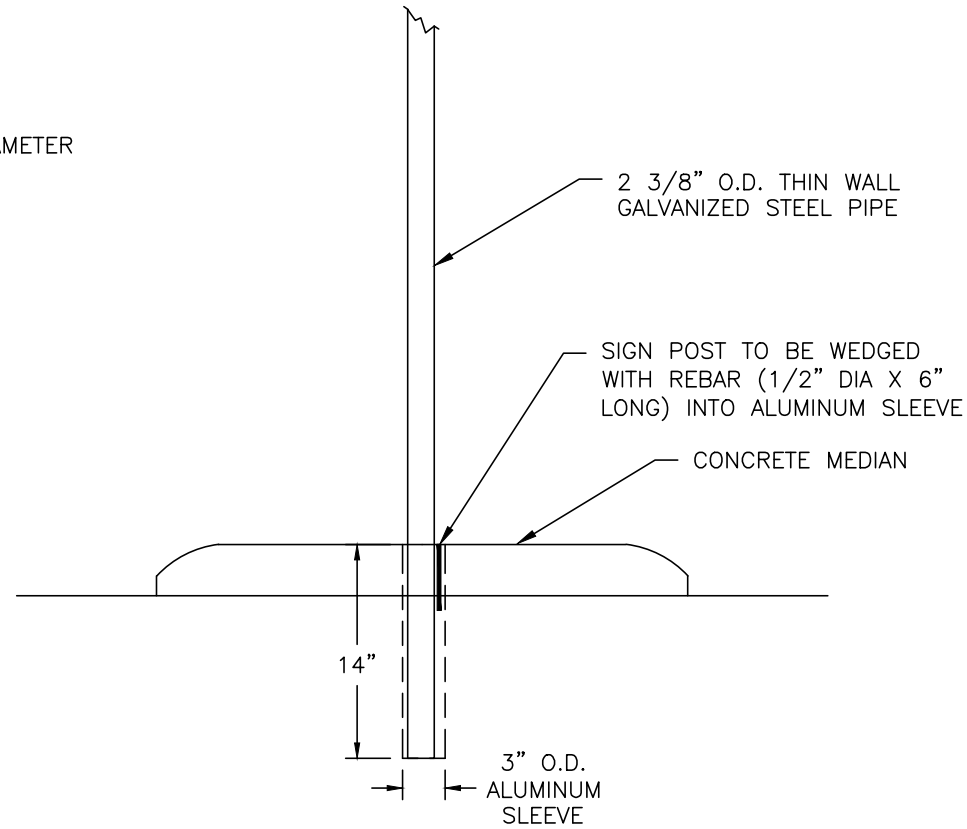

SECTION A–A

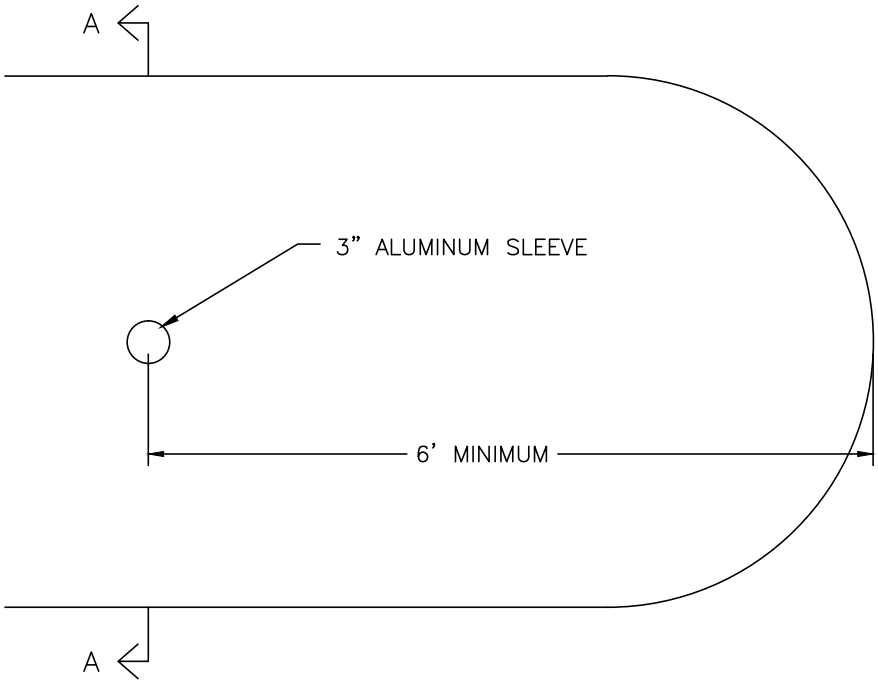

TOP VIEW MEDIAN NOSE

Marion County FLORIDA OFFICE OF THE COUNTY ENGINEER	MCBCC ADOPTED XX/XX/XX REVISION #	TRAFFIC SIGN INSTALLATION INTO CONCRETE MEDIAN	7 EN 032

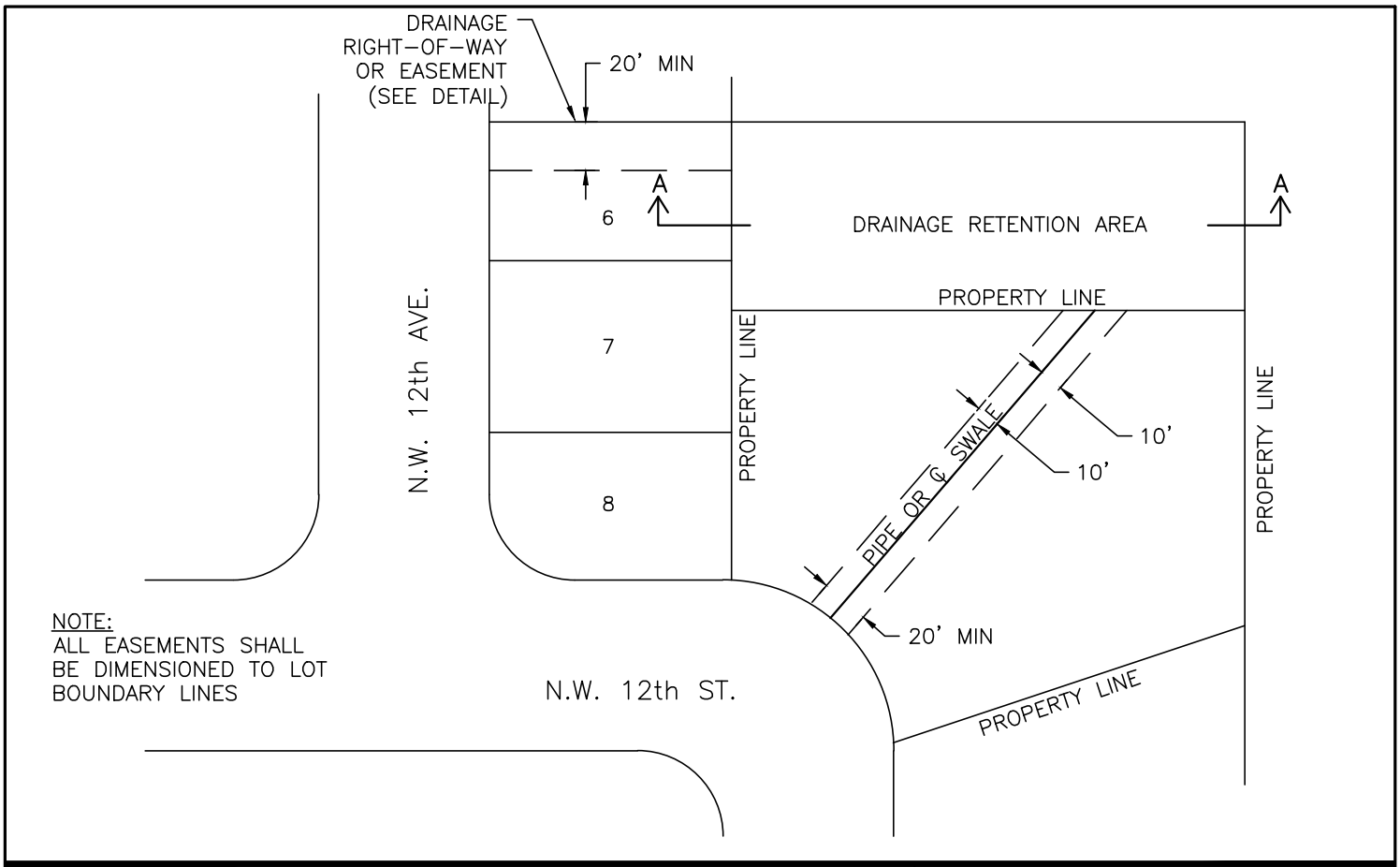

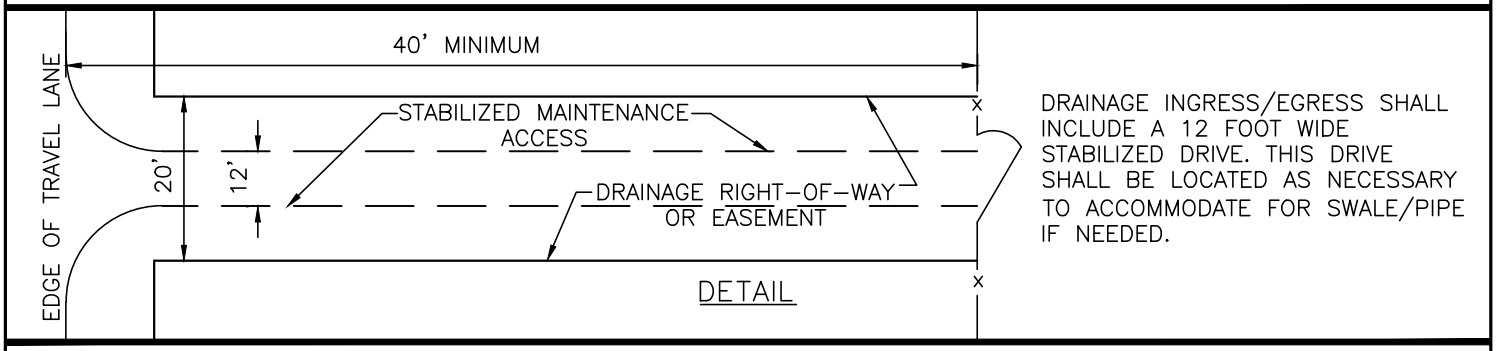

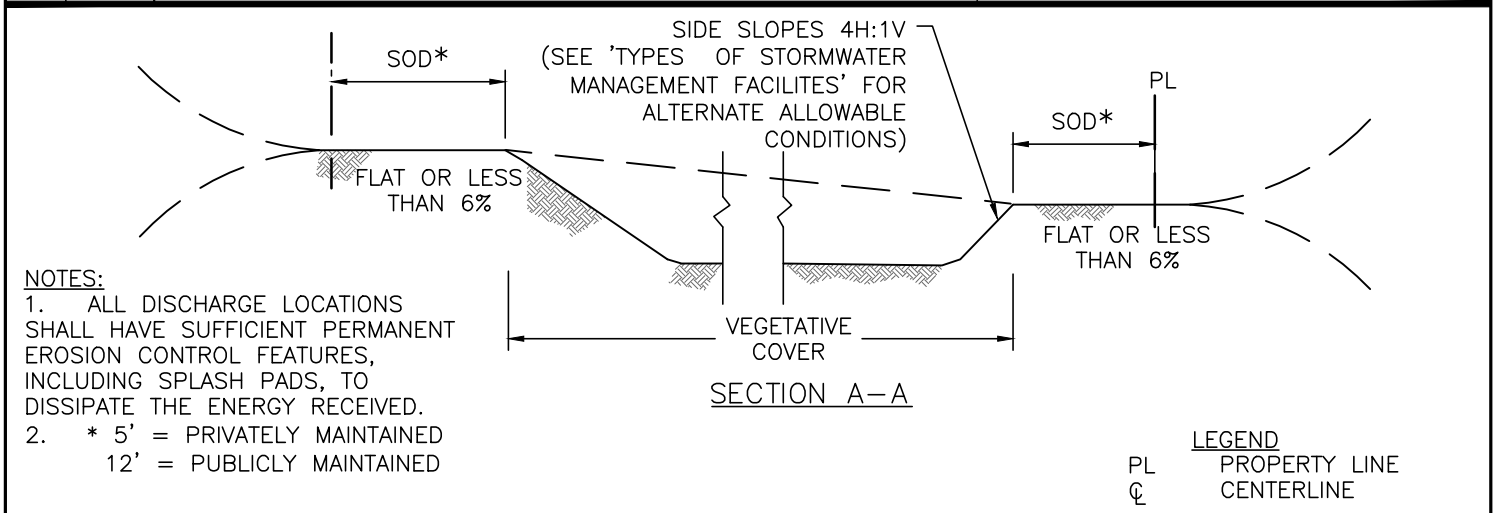

NOTES:
1. ALL DISCHARGE LOCATIONS SHALL HAVE SUFFICIENT PERMANENT EROSION CONTROL FEATURES, INCLUDING SPLASH PADS, TO DISSIPATE THE ENERGY RECEIVED.
2. * 5' = PRIVATELY MAINTAINED
   12' = PUBLICLY MAINTAINED

LEGEND
PL PROPERTY LINE
℄ CENTERLINE

Marion County FLORIDA OFFICE OF THE COUNTY ENGINEER	MCBCC ADOPTED XX/XX/XX REVISION #	DRAINAGE RETENTION AREA (PUBLICLY OR PRIVATELY MAINTAINED SUBDIVISIONS)	7 EN 033

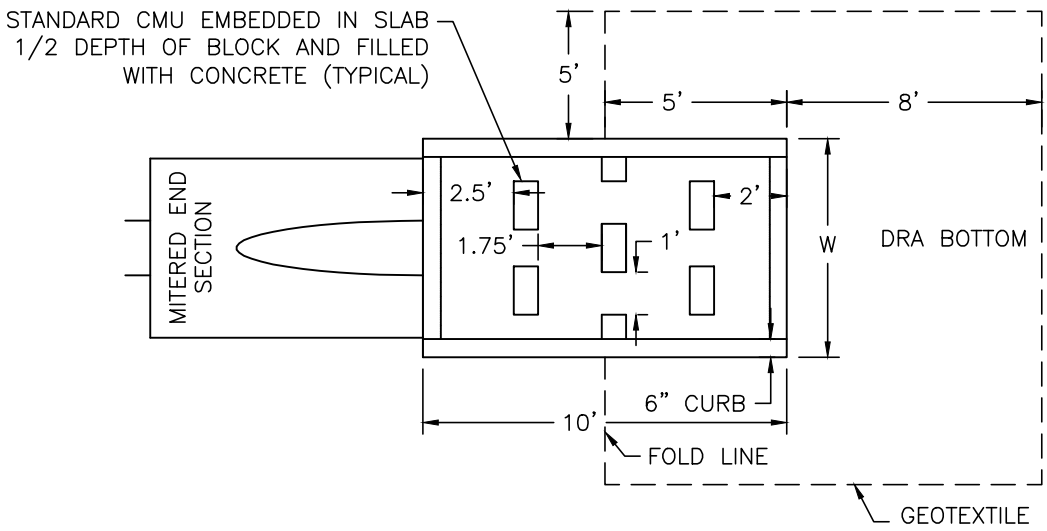

PIPE SIZE	WIDTH	CMU	
		8 x 16	8 x 8
15"	6'	3	2
18"	7'	5	0
24"	7'	5	0
30"	8'	5	2
36"	9'	7	0
42"	9'	7	0

NOTES:
1. BLOCK CONFIGURATION VARIES ACCORDING TO PIPE SIZE.
2. GEOTEXTILE, WHEN REQUIRED, SHALL BE INSTALLED ACCORDING TO MANUFACTURER'S RECOMMENDATIONS. FASTEN FABRIC TO CONCRETE STRUCTURE PER FDOT INDEX 281.
3. SPLASH PADS WITH ELLIPTICAL PIPE SHALL BE PAID UNDER THE CONTRACT UNIT PRICE FOR THE EQUIVALENT WIDTH OF CIRCULAR SIZE IN TABLE.

LEGEND

CMU	CONCRETE MASONRY UNIT
DRA	DRAINAGE RETENTION AREA
MES	MITERED END SECTION
MIN	MINIMUM

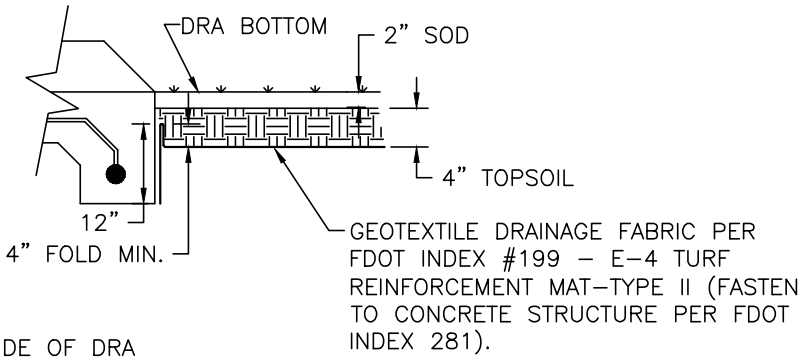

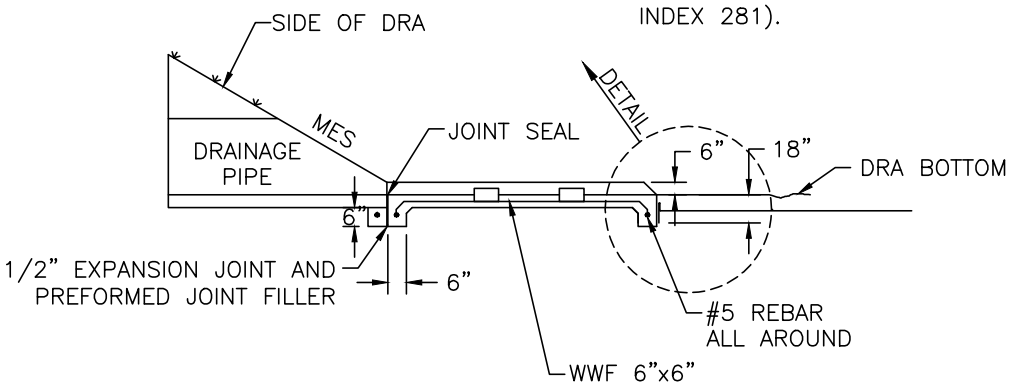

Marion County FLORIDA OFFICE OF THE COUNTY ENGINEER	MCBCC ADOPTED XX/XX/XX REVISION #	SPLASH PAD WITH DISSIPATER	7 EN 034

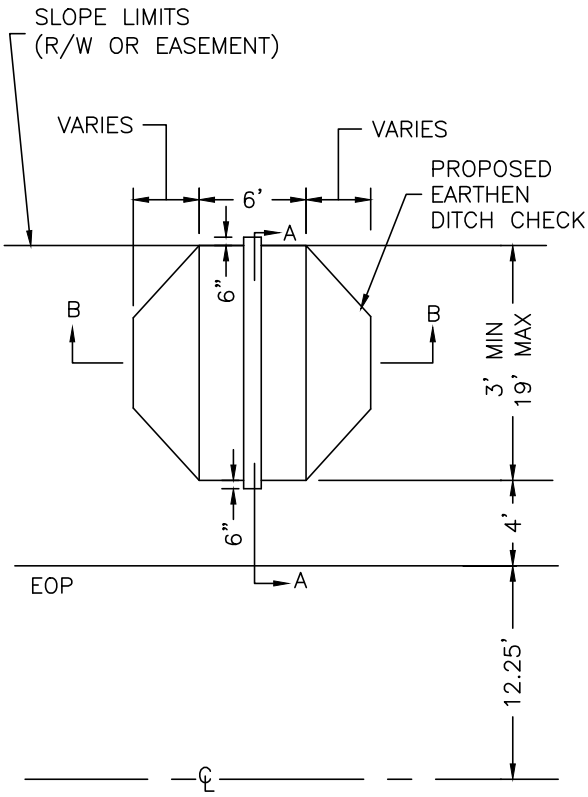

PLAN VIEW

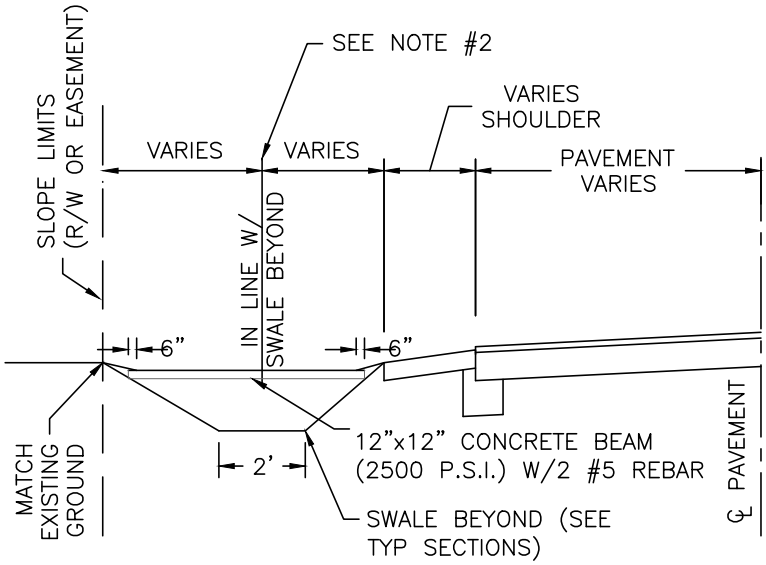

SECTION A–A

NOTES:

1. SECTIONS ARE SYMMETRICAL ABOUT CENTERLINE. SEE PLAN PROFILES FOR STATION & LOCATION LEFT OR RIGHT.
2. TOP ELEVATION OF DITCH CHECK SHALL BE EITHER 0.2' LOWER THAN SLOPE LIMITS OR 0.1' LOWER THAN LIMEROCK BASE. (WHICHEVER IS ULTIMATE LOW)

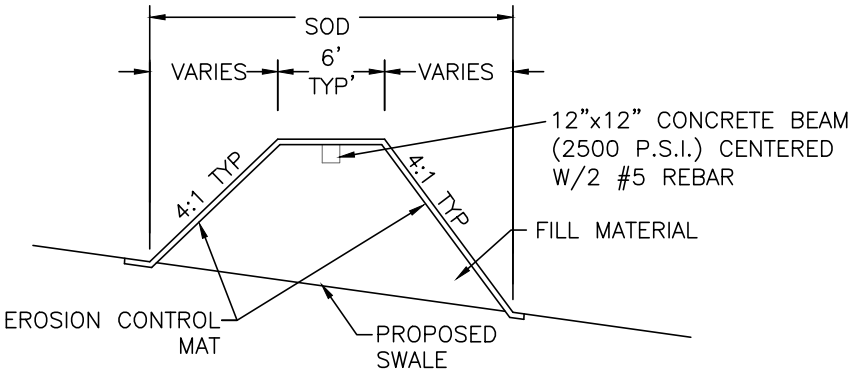

SECTION B–B

LEGEND

MIN	MINIMUM
MAX	MAXIMUM
EOP	EDGE OF PAVEMENT
℄	CENTERLINE
R/W	RIGHT–OF–WAY
TYP	TYPICAL

Marion County FLORIDA OFFICE OF THE COUNTY ENGINEER	MCBCC ADOPTED XX/XX/XX	DITCH CHECK/BLOCK	7
	REVISION #		EN 035

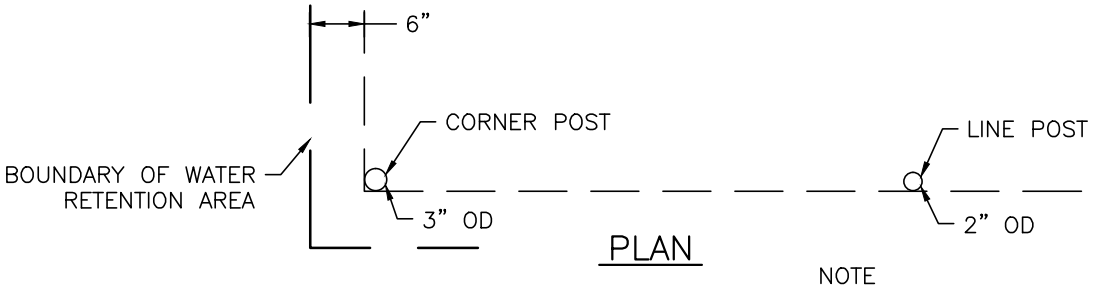

PLAN

NOTE
FENCE CONSTRUCTION SHALL BE IN ACCORDANCE WITH FDOT DESIGN STANDARDS AND FDOT STANDARD SPECIFICATIONS

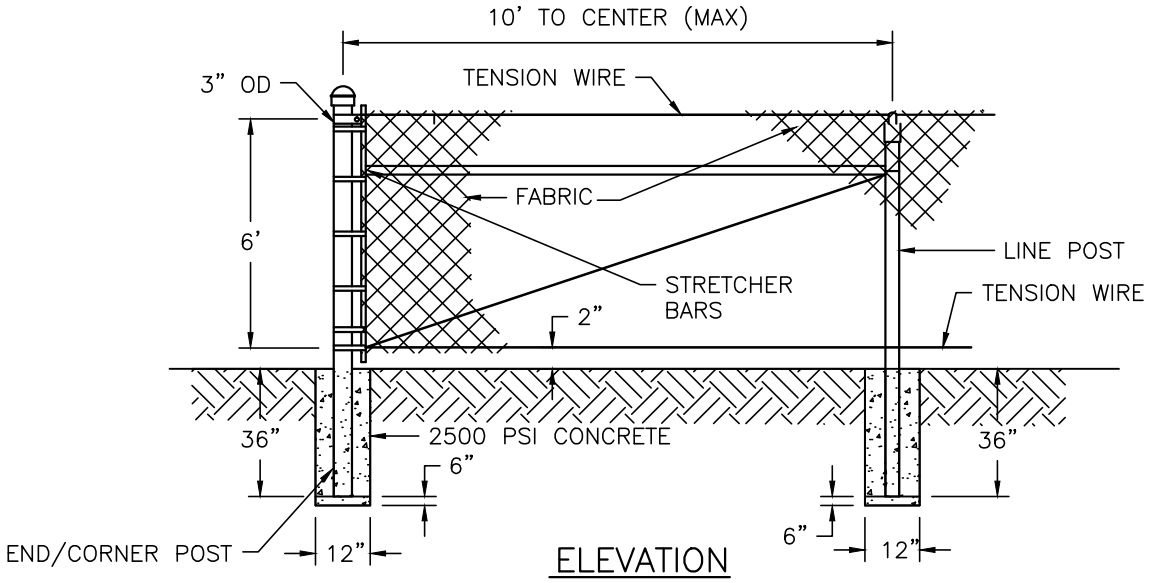

ELEVATION

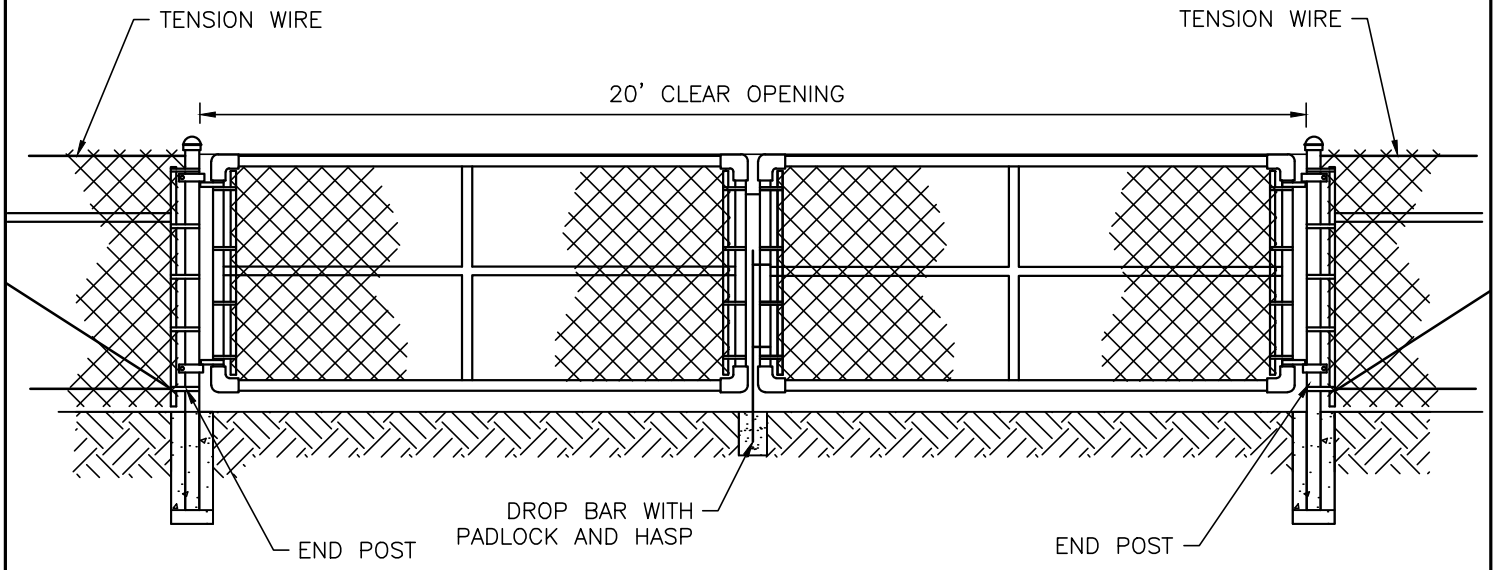

GATE ELEVATION

Marion County FLORIDA OFFICE OF THE COUNTY ENGINEER	MCBCC ADOPTED XX/XX/XX REVISION #	FENCE DETAILS	7 EN 036

NO FENCE, WALL, HEDGE, SHRUB, STRUCTURE OR OTHER OBSTRUCTION TO VISION, BETWEEN A HEIGHT OF TWO AND ONE–HALF FEET AND EIGHT FEET ABOVE THE CENTER LINE GRADES OF INTERSECTING STREETS SHALL BE ERECTED, PLACED OR MAINTAINED WITHIN THE TRIANGLE SHOWN BELOW.

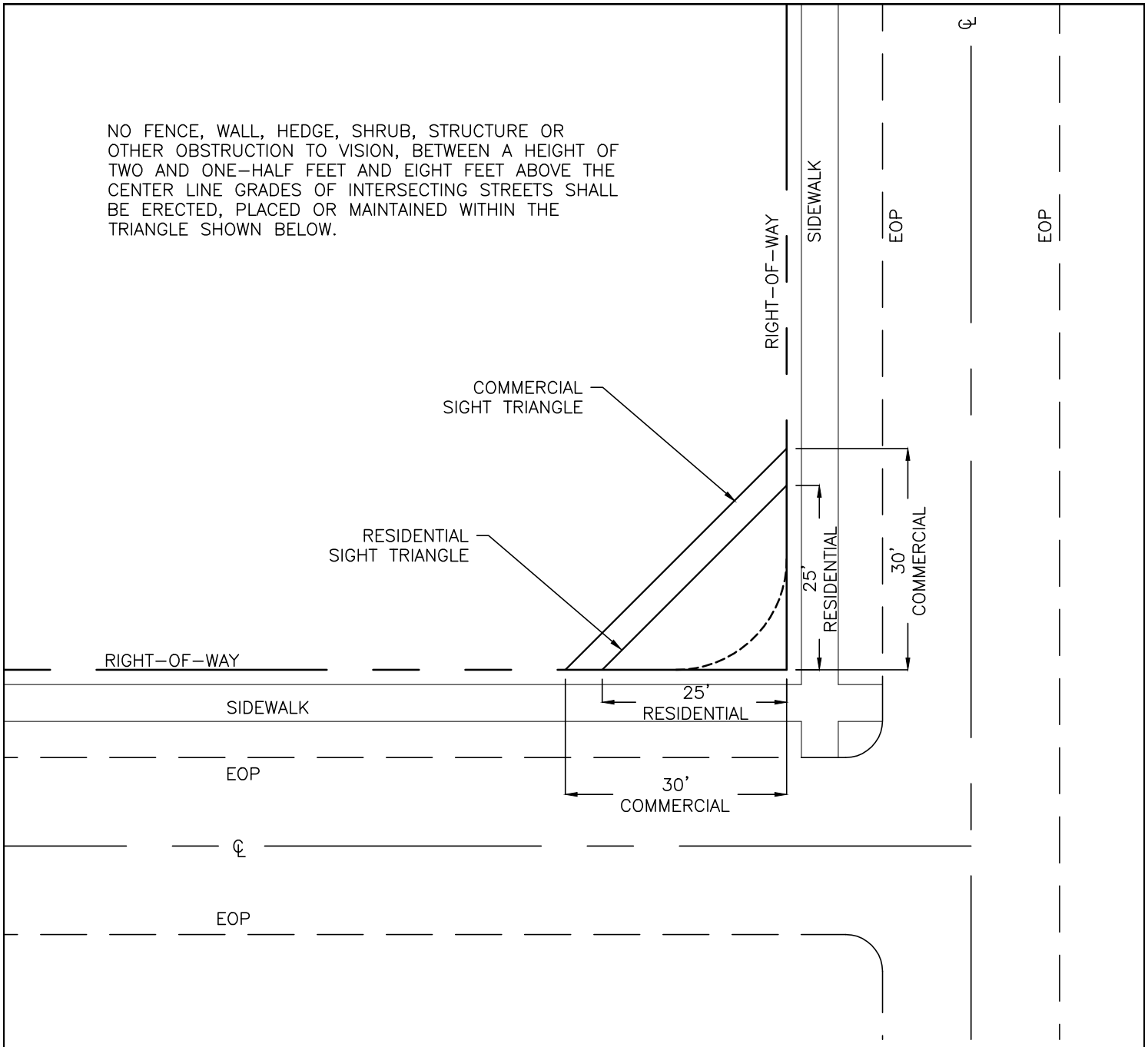

LEGEND

EOP EDGE OF PAVEMENT

℄ CENTERLINE OF ROADWAY

Marion County FLORIDA OFFICE OF THE COUNTY ENGINEER	MCBCC ADOPTED XX/XX/XX	SIGHT TRIANGLE	7
	REVISION #		EN 037

Marion County FLORIDA
UTILITIES

MCBCC ADOPTED
XX/XX/XX
REVISION #

CHAIN LINK FENCE

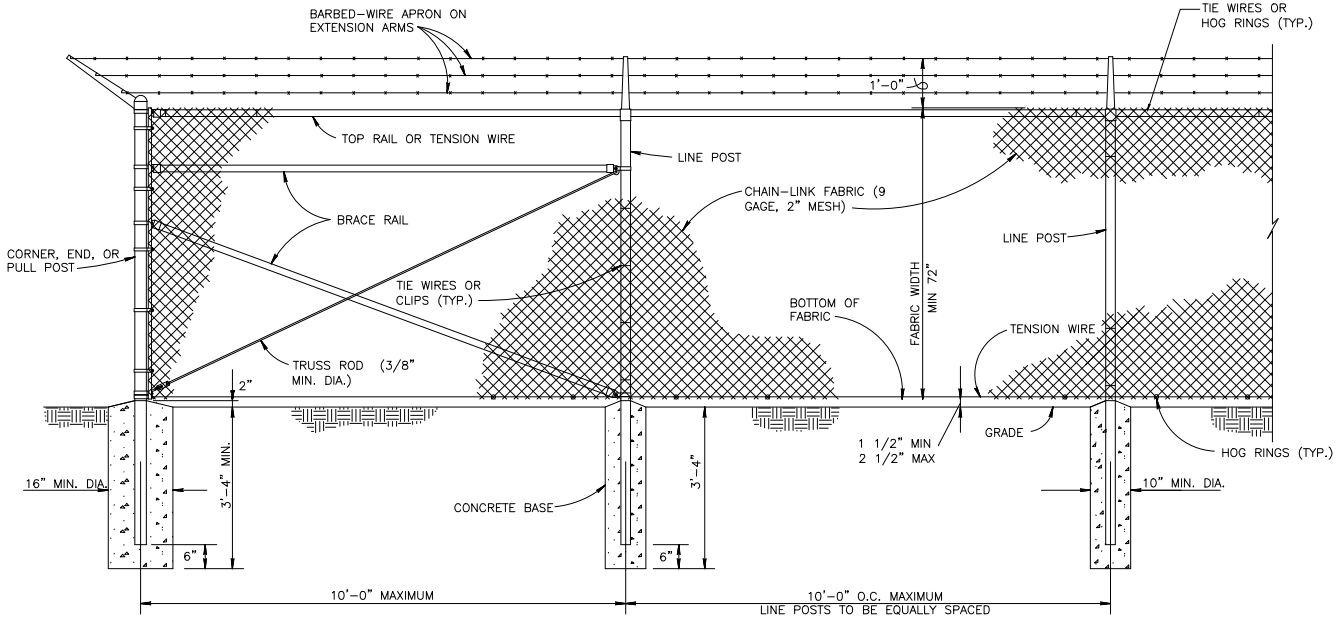

1 CHAIN-LINK SECURITY FENCE DETAIL

NO SCALE

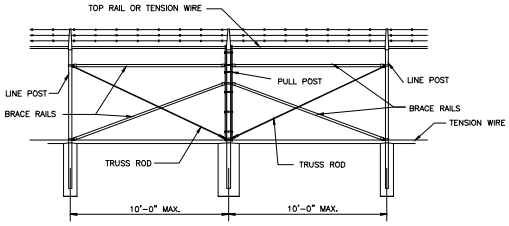

1 BRACE PANEL DETAIL

NO SCALE

NOTE:
PROVIDE BRACE PANEL WHENEVER STRAIGHT RUNS EXCEED 500 FEET.

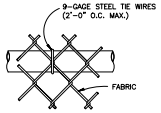

TOP OR BRACE RAIL ATTACHMENT

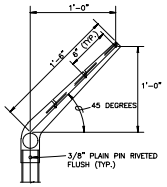

LINE POST

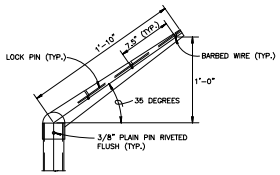

CORNER POST

EXTENSION ARM DETAILS

NO SCALE

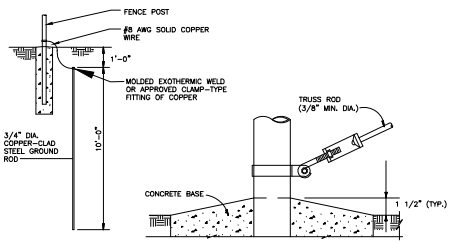

GROUNDING DETAIL

NO SCALE

1 TRUSS ROD AND BAND

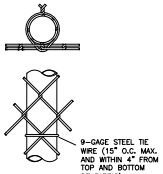

ROUND POST

LINE POST ATTACHMENTS

NO SCALE

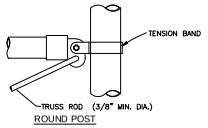

ROUND POST

BRACE RAIL CLAMP DETAILS

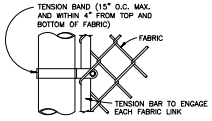

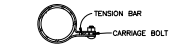

END OR GATE POST DETAIL

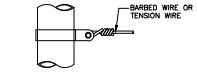

TENSION BAND DETAIL

FASTENING DETAILS

NO SCALE

7
UT
100

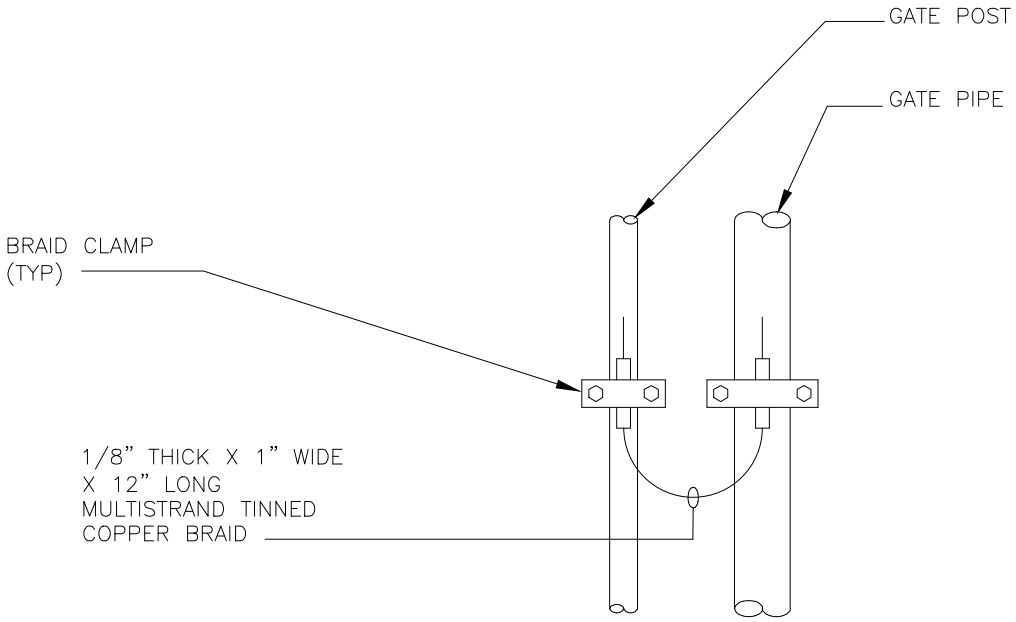

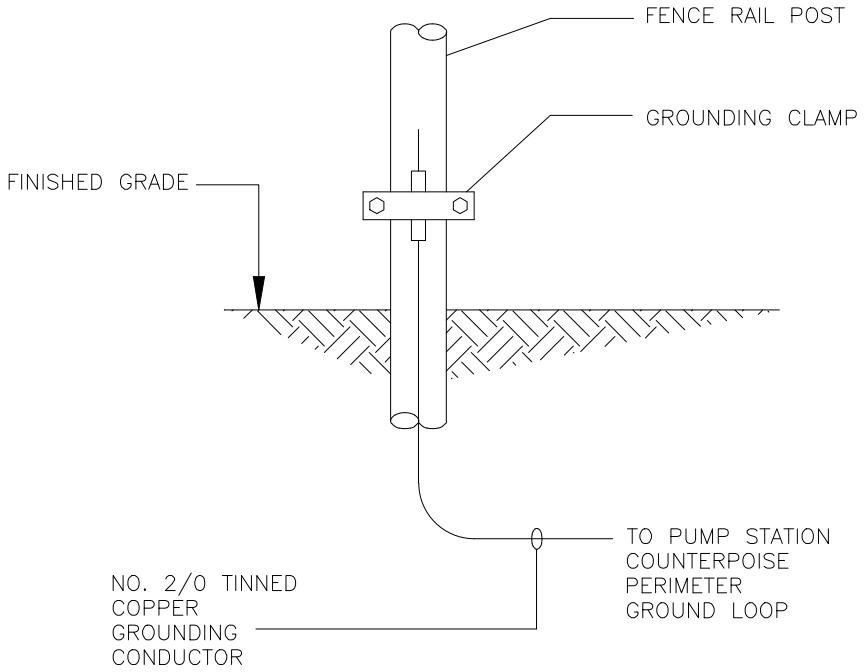

Marion County FLORIDA UTILITIES	MCBCC ADOPTED XX/XX/XX	FENCE POST GROUNDING (TYPICAL)	7
	REVISION #		UT 101

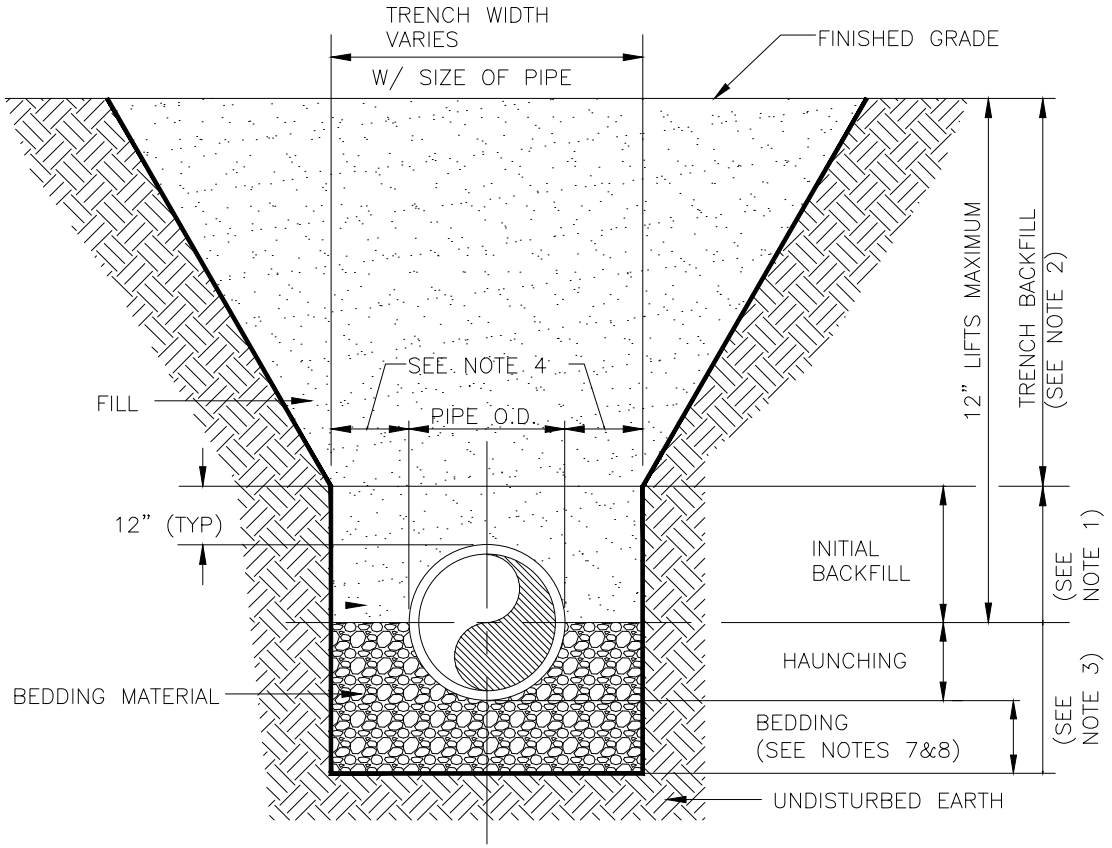

NOTES:

1. INITIAL BACKFILL: FILL COMPACTED TO 95% (98% UNDER PAVEMENT) OF THE MAXIMUM DENSITY AS PER AASHTO T-180.
2. TRENCH BACKFILL: FILL COMPACTED TO 95% (98% UNDER PAVEMENT) OF THE MAXIMUM DENSITY AS PER AASHTO T-180.
3. TYPE A BEDDING MATERIAL SHALL CONFORM TO FDOT NO. 57 AGGREGATE.
4. 15" MAX. (12" MIN.) FOR PIPE DIAMETER LESS THAN 24" AND 24" MAX (12" MIN) FOR PIPE DIAMETER 24" AND LARGER.
5. WATER SHALL NOT BE PERMITTED IN THE TRENCH DURING CONSTRUCTION.
6. ALL PIPE TO BE INSTALLED WITH BELL FACING UPSTREAM TO THE DIRECTION OF THE FLOW.
7. BEDDING DEPTH SHALL BE 4" MINIMUM FOR PIPE DIAMETER UP TO 12" AND 6" MINIMUM FOR PIPE DIAMETER 16" AND LARGER.
8. DEPTH FOR REMOVAL OF UNSUITABLE MATERIAL SHALL GOVERN DEPTH OF BEDDING ROCK BELOW THE PIPE. UTILITIES SHALL DETERMINE IN THE FIELD REQUIRED REMOVAL OF UNSUITABLE MATERIAL TO REACH SUITABLE FOUNDATION.
9. FINAL RESTORATION IN IMPROVED AREAS SHALL BE IN COMPLIANCE WITH ALL APPLICABLE REGULATIONS OF GOVERNING AGENCIES. SURFACE RESTORATION WITHIN MARION COUNTY RIGHT-OF-WAY SHALL COMPLY WITH REQUIREMENTS OF R/W UTILIZATION REGULATIONS AND ROAD CONSTRUCTION SPECIFICATIONS.

Marion County FLORIDA UTILITIES	MCBCC ADOPTED XX/XX/XX	TYPE "A" BEDDING AND TRENCHING	7.6.1
	REVISION #		GU 105

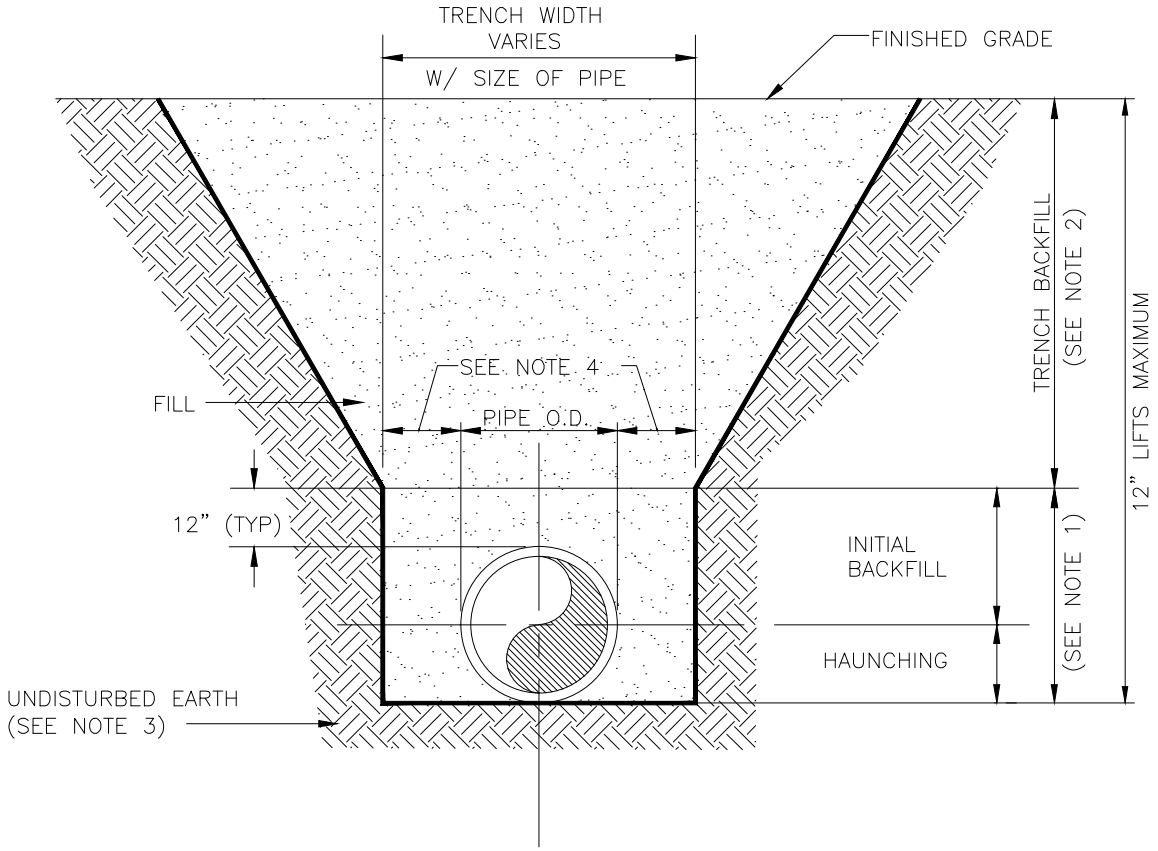

NOTES:

1. INITIAL BACKFILL AND HAUNCHING: FILL COMPACTED TO 95% (98% UNDER PAVEMENT) OF THE MAXIMUM DENSITY AS PER AASHTO T-180.
2. TRENCH BACKFILL: FILL COMPACTED TO 95% (98% UNDER PAVEMENT) OF THE MAXIMUM DENSITY AS PER AASHTO T-180.
3. PIPE BEDDING UTILIZING FILL OR BEDDING ROCK IN ACCORDANCE WITH TYPE A BEDDING AND TRENCHING DETAIL MAY BE REQUIRED AS DIRECTED BY UTILITIES.
4. 15" MAX. (12" MIN.) FOR PIPE DIAMETER LESS THAN 24" AND 24" MAX (12" MIN) FOR PIPE DIAMETER 24" AND LARGER.
5. WATER SHALL NOT BE PERMITTED IN THE TRENCH DURING CONSTRUCTION.
6. ALL PIPE TO BE INSTALLED WITH BELL FACING UPSTREAM TO THE DIRECTION OF THE FLOW.
7. FINAL RESTORATION IN IMPROVED AREAS SHALL BE IN COMPLIANCE WITH ALL APPLICABLE REGULATIONS OF GOVERNING AGENCIES. SURFACE RESTORATION WITHIN MARION COUNTY RIGHT-OF-WAY SHALL COMPLY WITH REQUIREMENTS OF RIGHT-OF-WAY UTILIZATION REGULATIONS AND ROAD CONSTRUCTION SPECIFICATIONS.

Marion County FLORIDA UTILITIES	MCBCC ADOPTED XX/XX/XX	TYPE "B" BEDDING AND TRENCHING	7.6.1
	REVISION #		GU 106

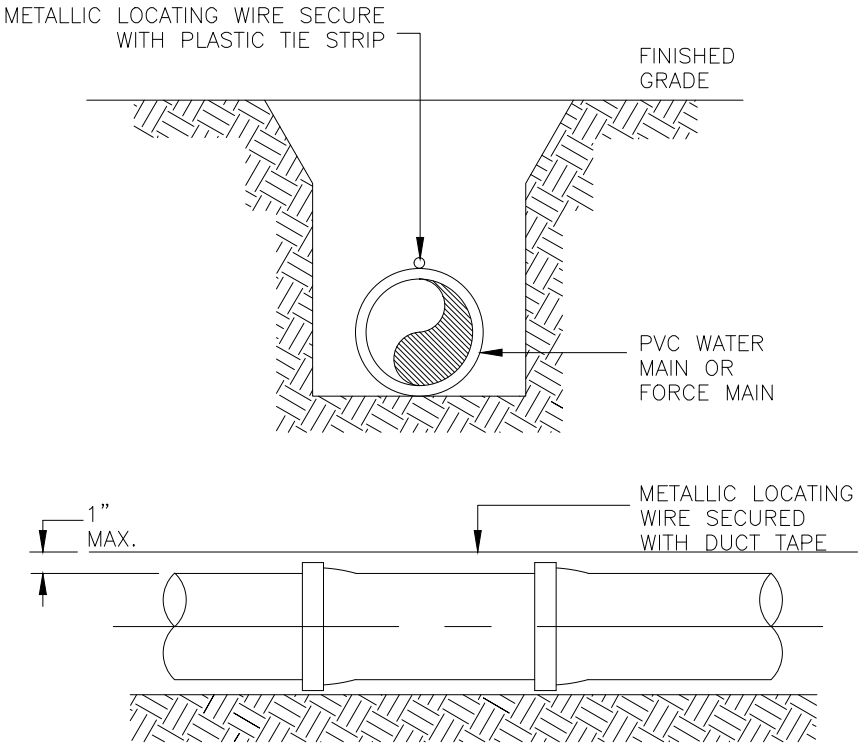

NOTES:

1. PVC PIPE SHALL REQUIRE INSULATED METALLIC LOCATING WIRE (14 GAUGE COPPER) CAPABLE OF DETECTION BY A CABLE LOCATOR AND SHALL BE BURIED DIRECTLY ABOVE THE CENTERLINE OF THE PIPE.
2. LOCATING WIRE SHALL TERMINATE AT EACH VALVE BOX AND BE CAPABLE OF EXTENDING 12" ABOVE TOP OF BOX IN SUCH A MANNER SO AS NOT TO INTERFERE WITH VALVE OPERATION.
3. USE DUCT TAPE AS NECESSARY TO HOLD WIRE DIRECTLY ON THE TOP OF THE PIPE.
4. ALL WIRE CONNECTIONS IN VALVE BOXES SHALL BE SPLICED TOGETHER AND TAPED.
5. FOR HORIZONTAL DIRECTIONAL DRILLING, UTILIZE 2 LOCATING WIRES WITH ALUMINUM TENSILE STRENGTH OF 1800 PSI.

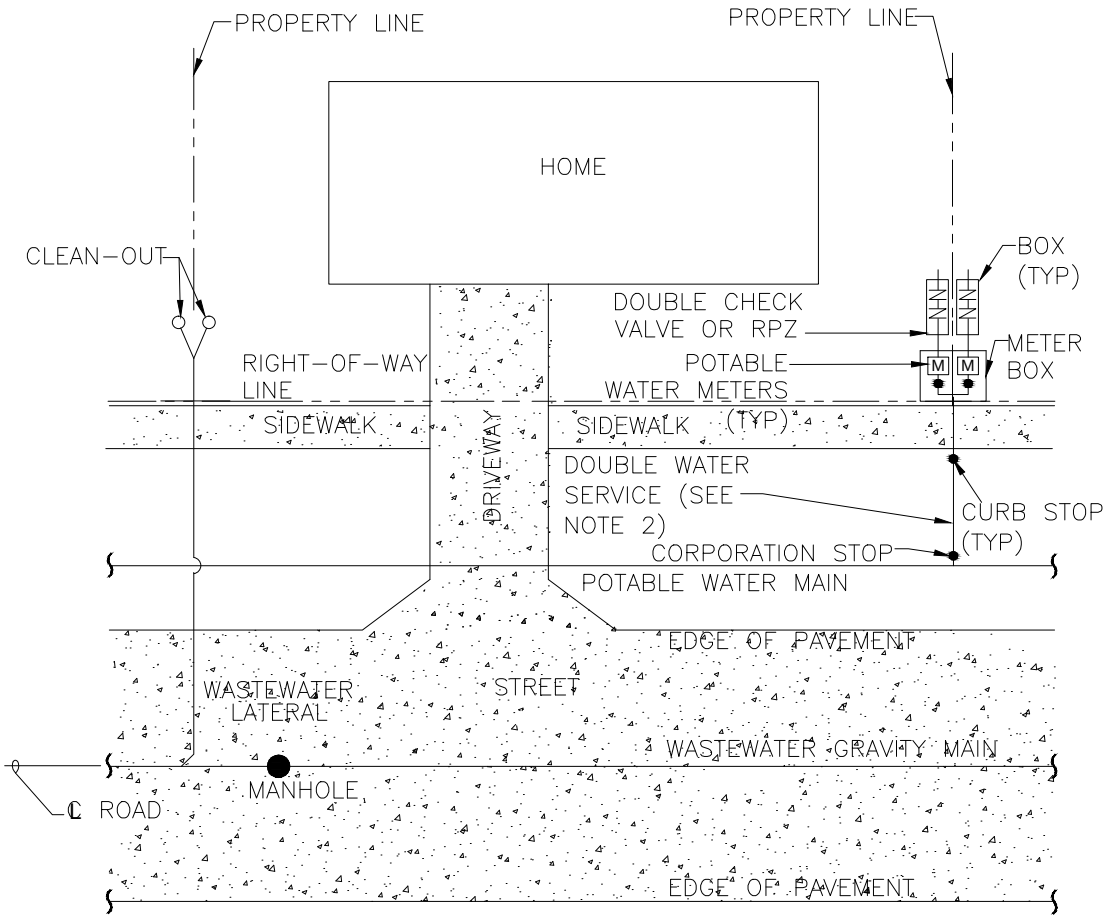

NOTE:

1. EACH POTABLE WATER SERVICE SHALL SERVE TWO LOTS IF RECLAIMED WATER IS AVAILABLE. EACH SERVICE SHALL BE EQUIPPED WITH A DUAL CHECK BACKFLOW PREVENTER.
2. EACH POTABLE WATER SERVICE SHALL SERVE ONE LOT IF RECLAIMED WATER IS UNAVAILABLE. BACKFLOW PREVENTERS ARE NOT REQUIRED.
3. SITEWORK CONTRACTOR SHALL INSTALL WATER,WASTEWATER AND RECLAIMED WATER SERVICES.
4. METER AND BOX SHALL BE INSTALLED BY OCU AND DUAL CHECK BACKFLOW PREVENTOR TO BE INSTALLED BY LICENSED BUILDING PLUMBING CONTRACTOR.
5. WASTEWATER LATERAL CLEAN-OUTS TO BE INSTALLED BY LICENSED BUILDING PLUMBING CONTRACTOR.
6. A DUAL CHECK VALVE DEVICE SHALL BE REQUIRED WHERE OTHER PRESSURIZED WATER SOURCES, INCLUDING SWIMMING POOLS, ARE PRESENT.

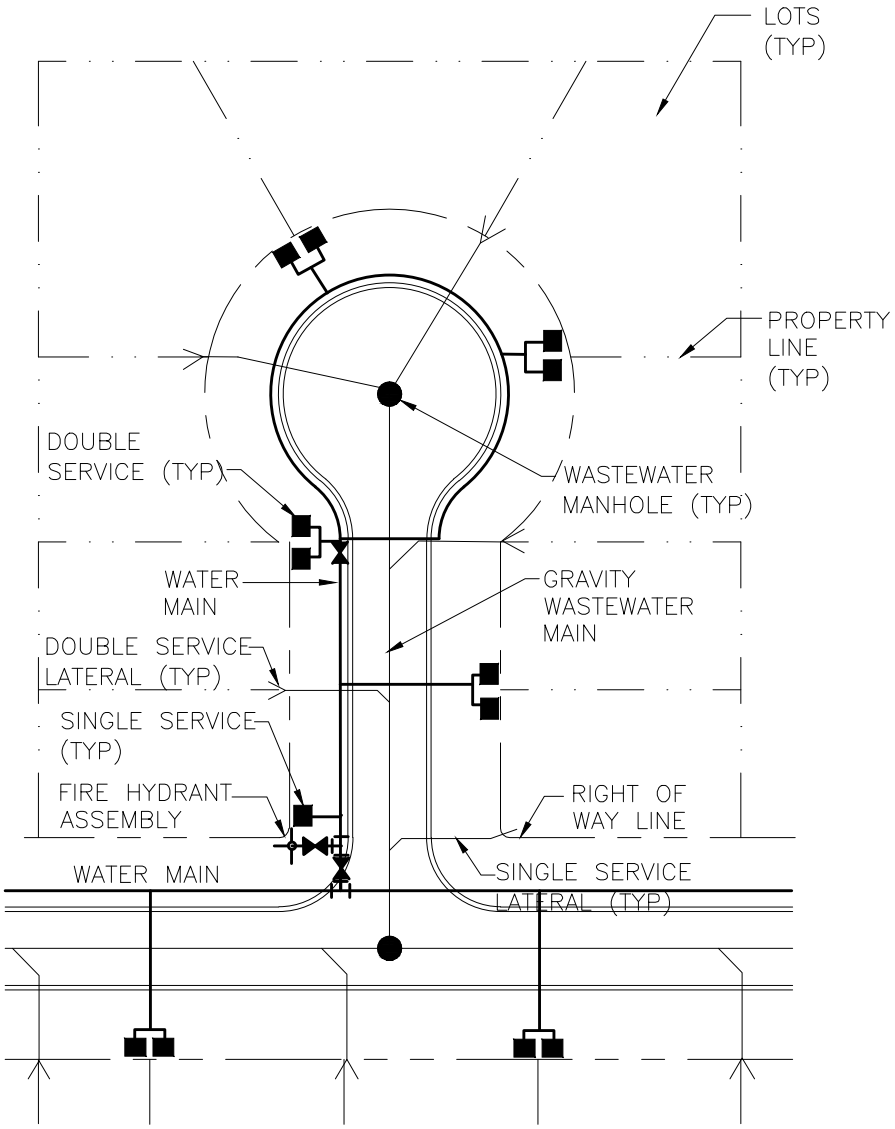

Marion County FLORIDA UTILITIES	MCBCC ADOPTED XX/XX/XX	SINGLE FAMILY RESIDENTIAL CUL-DE-SAC UTILITY PLAN	7
	REVISION #		UT 106

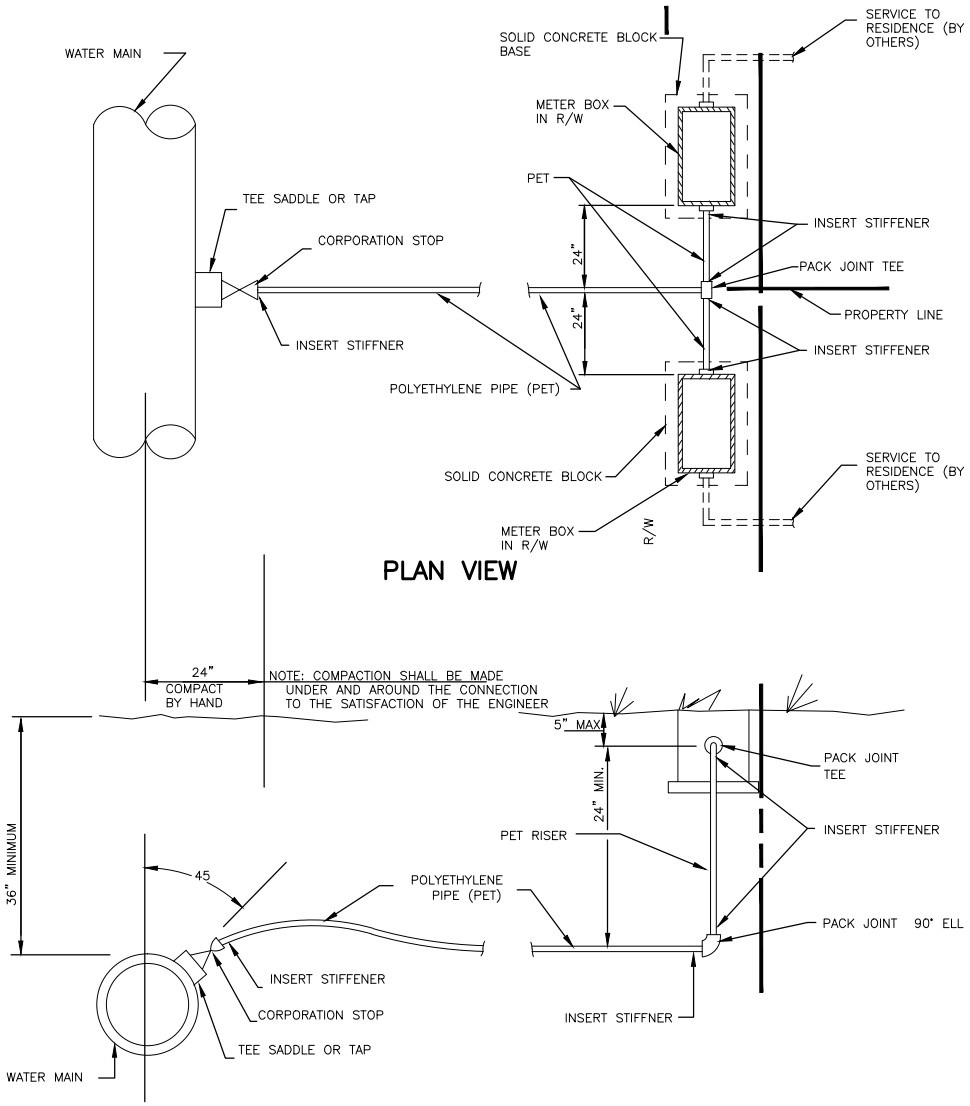

NOTES:

1. CURB STOP SHALL BE INSTALLED ON STREET SIDE OF THE SIDEWALK BETWEEN SIDEWALK AND CURB.
2. CONTRACTOR TO LOCATE CURB STOP BY PLACING A METER BOX FLUSH WITH FINISH GRADE.
3. PVC CASING TO BE USED UNDER PAVEMENT, EXTENDING A MINIMUM OF 5' ON EITHER SIDE OF THE PAVEMENT WHERE POSSIBLE.
4. CORP STOPS SHALL BE HORIZONTAL TO WATERMAINS.
5. LOCATE WIRE SHALL BE INSTALLED ON SERVICE LATERAL LINE.
6. PIPE AND FITTING SIZES TO BE DETERMINED BY SERVICE TYPE.

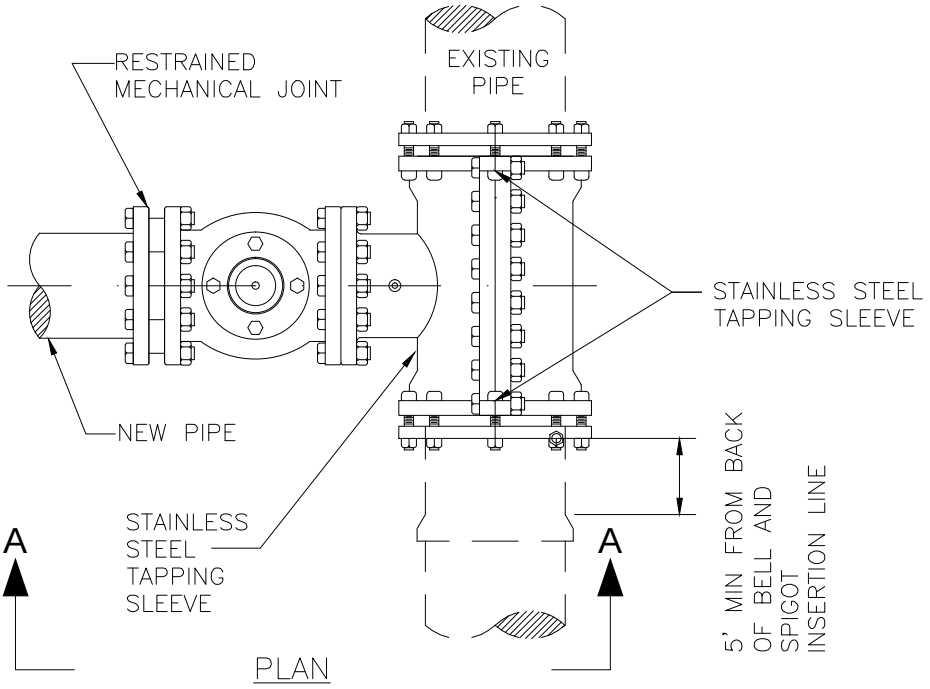

PLAN

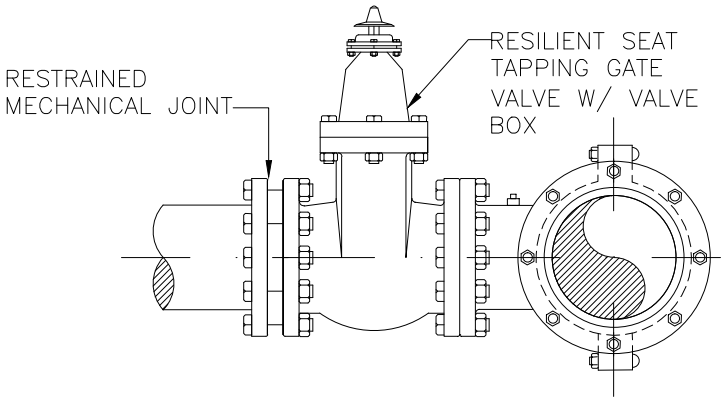

SECTION A – A

Marion County FLORIDA UTILITIES	MCBCC ADOPTED XX/XX/XX	MJ TAPPING SLEEVE AND GATE VALVE ASSEMBLY FOR WATER AND RECLAIMED WATER	7
	REVISION #		UT 108

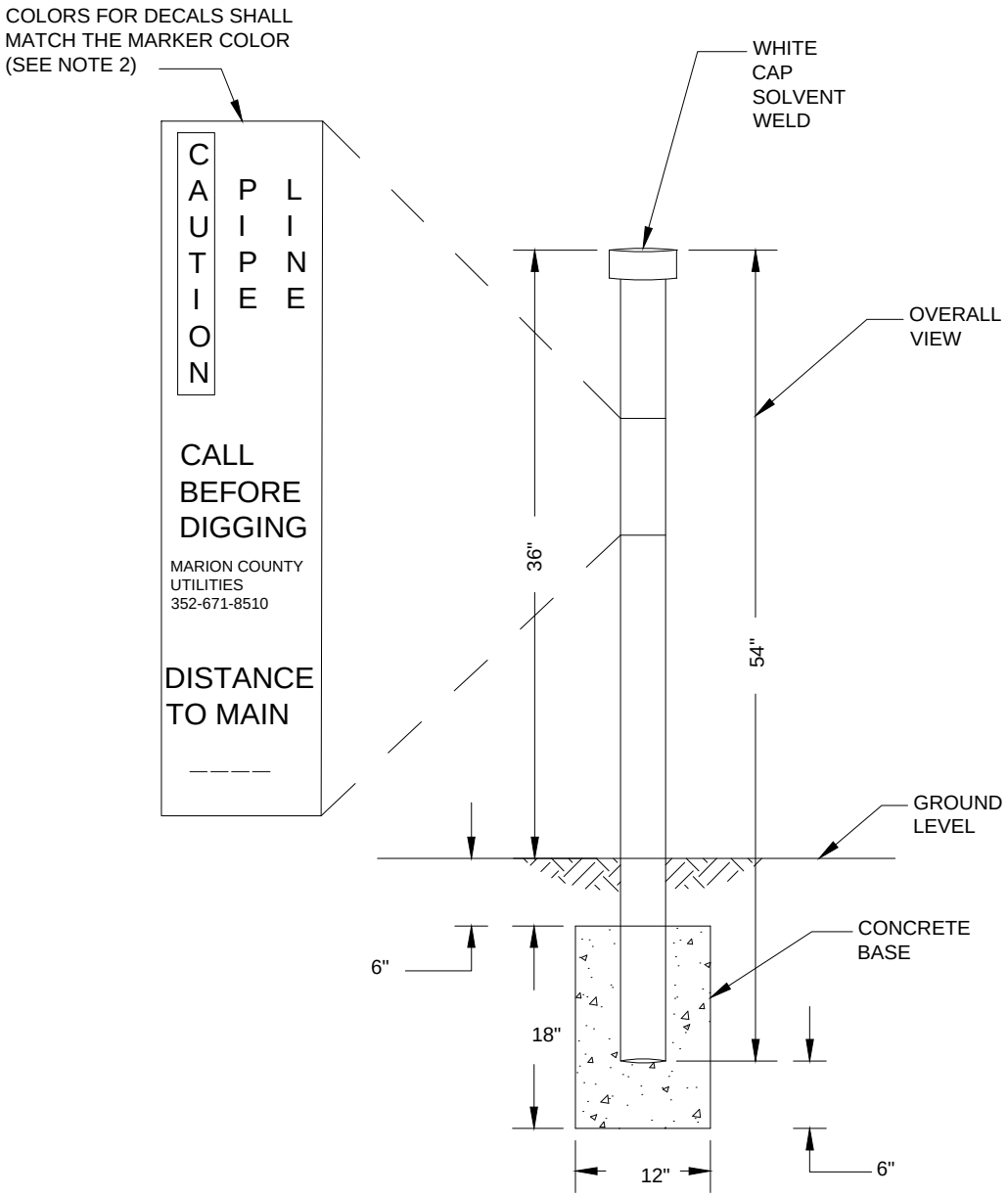

NOTES:

1. MARKERS ARE REQUIRED WHEN UTILITY MAIN IS LOCATED OVER 30 FEET FROM EDGE OF PAVEMENT OR IN AN EASEMENT NOT ADJACENT TO THE RIGHT OF WAY.
2. MARKERS SHALL BE 4" DIAMETER SCH. 80 OR DR18 PVC: BLUE FOR WATER; GREEN FOR WASTEWATER; AND PANTONE PURPLE 522C FOR RECLAIMED WATER.
3. MARKERS SHALL BE PLACED AT ALL DIRECTIONAL CHANGES AND AT ALL VALVES EXCEPT WATER VALVES NEAR FIRE HYDRANTS. ADDITIONAL MARKERS SHALL BE INSTALLED AS NEEDED SO THAT THE DISTANCE BETWEEN MARKERS DOES NOT EXCEED 1000 FEET.

Marion County FLORIDA UTILITIES	MCBCC ADOPTED XX/XX/XX	UTILITY MAIN MARKER	7
	REVISION #		UT 109

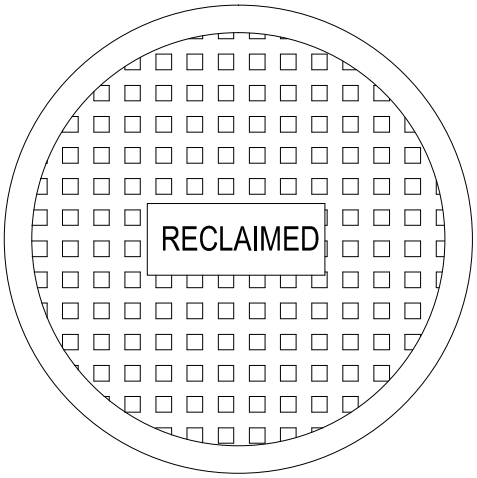

RECLAIMED WATER

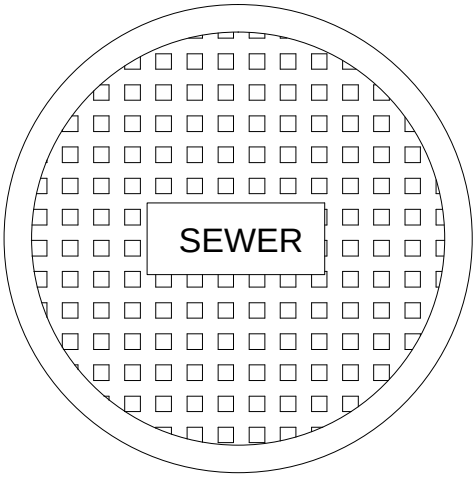

SEWER

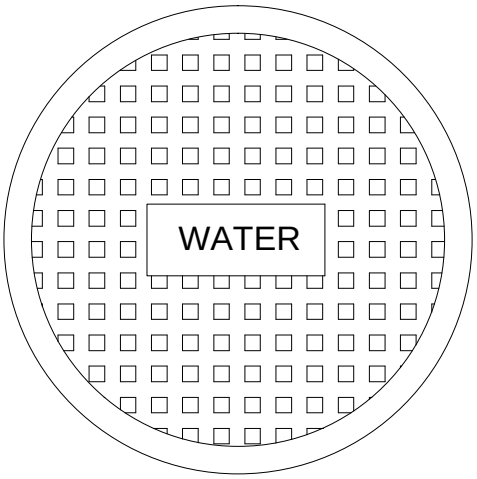

POTABLE WATER

Marion County FLORIDA UTILITIES	MCBCC ADOPTED XX/XX/XX	TYPICAL VALVE BOX COVER	7
	REVISION #		UT 110

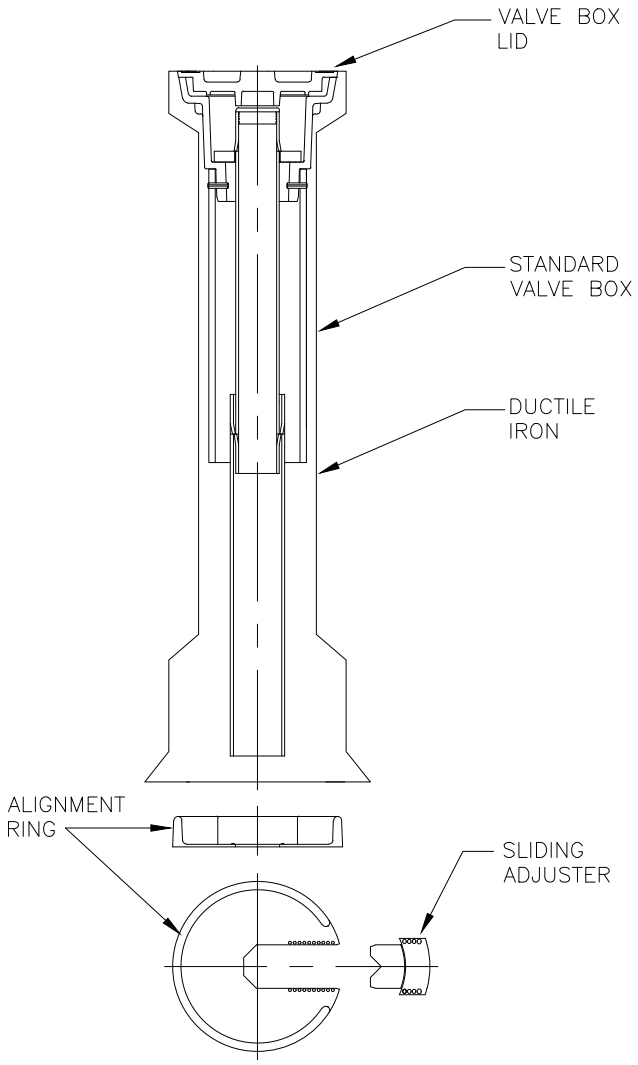

NOTES:

1. FOR ALL MAINS 6' DEEP OR GREATER.
2. PVC PIPE EXTENSIONS SHALL BE USED ON VALVE BOX INSTALLATION

Marion County FLORIDA UTILITIES	MCBCC ADOPTED XX/XX/XX	SEALED VALVE BOX, ADJUSTABLE	7
	REVISION #		UT 111

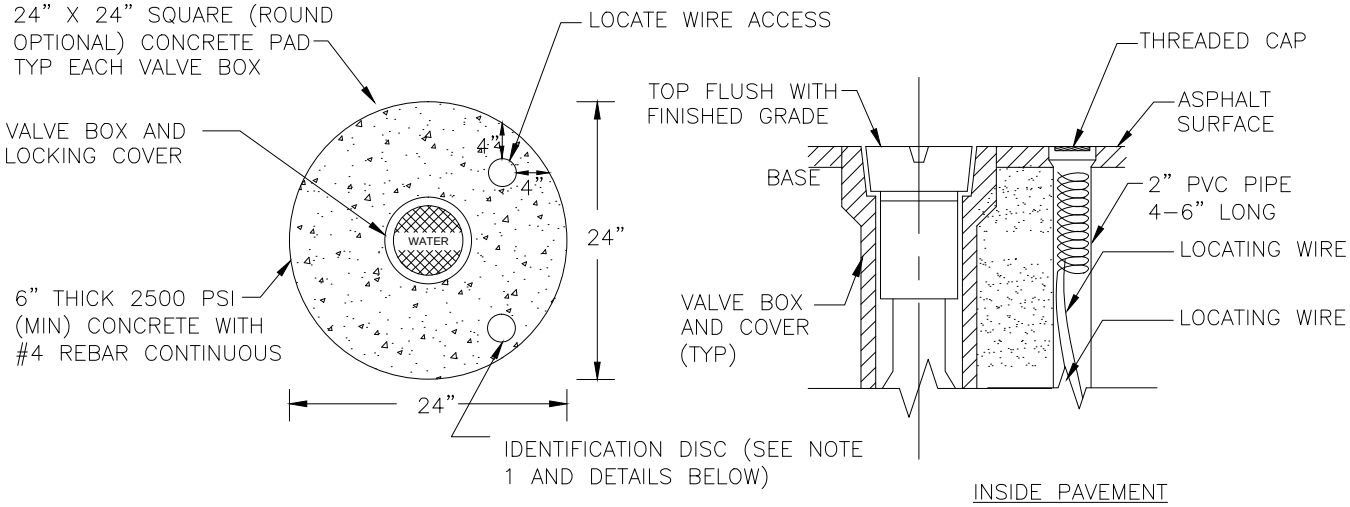

OUTSIDE PAVEMENT

INSIDE PAVEMENT

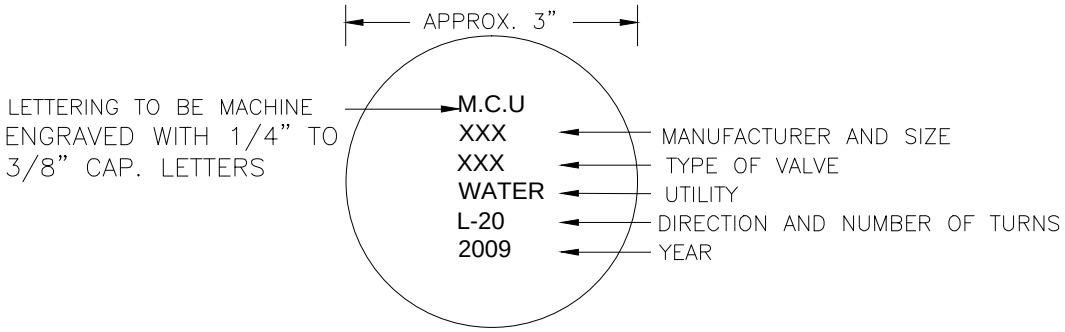

IDENTIFICATION DISC EXAMPLE

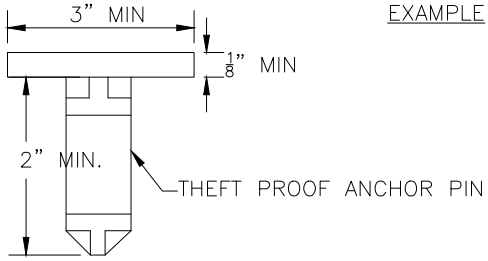

DISC TO BE EMBEDDED IN PAD

OUTSIDE PAVEMENT

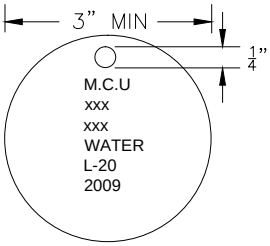

DISC TO BE HANGING IN THE BOX ANCHORED TO THE LOCATING WIRE.

INSIDE PAVEMENT

NOTES:

1. BRONZE (OR STAINLESS STEEL) IDENTIFICATION DISC SHALL BE REQUIRED FOR ALL VALVES, EXCEPT HYDRANT VALVES.

Marion County FLORIDA UTILITIES	MCBCC ADOPTED XX/XX/XX	VALVE BOX PAD	7
	REVISION #		UT 112

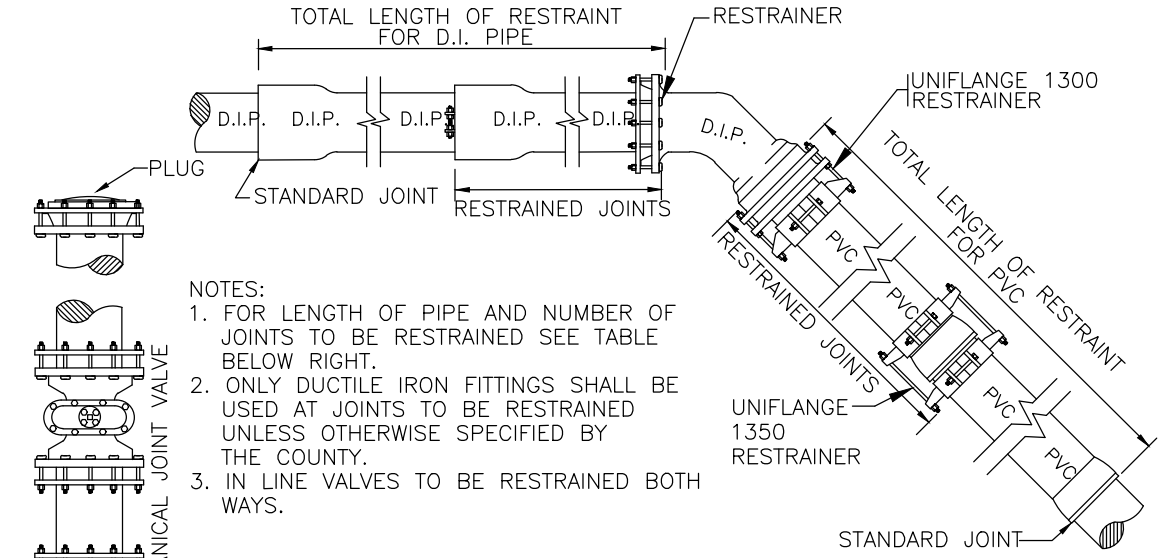

NOTES:

1. FOR LENGTH OF PIPE AND NUMBER OF JOINTS TO BE RESTRAINED SEE TABLE BELOW RIGHT.
2. ONLY DUCTILE IRON FITTINGS SHALL BE USED AT JOINTS TO BE RESTRAINED UNLESS OTHERWISE SPECIFIED BY THE COUNTY.
3. IN LINE VALVES TO BE RESTRAINED BOTH WAYS.

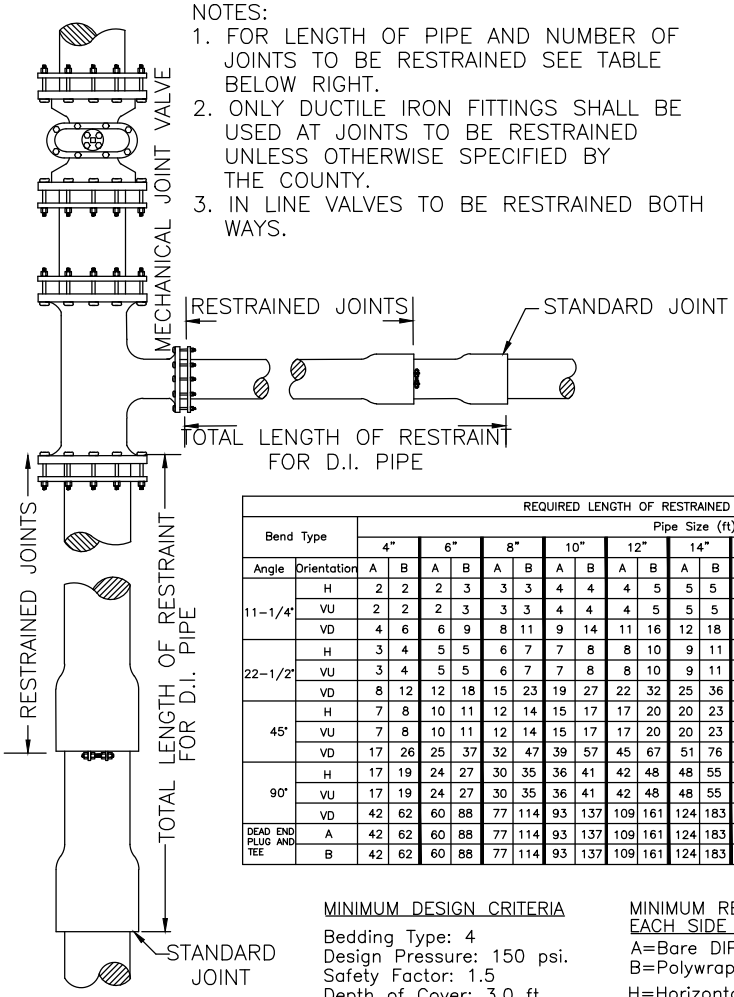

REQUIRED LENGTH OF RESTRAINED PIPE FOR WATERMAIN

Bend Type		Pipe Size (ft)																							
		4"		6"		8"		10"		12"		14"		16"		18"		20"		24"		30"		36"	
Angle	Orientation	A	B	A	B	A	B	A	B	A	B	A	B	A	B	A	B	A	B	A	B	A	B	A	B
11-1/4°	H	2	2	2	3	3	3	4	4	4	5	5	5	5	6	6	7	6	7	7	8	8	8	10'	10
	VU	2	2	2	3	3	3	4	4	4	5	5	5	5	6	6	7	6	7	7	8	8	8	10'	10
	VD	4	6	6	9	8	11	9	14	11	16	12	18	14	20	15	22	16	24	19	28	22	22	26	26
22-1/2°	H	3	4	5	5	6	7	7	8	8	10	9	11	11	12	12	13	13	14	14	17	17	17	19	19
	VU	3	4	5	5	6	7	7	8	8	10	9	11	11	12	12	13	13	14	14	17	17	17	19	19
	VD	8	12	12	18	15	23	19	27	22	32	25	36	28	41	30	45	33	49	38	57	45	45	52	52
45°	H	7	8	10	11	12	14	15	17	17	20	20	23	22	25	24	28	26	30	30	34	35	35	40	40
	VU	7	8	10	11	12	14	15	17	17	20	20	23	22	25	24	28	26	30	30	34	35	35	40	40
	VD	17	26	25	37	32	47	39	57	45	67	51	76	57	85	63	93	69	102	80	119	94	94	108	108
90°	H	17	19	24	27	30	35	36	41	42	48	48	55	53	61	58	67	63	72	73	83	85	85	97	97
	VU	17	19	24	27	30	35	36	41	42	48	48	55	53	61	58	67	63	72	73	83	85	85	97	97
	VD	42	62	60	88	77	114	93	137	109	161	124	183	138	205	153	225	166	247	192	286	228	228	261	261
DEAD END PLUG AND TEE	A	42	62	60	88	77	114	93	137	109	161	124	183	138	205	153	225	166	247	192	286	228	228	261	261
	B	42	62	60	88	77	114	93	137	109	161	124	183	138	205	153	225	166	247	192	286	228	228	261	261

MINIMUM DESIGN CRITERIA

Bedding Type: 4
Design Pressure: 150 psi.
Safety Factor: 1.5
Depth of Cover: 3.0 ft.
Soil: Sand-Silt

MINIMUM RESTRAINED LENGTH (FT) – EACH SIDE OF FITTING

A=Bare DIP
B=Polywrapped DIP or Bare PVC

H=Horizontal
VU=Vertical-Up
VD=Vertical-Down

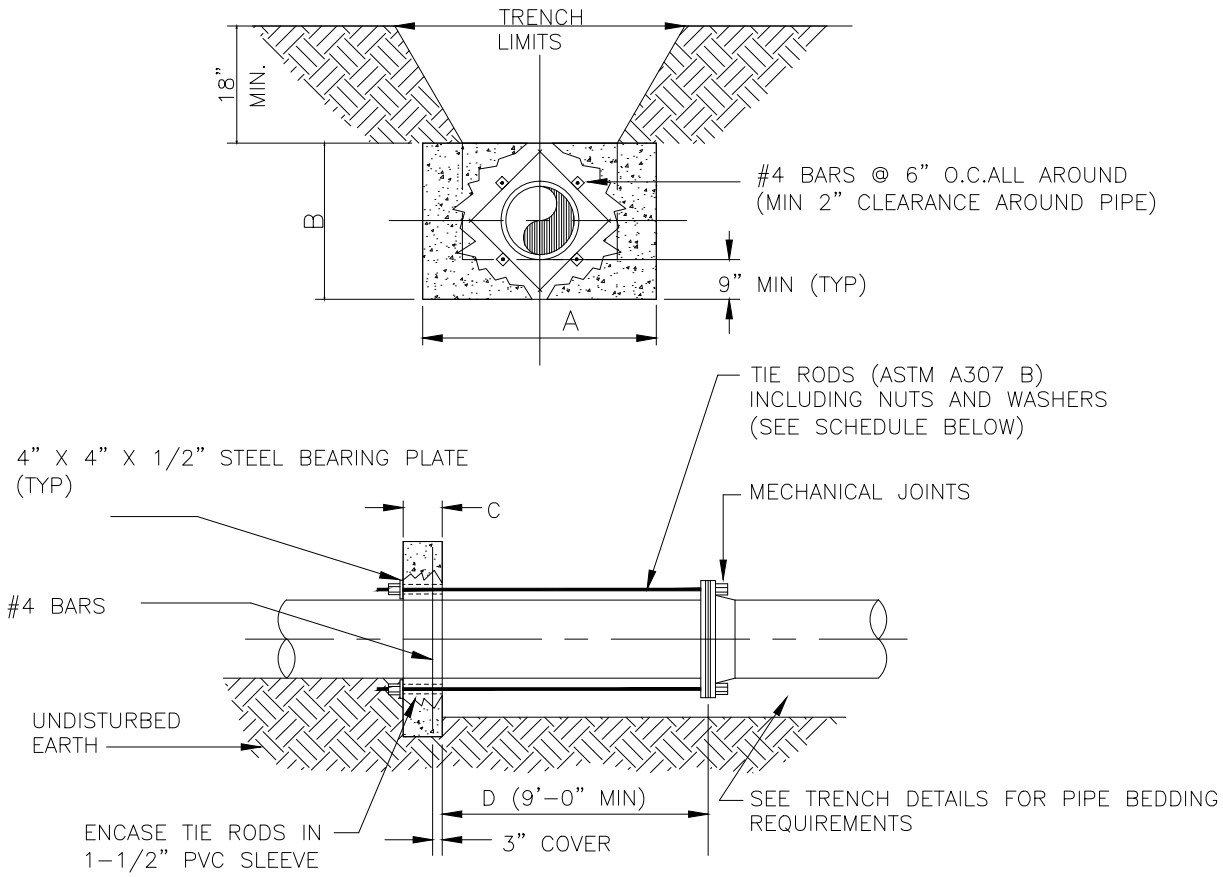

NOTES:
1. ADDITIONAL REINFORCEMENTS SHALL BE AS SPECIFIED BY THE ENGINEER.
2. MINIMUM COMPRESSIVE STRENGTH FOR CONCRETE SHALL BE 3000 PSI.
3. BEDDING, BACKFILL AND COMPACTION SHALL BE AS SPECIFIED ELSEWHERE IN THE STANDARD DRAWINGS.
4. ALL FORM BOARDS SHALL BE REMOVED PRIOR TO BACKFILL.
5. NO ALLOWANCE SHALL BE MADE FOR FRICTION BETWEEN THE PIPE WALL AND THE THRUST COLLAR.
6. DESIGN PRESSURE: 150 PSI.
7. REQUIRED FOR LINE STOPS.

SCHEDULE OF DIMENSIONS AND MATERIALS

PIPE SIZE (INCHES)	DIMENSIONS (FT.)				TIE RODS REQ'D	
	A	B	C	D	DIA.	NO.
6	2.0	2.0	1.0		3/4	2
8	2.5	2.5	1.0		3/4	2
10	3.5	3.0	1.0		3/4	4
12	5.0	3.0	1.0		3/4	4
16	6.0	4.0	1.5		3/4	4
20	8.0	5.0	1.5		3/4	6
24	9.0	6.0	1.5		3/4	8

NOTE: THRUST COLLAR AREAS TO BE COMPUTED ON BASIS OF 2000 LBS/SF SOIL RESTRAINT BEARING.

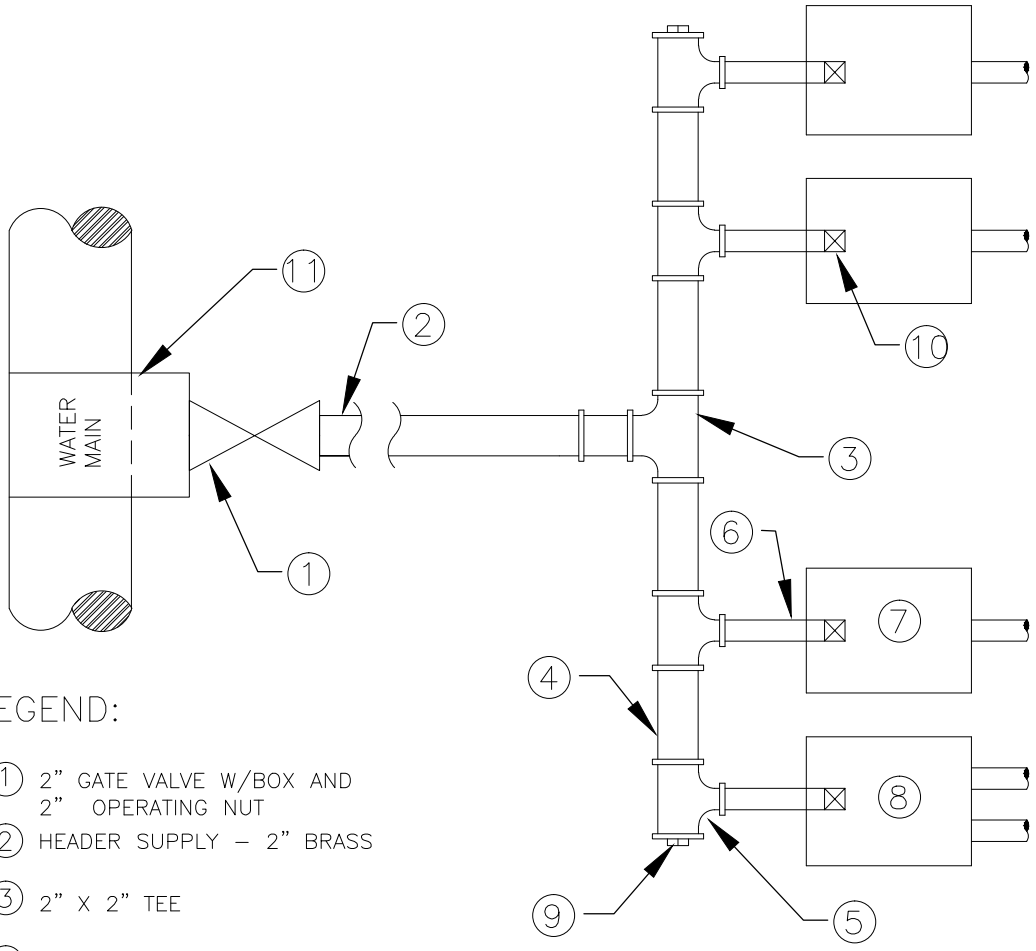

LEGEND:

1. 2" GATE VALVE W/BOX AND 2" OPERATING NUT
2. HEADER SUPPLY – 2" BRASS
3. 2" X 2" TEE
4. HEADER – 2" PIPE
5. 2" X 1" TEE
6. SERVICE PIPE 1" BRASS
7. METER BOX – SINGLE SERVICE
8. METER BOX – DOUBLE SERVICE
9. 2" BRASS PLUG
10. CURB STOP
11. 2" STAINLESS STEEL TAPPING SLEEVE

NOTES:

1. MAXIMUM OF 5 5/8" METERS
2. METERS WILL NOT BE INSTALLED IF THE METER BOXES ARE IN A DRIVING SURFACE.

Marion County FLORIDA UTILITIES	MCBCC ADOPTED XX/XX/XX	METER BANK 2" SUPPLY	7
	REVISION #		UT 202

NOTE: ALL PIPING AND APPURTENANCES TO BE 2" FOR 8" AND BELOW WATER MAINS; 4" FOR 12" WATER MAINS; 8" FOR 16" WATER MAINS; 12" FOR 24" WATER MAINS

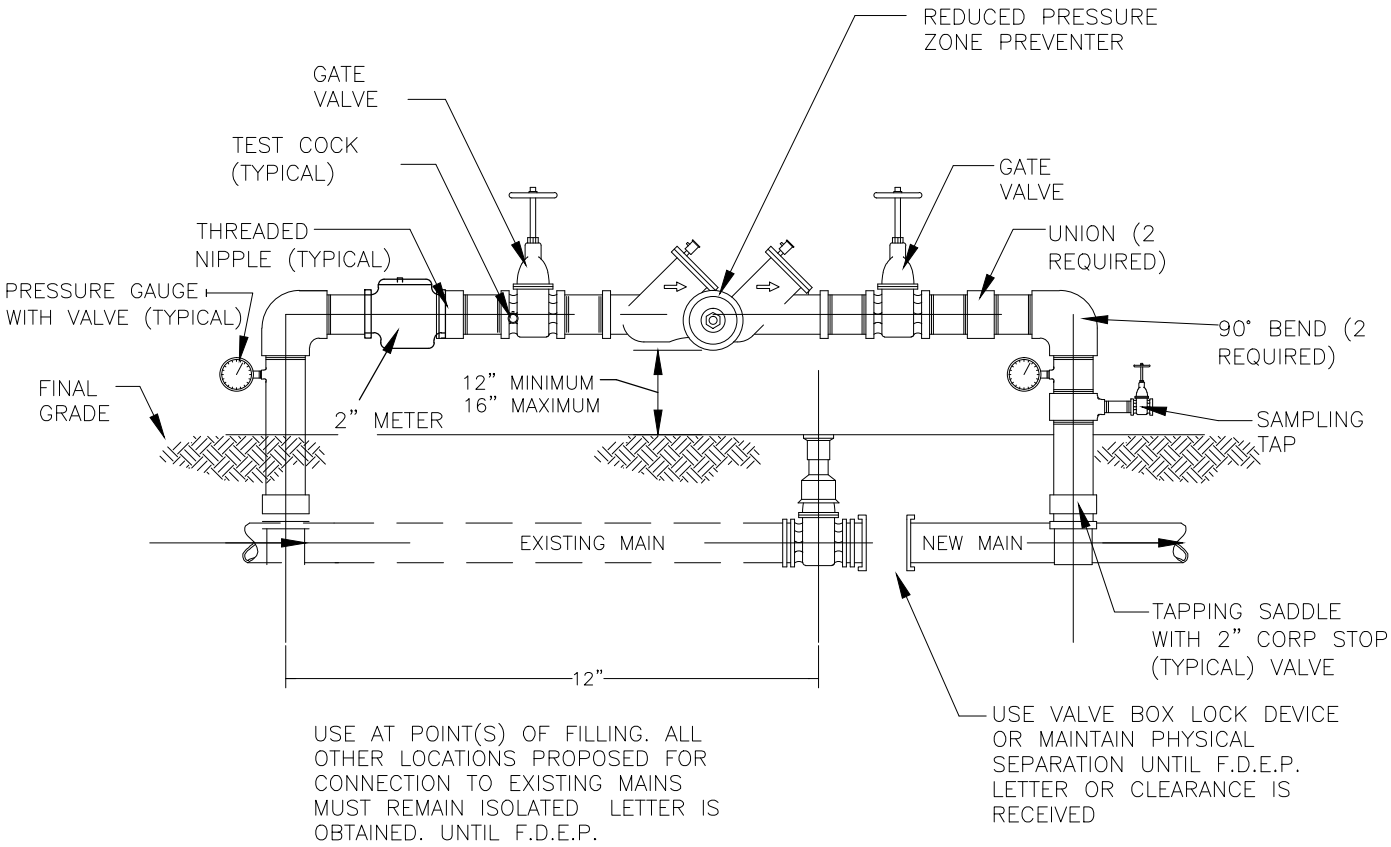

1. A TEMPORARY JUMPER CONNECTION IS REQUIRED AT ALL CONNECTIONS BETWEEN EXISTING ACTIVE WATER MAINS AND PROPOSED NEW WATER MAIN IMPROVEMENTS. TEMPORARY JUMPER WATER METERS WILL BE SUPPLIED BY MARION COUNTY UTILITIES.
2. THIS DETAIL IS TO BE USED FOR FILLING ANY NEW WATER MAIN OF ANY SIZE FOR EXISTING ACTIVE WATER MAINS AND FOR FLUSHING OF NEW MAINS, AND FOR PULLING BACTERIOLOGICAL SAMPLES FROM ANY NEW WATER MAIN OF ANY SIZE. THE JUMPER CONNECTION SHALL BE MAINTAINED UNTIL AFTER FILLING, FLUSHING, TESTING, AND DISINFECTION OF THE NEW MAIN HAS BEEN SUCCESSFULLY COMPLETED AND CLEARANCE FOR USE FROM THE FLORIDA DEPARTMENT OF ENVIRONMENTAL PROTECTION (FDEP) HAS BEEN RECEIVED. THIS JUMPER CONNECTION SHALL ALSO BE USED TO MAINTAIN A MINIMUM PRESSURE OF 20 PSI IN THE NEW MAINS ALL THE TIME AFTER DISINFECTION AND UNTIL THE FDEP CLEARANCE LETTER IS OBTAINED. ADEQUATE THRUST BLOCKING AND/OR RESTRAINTS SHALL BE PROVIDED TEMPORARILY, AS REQUIRED. PIPE AND FITTINGS USED FOR CONNECTING THE NEW PIPE TO THE EXISTING PIPE SHALL BE DISINFECTED PRIOR TO INSTALLATION IN ACCORDANCE WITH AWWA C651, LATEST EDITION.
3. THE TAPPING SLEEVE AND THE EXTERIOR OF THE MAIN TO BE TAPPED SHALL BE DISINFECTED BY SPRAYING OR SWABBING PER SECTION II OF AWWA C651–LATEST.
3. UPON RECEIPT OF CLEARANCE FOR USE FROM FDEP AND MARION COUNTY UTILITIES, THE CONTRACTOR SHALL REMOVE THE TEMPORARY JUMPER CONNECTION. THE 2" CORP VALVES ARE TO BE CLOSED AND PLUGGED WITH 2 INCH BRASS PLUGS. THE MAINS CAN NOW BE CONNECTED BY SLEEVE OR FLANGED CONNECTIONS.
4. ALL INSTALLATION AND MAINTENANCE OF THE TEMPORARY JUMPER CONNECTION AND ASSOCIATED BACK FLOW PREVENTION DEVICE, FITTINGS, VALVE, ETC., SHALL BE THE RESPONSIBILITY OF THE CONTRACTOR.
5. WATER FOR TESTING AND DISINFECTION OF THE NEW WATER MAIN AND WATER FOR MAINTENANCE OR OTHER USES SHALL BE AT THE CONTRACTOR'S EXPENSE.

Marion County FLORIDA UTILITIES	MCBCC ADOPTED XX/XX/XX	TEMPORARY JUMPER CONNECTION	7
	REVISION #		UT 203

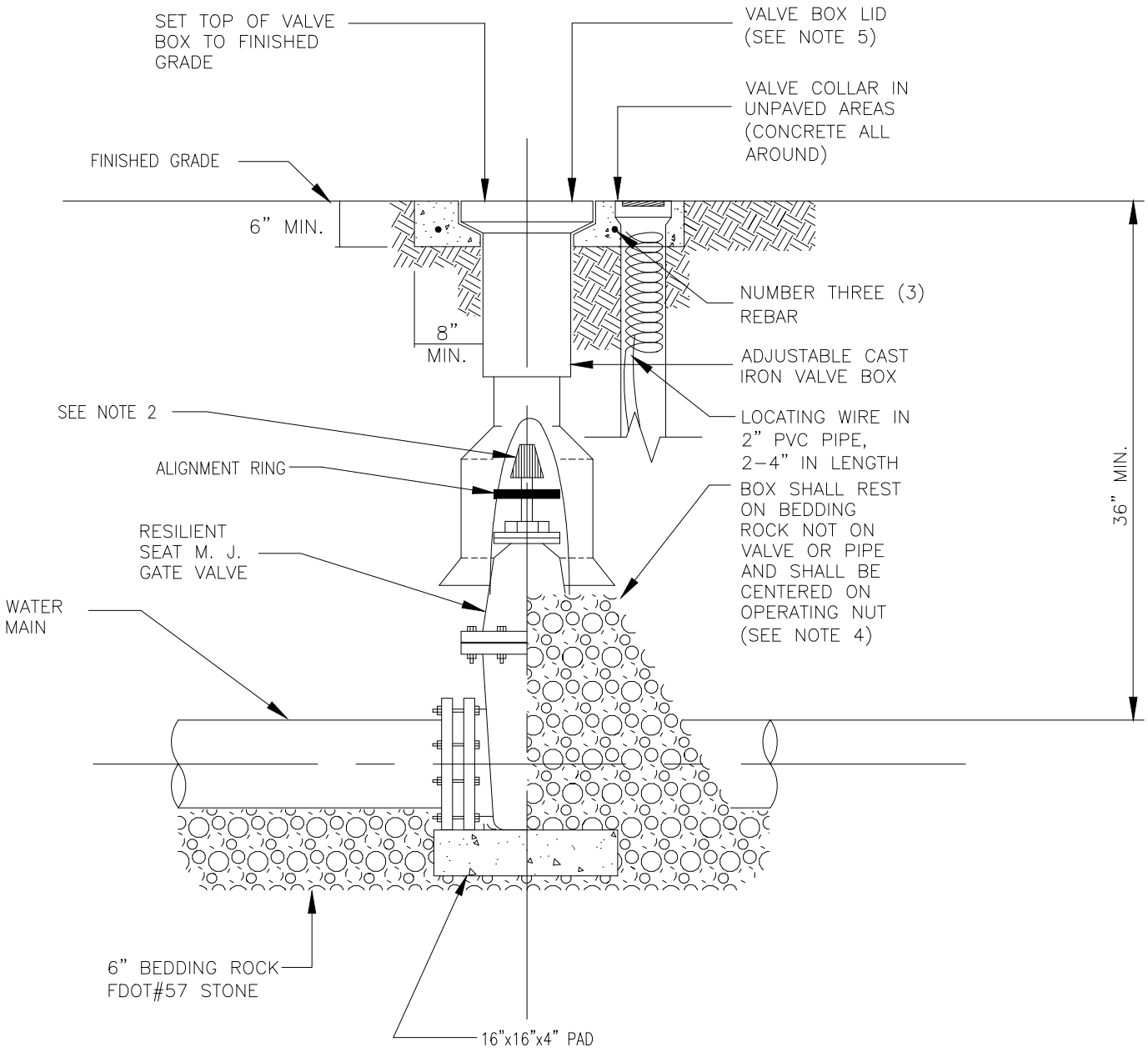

NOTES:
1. PVC EXTENSIONS SHALL NOT BE USED ON VALVE BOX INSTALLATION.
2. THE ACTUATING NUT FOR DEEPER VALVES SHALL BE EXTENDED TO COME UP TO 4 FOOT DEPTH BELOW FINISHED GRADE.
3. GATE VALVES SHALL BE USED WITH ALL WATER MAINS UP TO TWELVE (12) INCHES, BUTTERFLY VALVES SHALL BE USED FOR ALL LARGER SIZES.
4. WHEN VALVE BOX IS TO BE INSTALLED IN ROADWAY OR OTHER TRAFFIC AREAS SET VALVE BOX ON FIVE (5) SOLID COMMON BRICKS.
5. VALVE BOX LID TO BE LETTERED WITH THE WORD "WATER" OR "RECLAIMED".
6. INSTALL BRASS ID TAG IN CONCRETE.

Marion County FLORIDA UTILITIES	MCBCC ADOPTED XX/XX/XX	GATE VALVE WATER AND RECLAIMED MAINS	7
	REVISION #		UT 204

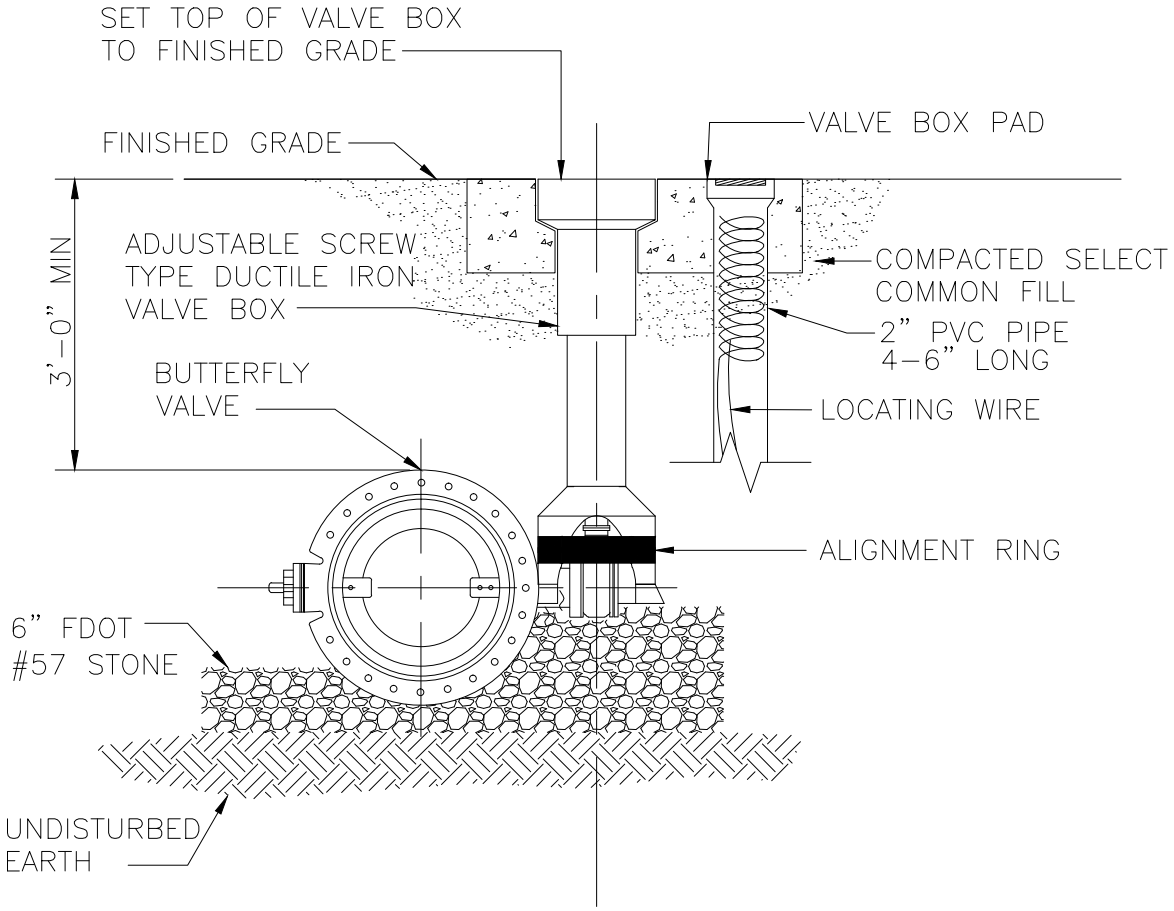

NOTES:

1. PVC PIPE EXTENSIONS SHALL NOT BE USED ON VALVE BOX INSTALLATION.
2. THE VALVE ACTUATING NUT SHALL BE EXTENDED TO BE WITHIN 3' OF FINISHED GRADE.
3. PROVIDE A PLASTIC DEBRIS SHIELD / ALIGNMENT RING WHICH INSTALLS BELOW THE VALVE ACTUATING NUT. THIS SHIELD SHALL CENTER THE RISER PIPE BOX OVER THE ACTUATING NUT AND MINIMIZE INFILTRATION.
4. LOCATING WIRE SHALL BE CONTINUOUS WITH NO SPLICES AND SHALL EXTEND 12" ABOVE TOP OF COLLAR. WIRE SHALL BE COLOR CODED TO MATCH THE UTILITY INSTALLED.
5. FOR NEW CONSTRUCTION, THE VALVE BOX SHALL BE ADJUSTED TO MIDRANGE TO ALLOW FOR FUTURE BOX ADJUSTMENTS.
6. INSTALL BRASS ID TAG IN CONCRETE.
7. VALVE BOX LID TO BE LETTERED WITH THE WORDS "WATER" OR " RECLAIMED".

Marion County FLORIDA UTILITIES	MCBCC ADOPTED XX/XX/XX	BUTTERFLY VALVE AND BOX WATER AND RECLAIMED MAINS	7
	REVISION #		UT 205

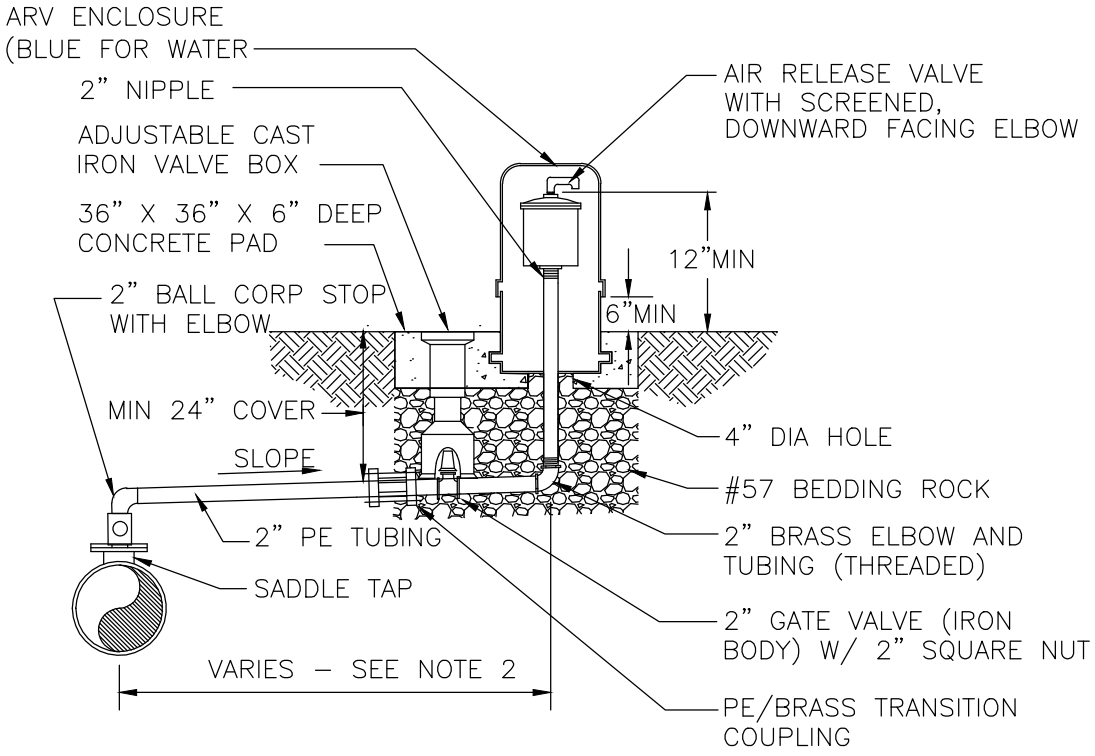

NOTES:
1. FOR POTABLE WATER USE ONLY.
2. OFFSET DISTANCE TO BE FIELD DETERMINED AND AS CLOSE TO THE R/W AS POSSIBLE.
3. ADJUST HORIZONTAL LOCATION OF SIDEWALK, AS REQUIRED TO AVOID AR ENCLOSURE.
4. LOCATE ARV ENCLOSURE WITHIN 6" OF R/W.

Marion County FLORIDA UTILITIES	MCBCC ADOPTED XX/XX/XX	AIR RELEASE VALVE POTABLE WATER	7
	REVISION #		UT 206

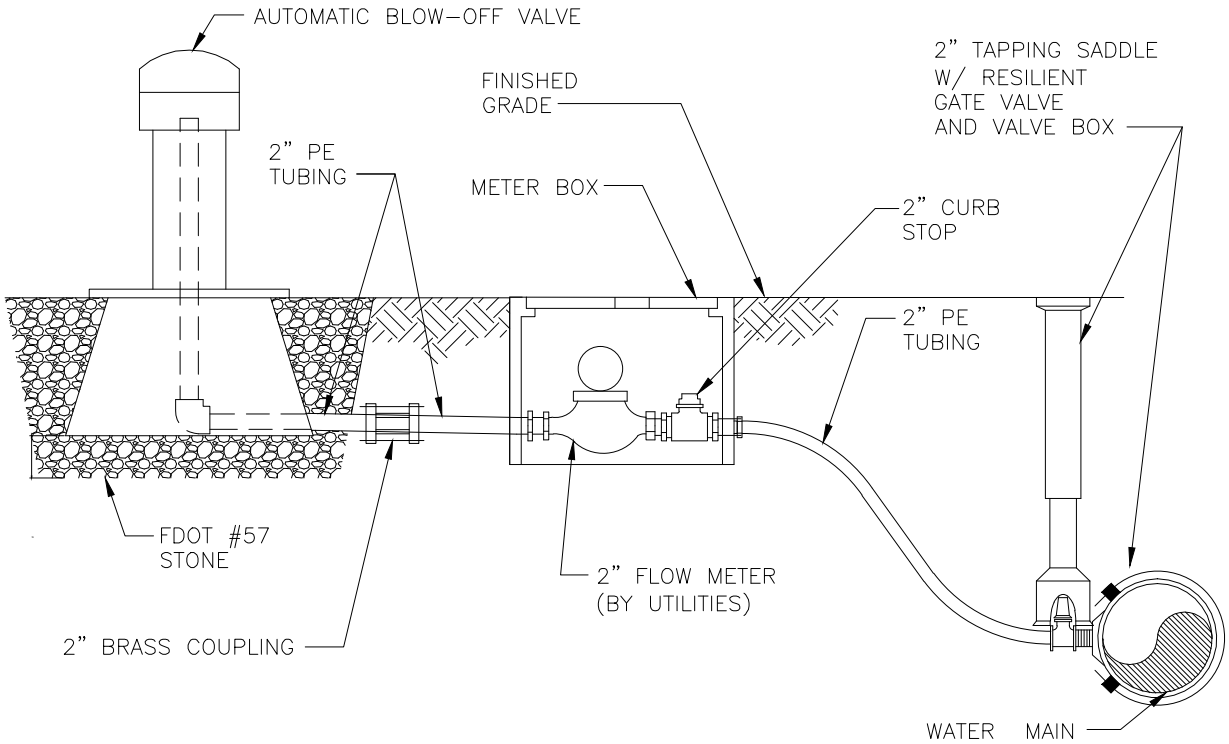

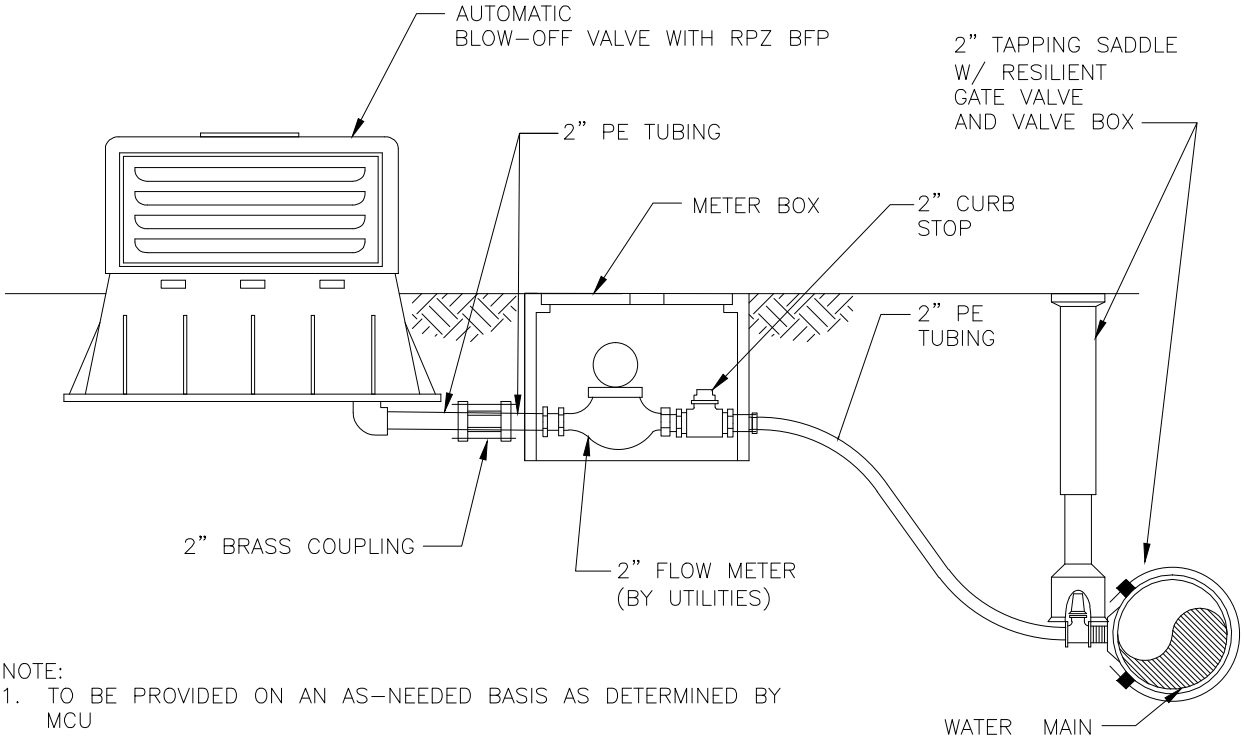

NOTE:
1. TO BE PROVIDED ON AN AS-NEEDED BASIS AS DETERMINED BY MCU

Marion County FLORIDA UTILITIES	MCBCC ADOPTED XX/XX/XX	AUTOMATIC BLOW OFF VALVE WATER MAIN	7
	REVISION #		UT 207

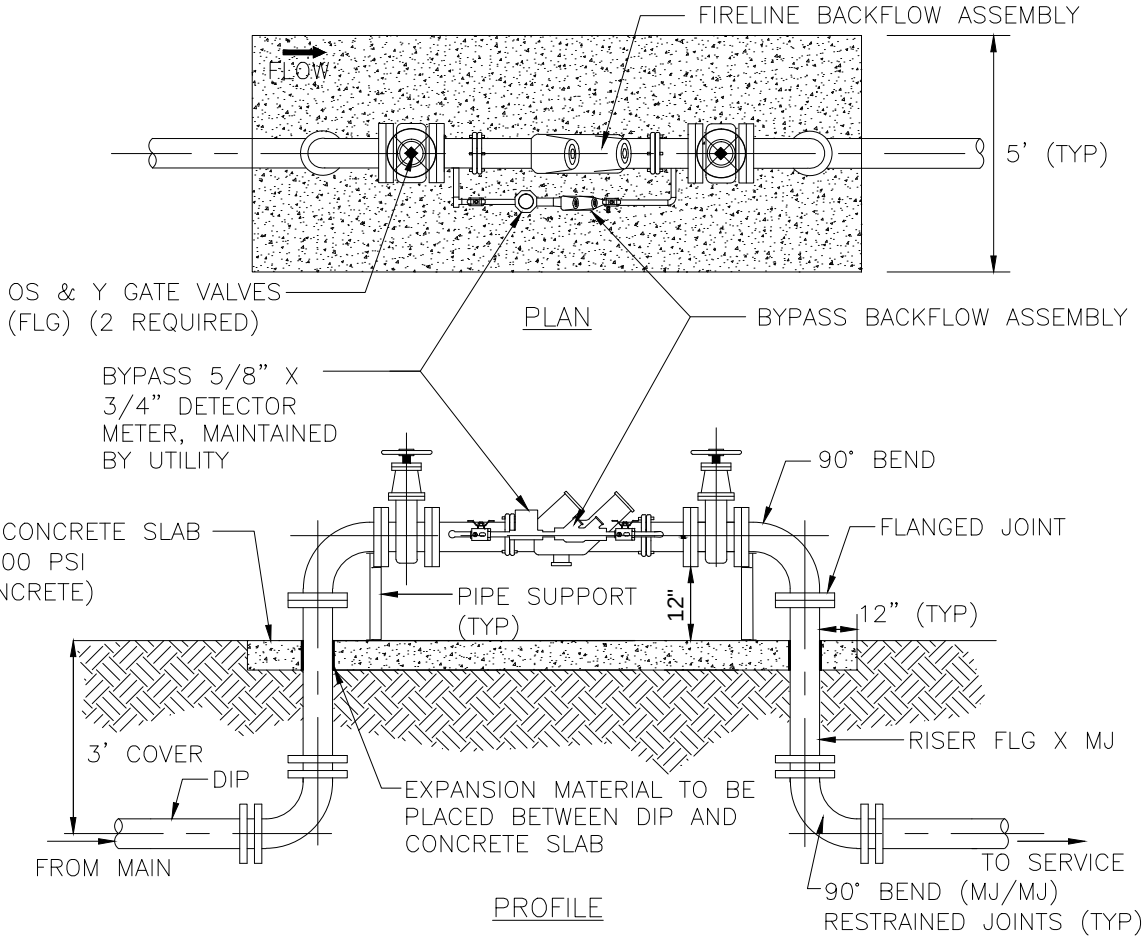

NOTES:

1. REQUIRED FOR SITES WITH SEPARATE DOMESTIC AND FIRE SYSTEM SUPPLY PIPING.
2. BACKFLOW ASSEMBLY SHALL BE OWNED AND MAINTAINED BY THE PROPERTY OWNER. UTILITIES SHALL OWN AND MAINTAIN THE METER.
3. UTILITY EASEMENT REQUIRED FOR BY-PASS METER READING. MINIMUM EASEMENT SIZE IS 10 FEET BY 15 FEET.
4. DETAIL NOT APPLICABLE WHEN AN RPZ IS REQUIRED IN ACCORDANCE WITH THE BACKFLOW PREVENTION MANUAL.
5. SERVICES 4-INCH AND LARGER SHALL BE DIP FROM THE POINT OF CONNECTION AT THE MAIN TO THE METER ASSEMBLY IF THE MAIN IS ON THE SAME SIDE OF THE STREET AS THE ASSEMBLY. IF THE MAIN IS ON THE OPPOSITE SIDE OF THE STREET AS THE ASSEMBLY, A MINIMUM OF ONE SEGMENT OF PIPE IMMEDIATELY UPSTREAM FROM THE METER ASSEMBLY SHALL BE DIP.
6. ALL FLANGES: PIPE, VALVES AND APPURTENANCES SHALL HAVE 316 S.S. HARDWARE.

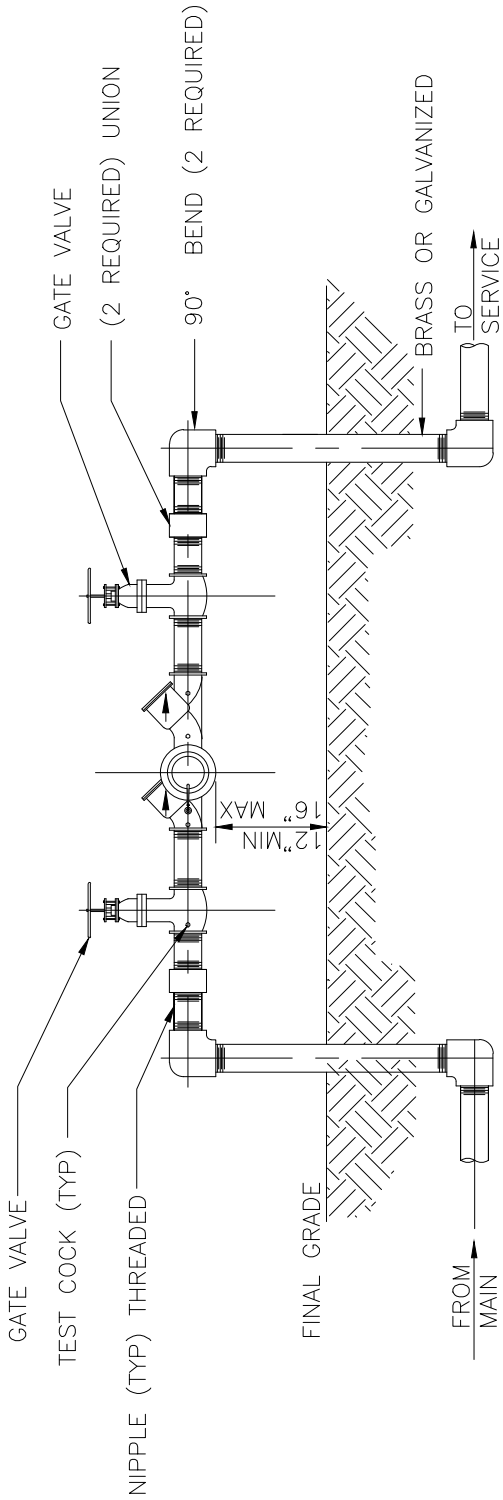

NOTES:
1. RPZ SHALL BE MAINTAINED AS PER MARION COUNTY CROSS CONNECTION CONTROL ORDINANCE
2. PIPES LARGER THAN 4" SHALL BE DUCTILE IRON

Marion County FLORIDA UTILITIES	MCBCC ADOPTED XX/XX/XX	REDUCED PRESSURE BACKFLOW PREVENTER	7
	REVISION #		UT 209

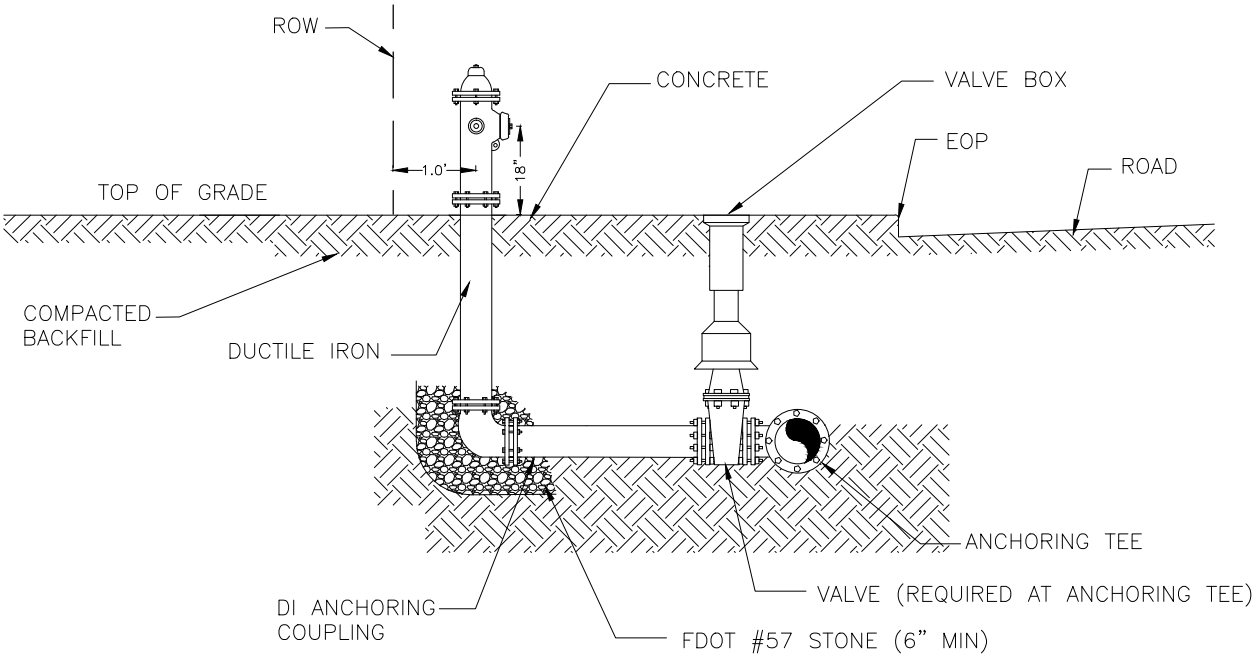

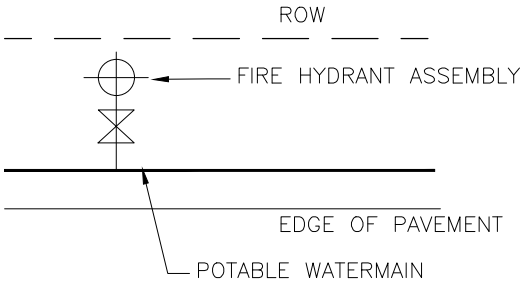

STANDARD CONFIGURATION

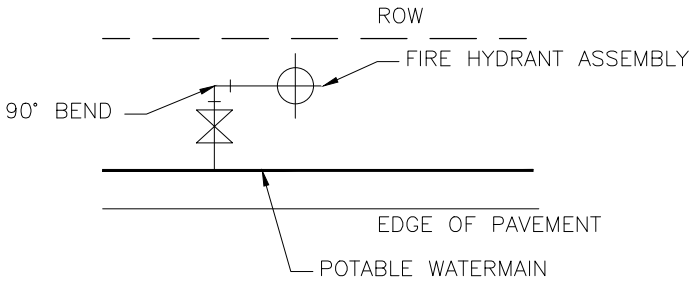

ALTERNATE CONFIGURATION

NOTES:
1. BONNET COLORS: TO BE DETERMINED BY FLOW TEST.
2. HYDRANT SHALL BE 1' INSIDE OF ROW, WHEN POSSIBLE

Marion County FLORIDA UTILITIES	MCBCC ADOPTED XX/XX/XX	FIRE HYDRANT ASSEMBLY	7
	REVISION #		UT 210

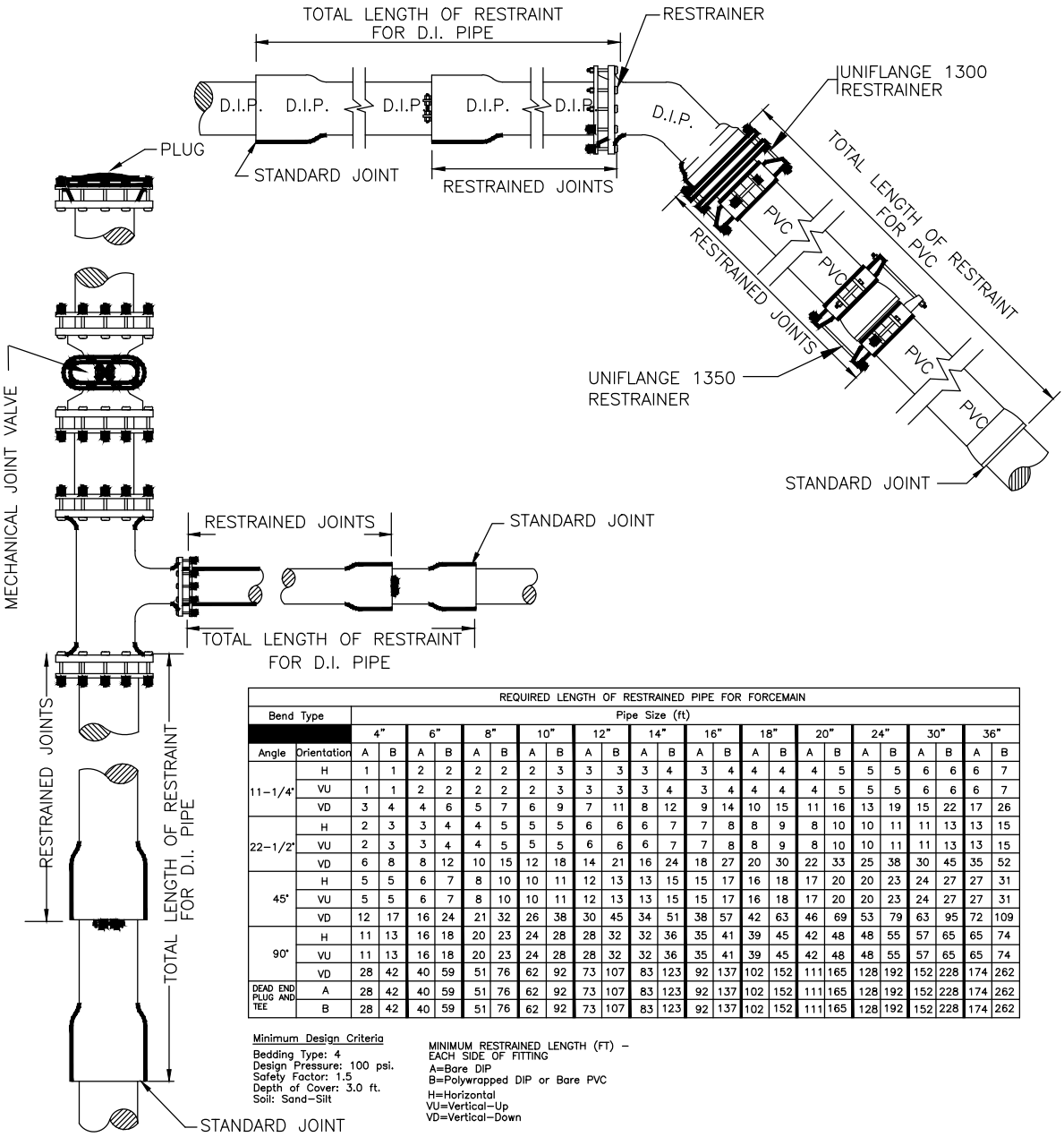

REQUIRED LENGTH OF RESTRAINED PIPE FOR FORCEMAIN

Bend Type		Pipe Size (ft)																							
		4"		6"		8"		10"		12"		14"		16"		18"		20"		24"		30"		36"	
Angle	Orientation	A	B	A	B	A	B	A	B	A	B	A	B	A	B	A	B	A	B	A	B	A	B	A	B
11-1/4°	H	1	1	2	2	2	2	2	3	3	3	3	4	3	4	4	4	4	5	5	5	6	6	6	7
	VU	1	1	2	2	2	2	2	3	3	3	3	4	3	4	4	4	4	5	5	5	6	6	6	7
	VD	3	4	4	6	5	7	6	9	7	11	8	12	9	14	10	15	11	16	13	19	15	22	17	26
22-1/2°	H	2	3	3	4	4	5	5	5	6	6	6	7	7	8	8	9	8	10	10	11	11	13	13	15
	VU	2	3	3	4	4	5	5	5	6	6	6	7	7	8	8	9	8	10	10	11	11	13	13	15
	VD	6	8	8	12	10	15	12	18	14	21	16	24	18	27	20	30	22	33	25	38	30	45	35	52
45°	H	5	5	6	7	8	10	10	11	12	13	13	15	15	17	16	18	17	20	20	23	24	27	27	31
	VU	5	5	6	7	8	10	10	11	12	13	13	15	15	17	16	18	17	20	20	23	24	27	27	31
	VD	12	17	16	24	21	32	26	38	30	45	34	51	38	57	42	63	46	69	53	79	63	95	72	109
90°	H	11	13	16	18	20	23	24	28	28	32	32	36	35	41	39	45	42	48	48	55	57	65	65	74
	VU	11	13	16	18	20	23	24	28	28	32	32	36	35	41	39	45	42	48	48	55	57	65	65	74
	VD	28	42	40	59	51	76	62	92	73	107	83	123	92	137	102	152	111	165	128	192	152	228	174	262
DEAD END PLUG AND TEE	A	28	42	40	59	51	76	62	92	73	107	83	123	92	137	102	152	111	165	128	192	152	228	174	262
	B	28	42	40	59	51	76	62	92	73	107	83	123	92	137	102	152	111	165	128	192	152	228	174	262

Minimum Design Criteria

Bedding Type: 4
Design Pressure: 100 psi.
Safety Factor: 1.5
Depth of Cover: 3.0 ft.
Soil: Sand-Silt

MINIMUM RESTRAINED LENGTH (FT) - EACH SIDE OF FITTING
A=Bare DIP
B=Polywrapped DIP or Bare PVC

H=Horizontal
VU=Vertical-Up
VD=Vertical-Down

NOTES:

1. FITTINGS SHALL HAVE RESTRAINED JOINTS UNLESS OTHERWISE INDICATED.
2. INSTALL FULL LENGTH JOINTS WITH TOTAL LENGTH EQUAL TO OR GREATER THAN LENGTH SHOWN IN THE TABLE.
3. WHERE TWO OR MORE FITTINGS ARE IN SERIES, SELECT FITTING RESTRAINT LENGTH THAT YIELDS THE LONGEST RESTRAINT DISTANCE.
4. ALL INLINE VALVES SHALL BE RESTRAINED HALF DISTANCE OF DEAD END EACH WAY.
5. WHERE INTERNAL RESTRAINED JOINTS ARE USED, THE ENTIRE BELL SHALL BE PAINTED RED.
6. LENGTHS SHOWN IN THE TABLE WERE CALCULATED IN ACCORDANCE WITH PROCEDURES OUTLINED IN "THRUST RESTRAINT DESIGN FOR DUCTILE IRON PIPE" GUIDELINES PUBLISHED BY DIPRA, USING THE ASSUMPTIONS SHOWN BELOW.
7. THE DESIGN ENGINEER SHALL INCREASE THE VALUES IN THE TABLE AS WARRANTED BY SITE-SPECIFIC PARAMETERS, SUCH AS SOIL DESIGNATIONS AND LAYING CONDITIONS.
8. FOR LENGTH OF PIPE AND NUMBER OF JOINTS TO BE RESTRAINED SEE TABLE BELOW RIGHT.
9. ONLY DUCTILE IRON FITTINGS SHALL BE USED AT JOINTS TO BE RESTRAINED UNLESS OTHERWISE SPECIFIED BY THE COUNTY.

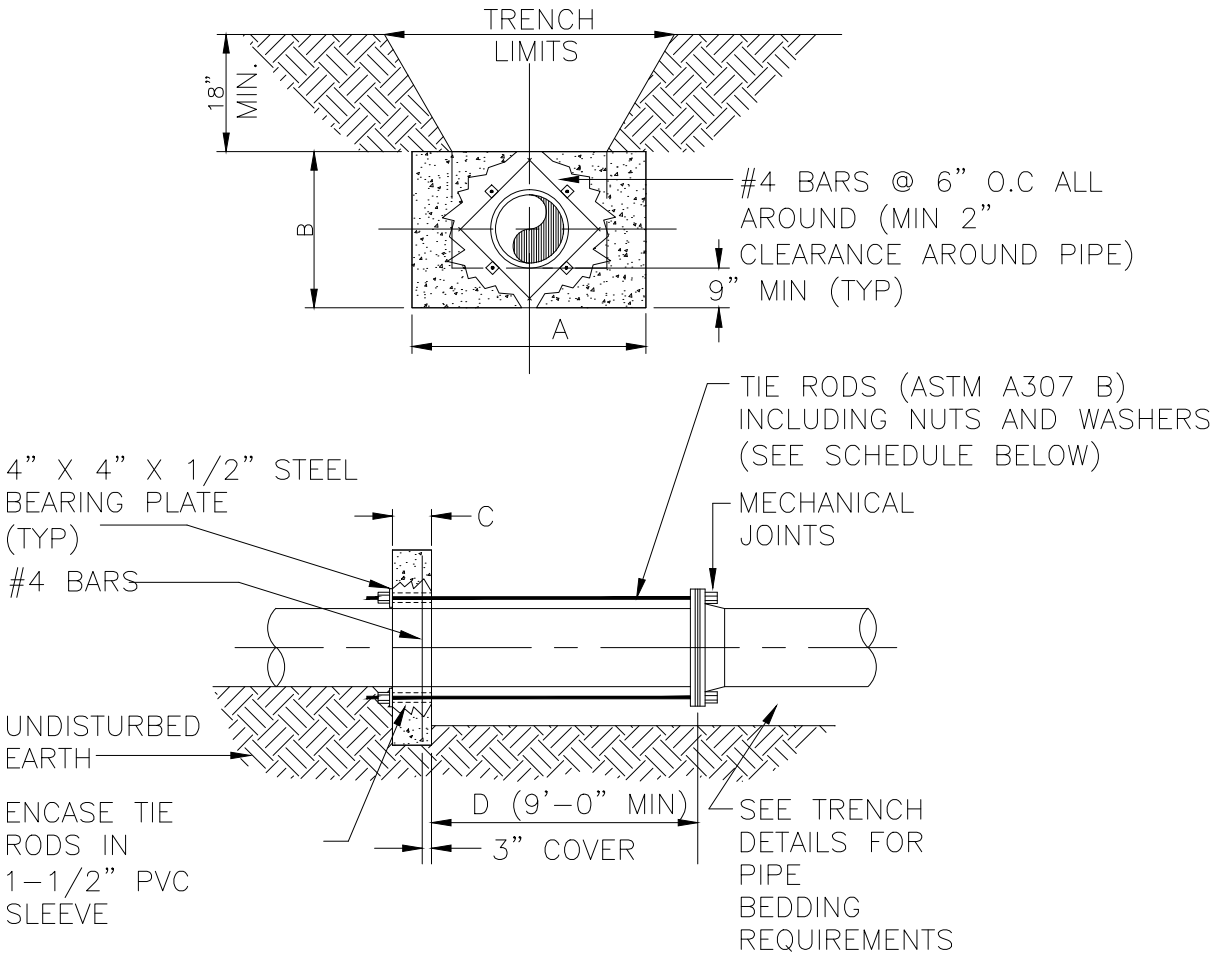

NOTES:

1. ADDITIONAL REINFORCEMENTS SHALL BE AS SPECIFIED BY THE ENGINEER.
2. MINIMUM COMPRESSIVE STRENGTH FOR CONCRETE SHALL BE 3000 PSI.
3. BEDDING, BACKFILL, AND COMPACTION SHALL BE AS SPECIFIED ELSEWHERE IN THE STANDARD DRAWINGS.
4. ALL FORM BOARDS SHALL BE REMOVED PRIOR TO BACKFILL.
5. NO ALLOWANCE SHALL BE MADE FOR FRICTION BETWEEN THE PIPE WALL AND THE THRUST COLLAR.
6. DESIGN PRESSURE:____100 PSI.
7. REQUIRED FOR LINE STOPS.

SCHEDULE OF DIMENSIONS AND MATERIALS

PIPE SIZE (INCHES)	DIMENSIONS (FT.)				TIE RODS REQ'D	
	A	B	C	D	DIA.	NO.
6	2.0	2.0	1.0		3/4	2
8	2.5	2.5	1.0		3/4	2
10	3.0	2.5	1.0		3/4	4
12	4.0	3.0	1.0		3/4	4
16	5.5	3.5	1.5		3/4	4
20	7.5	4.0	1.5		3/4	4
24	8.5	5.0	1.5		3/4	6

NOTE: THRUST COLLAR AREAS TO BE COMPUTED ON BASIS OF 2000 LBS/SF SOIL RESTRAINT BEARING.

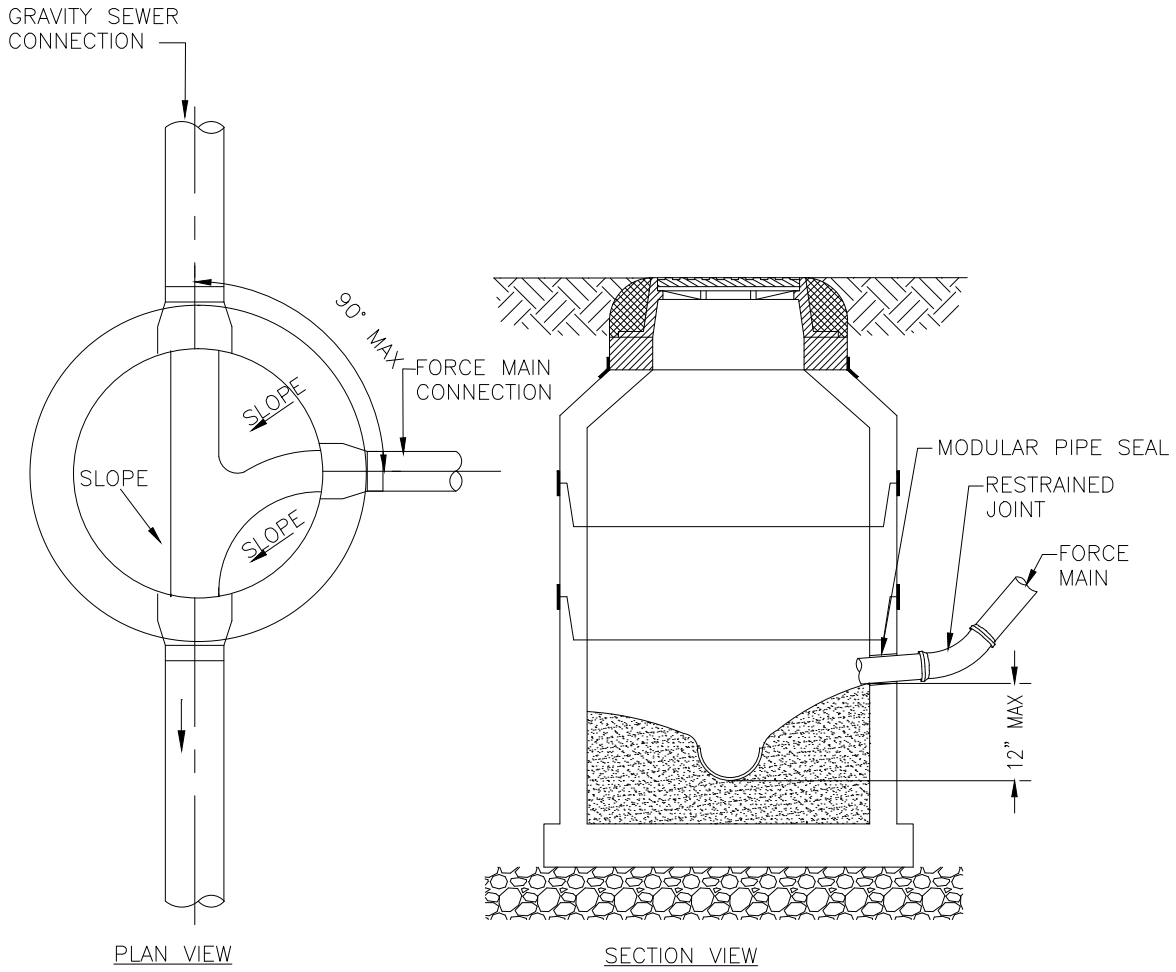

NOTES:

1. FORCE MAIN ORIENTED TO FACILITATE FLOW AND SHALL ENTER MANHOLE WITHIN 1' ABOVE INVERT OF THE EFFLUENT PIPE.
2. BENCH AS REQUIRED FOR NEW FORCE MAIN.
3. MANHOLE RECEIVING FORCE MAIN AND NEXT MANHOLE SHALL BE LINED PER MARION COUNTY LAND DEVELOPMENT CODE. FOR CONNECTIONS TO EXISTING MANHOLES, MANHOLE RECEIVING FORCE MAIN AND NEXT MANHOLE SHALL BE COATED OR LINED PER MARION COUNTY LAND DEVELOPMENT CODE.
4. CONTRACTOR TO COORDINATE THE PRESENCE OF UTILITIES INSPECTOR DURING CORING AND CONNECTIONS TO EXISTING MANHOLES.

Marion County FLORIDA UTILITIES	MCBCC ADOPTED XX/XX/XX	FORCE MAIN TO GRAVITY SEWER CONNECTION	7
	REVISION #		UT 302

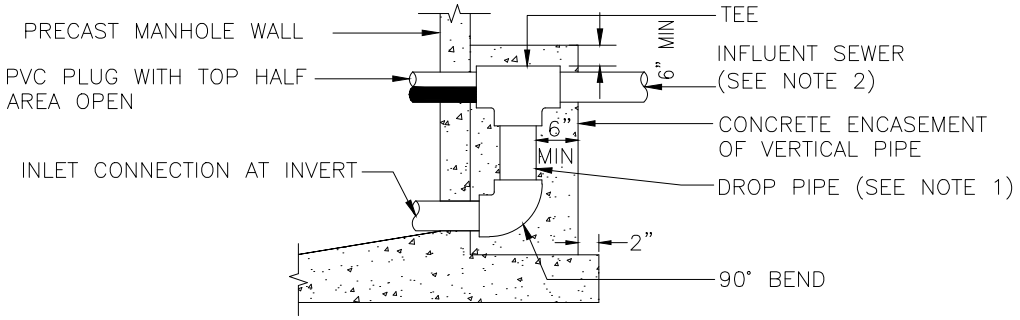

GRAVITY OUTSIDE DROP CONNECTION (NEW MANHOLE)

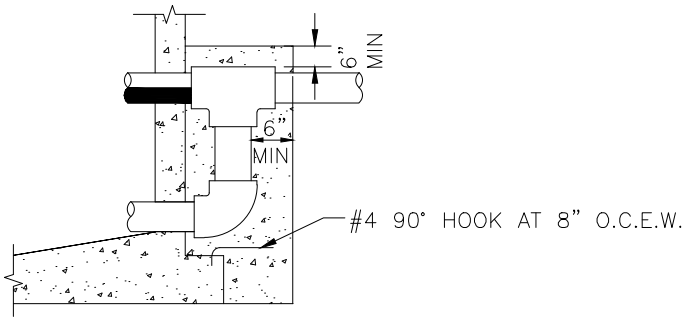

GRAVITY OUTSIDE DROP CONNECTION (EXISTING MANHOLE)

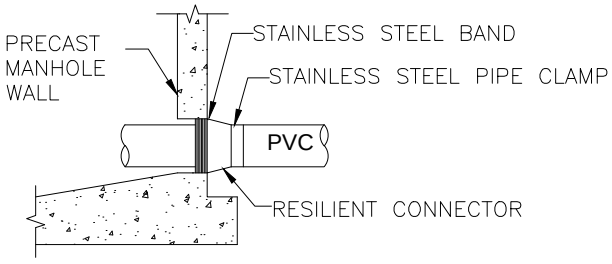

NEW AND EXISTING MANHOLES

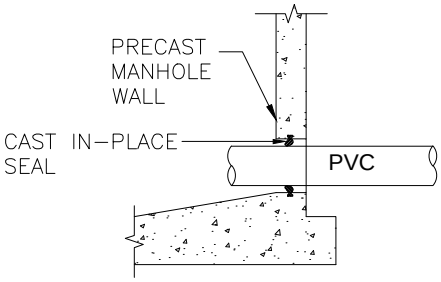

NEW MANHOLES ONLY

STANDARD CONNECTION

NOTES:
1. DROP PIPE AND FITTINGS SHALL BE OF EQUAL SIZE AND MATERIAL AS THE INFLUENT SEWER.
2. AN OUTSIDE DROP CONNECTION SHALL BE REQUIRED FOR ALL INFLUENT LINES WHICH HAVE AN INVERT 2' OR MORE ABOVE THE MANHOLE INVERT.
3. CONTRACTOR TO COORDINATE THE PRESENCE OF UTILITIES INSPECTOR DURING CORING AND CONNECTIONS TO EXISTING MANHOLES.

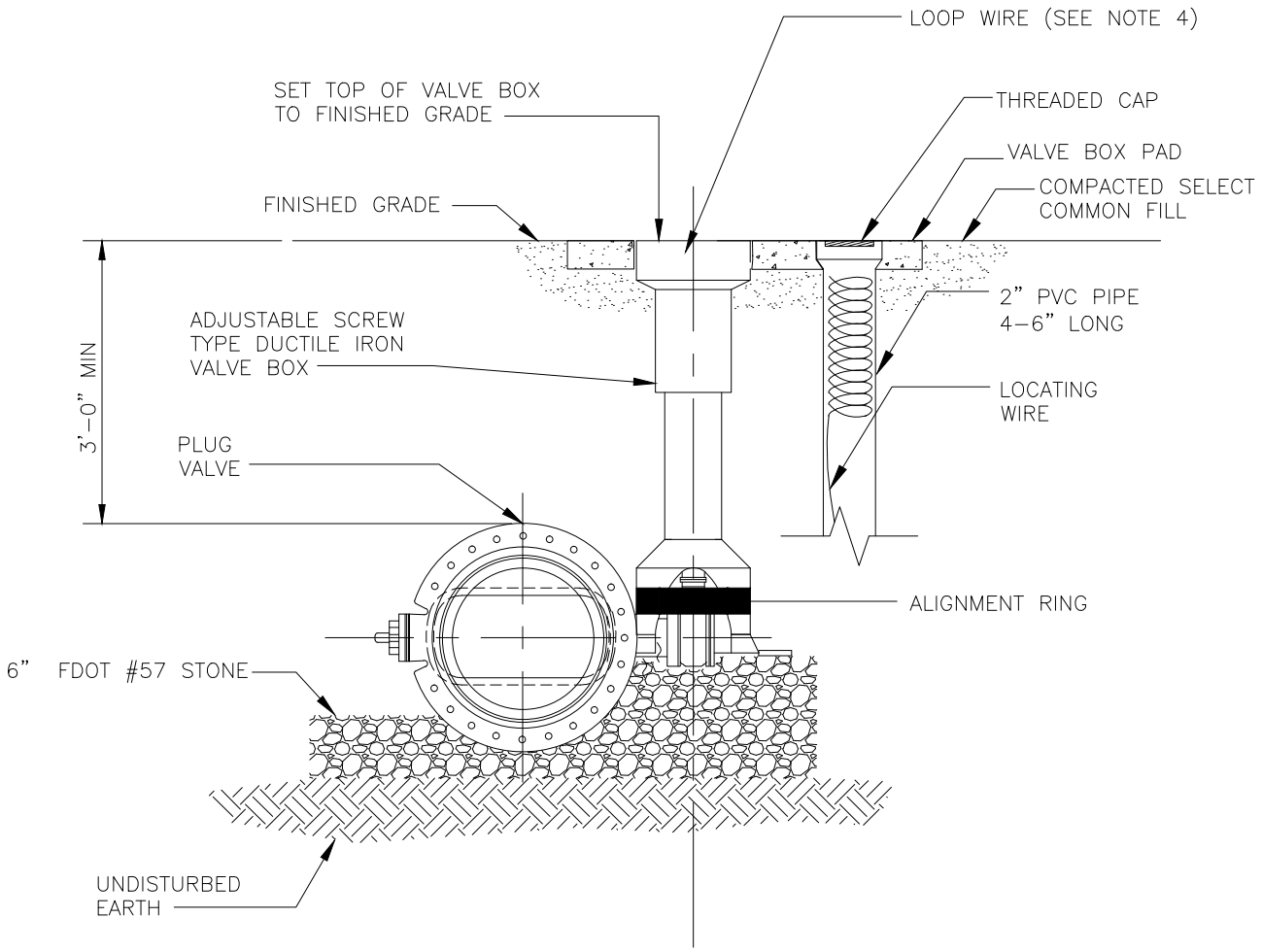

NOTES:

1. PVC PIPE EXTENSIONS SHALL BE USED ON VALVE BOX INSTALLATION.
2. THE VALVE ACTUATING NUT SHALL BE EXTENDED TO BE WITHIN 3' OF FINISHED GRADE.
3. PROVIDE A PLASTIC DEBRIS SHIELD / ALIGNMENT RING WHICH INSTALLS BELOW THE VALVE ACTUATING NUT. THIS SHIELD SHALL CENTER THE RISER PIPE BOX OVER THE ACTUATING NUT AND MINIMIZE INFILTRATION.
4. LOCATING WIRE SHALL BE CONTINUOUS WITH NO SPLICES AND SHALL EXTEND 12" ABOVE TOP OF COLLAR. WIRE SHALL BE COLOR CODED TO MATCH THE UTILITY INSTALLED.
5. FOR NEW CONSTRUCTION, THE VALVE BOX SHALL BE ADJUSTED TO MIDRANGE TO ALLOW FOR FUTURE
6. BOX ADJUSTMENTS.
7. REFER TO FIGURE A111 FOR INSTALLATIONS AT A DEPTH OF 6' OR GREATER.

Marion County FLORIDA UTILITIES	MCBCC ADOPTED XX/XX/XX	PLUG VALVE AND BOX	7
	REVISION #		UT 304

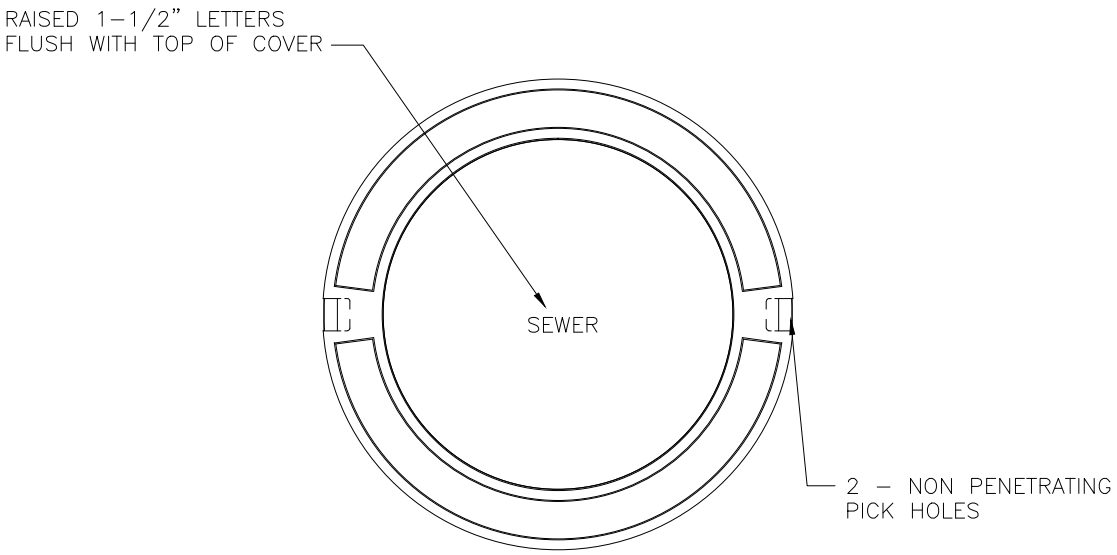

PLAN

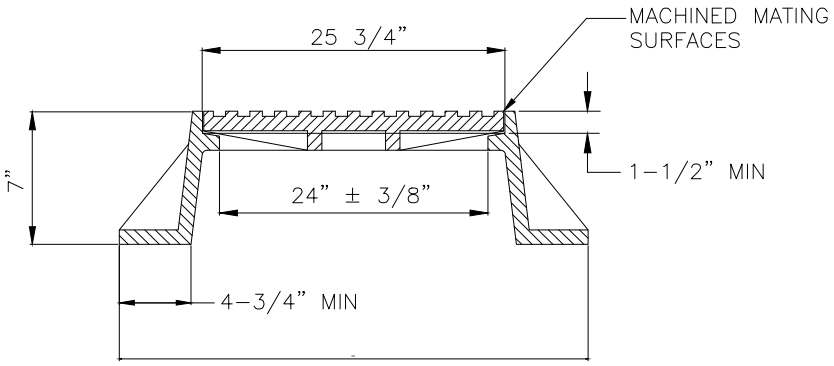

ELEVATION

Marion County FLORIDA UTILITIES	MCBCC ADOPTED XX/XX/XX	STANDARD MANHOLE FRAME AND COVER	7
	REVISION #		UT 305

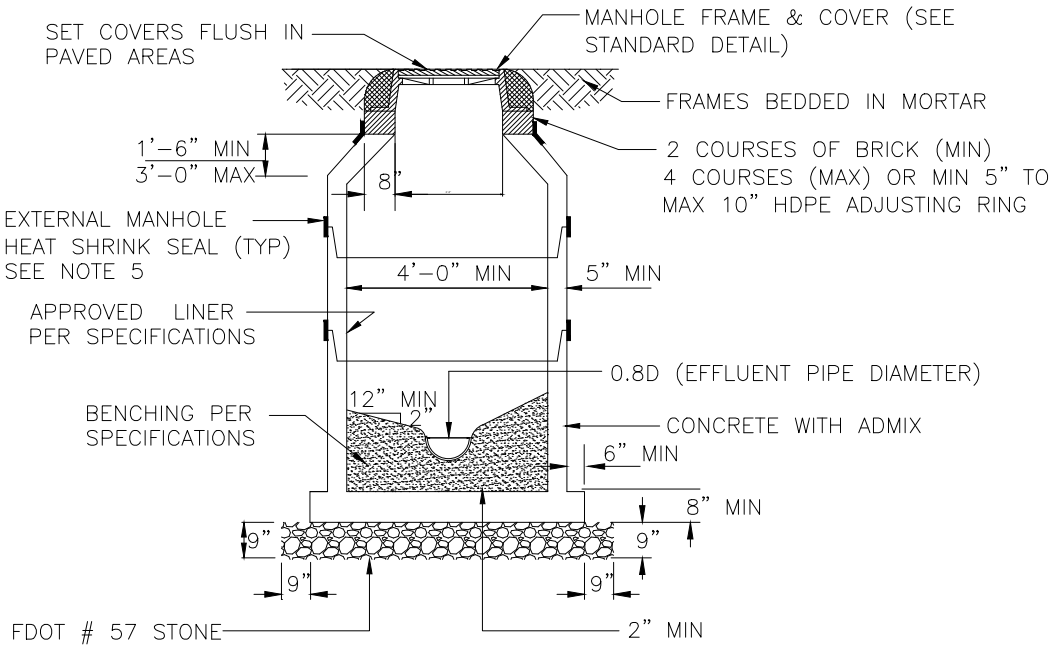

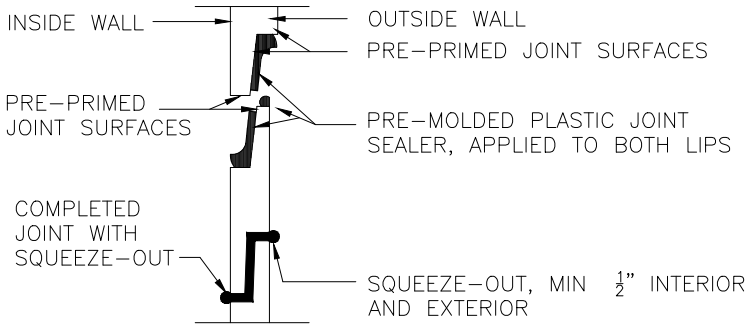

NOTES:

1. DROP CONNECTIONS ARE REQUIRED WHENEVER INVERT OF INFLUENT SEWER IS 24" OR MORE ABOVE THE INVERT OF THE MANHOLE. SEE MANHOLE CONNECTION DETAIL.
2. ECCENTRIC CONE DESIGN MAY BE USED FOR CONFLICT RESOLUTION WITH MCU APPROVAL.
3. A FLOW CHANNEL SHALL BE CONSTRUCTED INSIDE MANHOLE TO DIRECT INFLUENT INTO FLOW STREAM.
4. LIFT HOLES THROUGH STRUCTURE ARE NOT PERMITTED.
5. WRAP TIGHTLY AROUND CASTING JOINTS AND APPLY HIGH INTENSITY PROPANE TORCH TO EFFECTIVELY SEAL THEM FROM GROUND WATER INFILTRATION.
6. HDPE ADJUSTING RINGS MAY BE SUBSTITUTED FOR BRICK RISERS.
7. SECTION HEIGHTS VARY AS REQUIRED, AND AS AVAILABLE, FROM APPROVED MANUFACTURERS LISTED IN APPENDIX D.

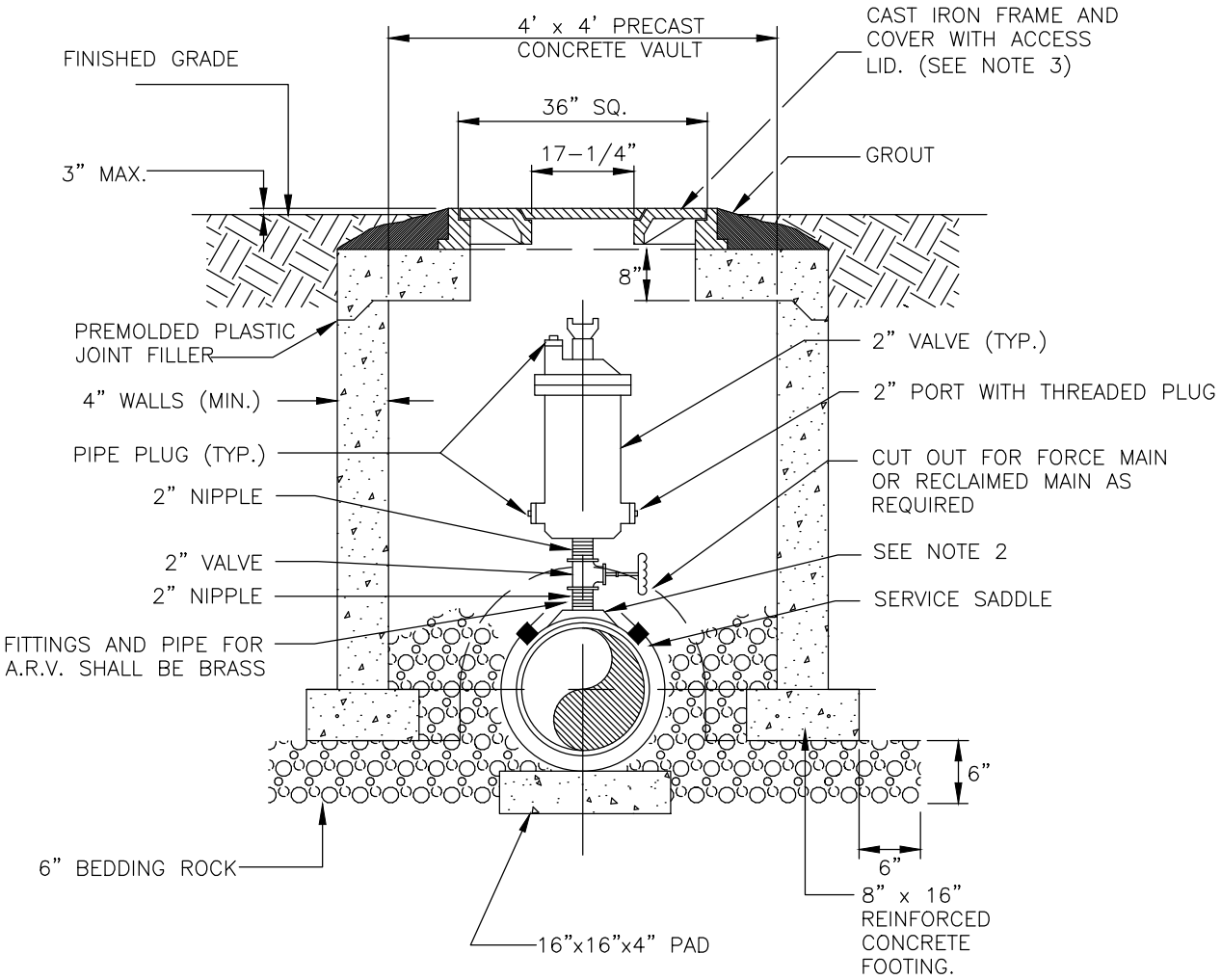

NOTES:

1. ABOVE DETAIL IS BASED ON 2" COMBINATION AIR/VACUUM RELEASE VALVE. CHANGE PIPE AND FITTINGS ACCORDINGLY FOR OTHER VALVE SIZES AND TYPES. VALVE SIZES TO BE DETERMINED BY THE ENGINEER AND APPROVED BY THE COUNTY PRIOR TO INSTALLATION.
2. THE MINIMUM DIMENSION FROM TOP OF PIPE TO FINISHED GRADE SHALL BE 3.0 FEET LID TO BE LETTERED WITH THE APPROPRIATE WORD "SEWER" OR "RECLAIMED".

Marion County FLORIDA UTILITIES	MCBCC ADOPTED XX/XX/XX	AIR RELEASE VALVE SEWER AND RECLAIMED	7
	REVISION #		UT 307

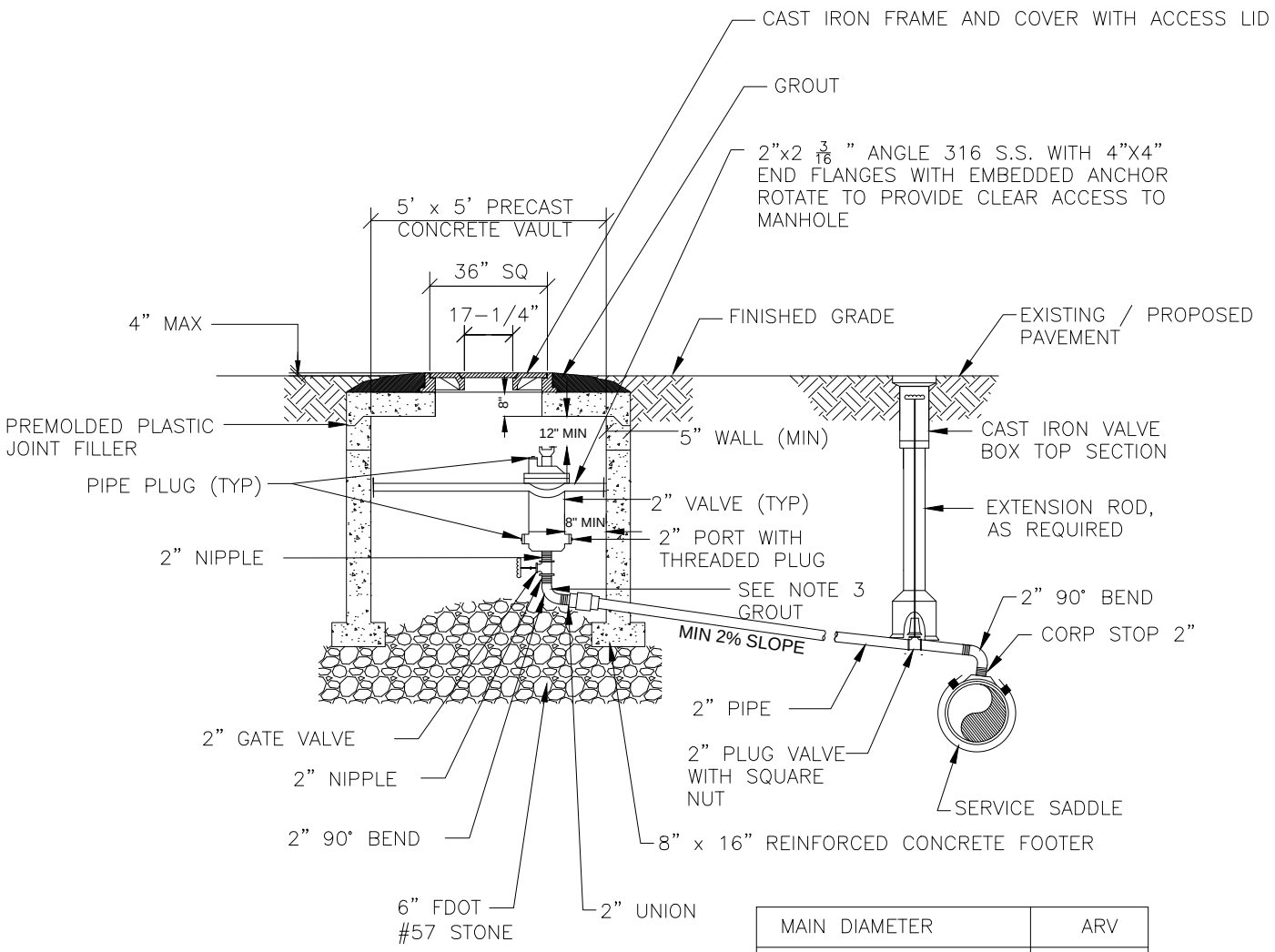

MAIN DIAMETER	ARV
12" AND SMALLER	2"
16"	3"
20", 24"	4"
30", 36"	6"

NOTES:

1. ABOVE DETAIL APPLIES TO A 2" ARV. FOR LARGER ARVS, PIPE DIAMETER SHALL BE EQUAL TO THE SIZE OF THE ARV.
2. THE MINIMUM DIMENSION FROM ELBOW INVERT TO FINISHED GRADE SHALL BE 4.0 FEET.
3. ALL PIPING, VALVES, AND APPURTENANCES TO BE BRASS OR 316 S.S EXCEPT WHERE SPECIFIED OTHERWISE.
4. OFFSET DISTANCE TO BE FIELD DETERMINED AND AS CLOSE TO THE RIGHT OF WAY AS POSSIBLE AND CLEAR OF PEDESTRIAN WALKWAYS. IF PIPE AT RIGHT OF WAY LINE, NO OFFSET REQUIRED.

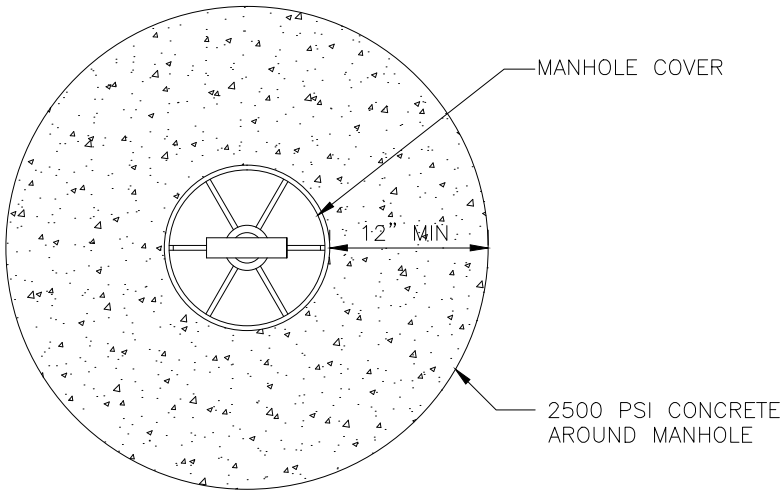

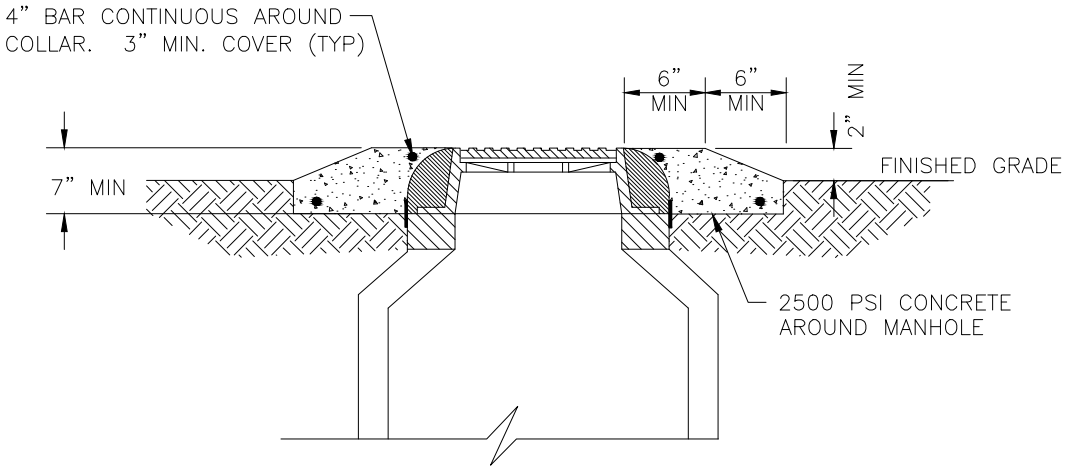

NOTES:

1. CLEARANCE OF 30" FREE FROM OBSTRUCTIONS IN ALL DIRECTIONS.
2. AREAS SUPPORTING CONCRETE COLLAR OR SLAB SHALL BE PROPERLY COMPACTED.
3. TOP OF MANHOLE SHALL BE 2" ABOVE FINISHED GRADE, CROWN OF ADJACENT ROADWAY, OR 100 YEAR FLOOD ELEVATION, WHICHEVER IS GREATER.

Marion County FLORIDA UTILITIES	MCBCC ADOPTED XX/XX/XX	MANHOLE IN NON-PAVED AREA	7
	REVISION #		UT 309

N.T.S

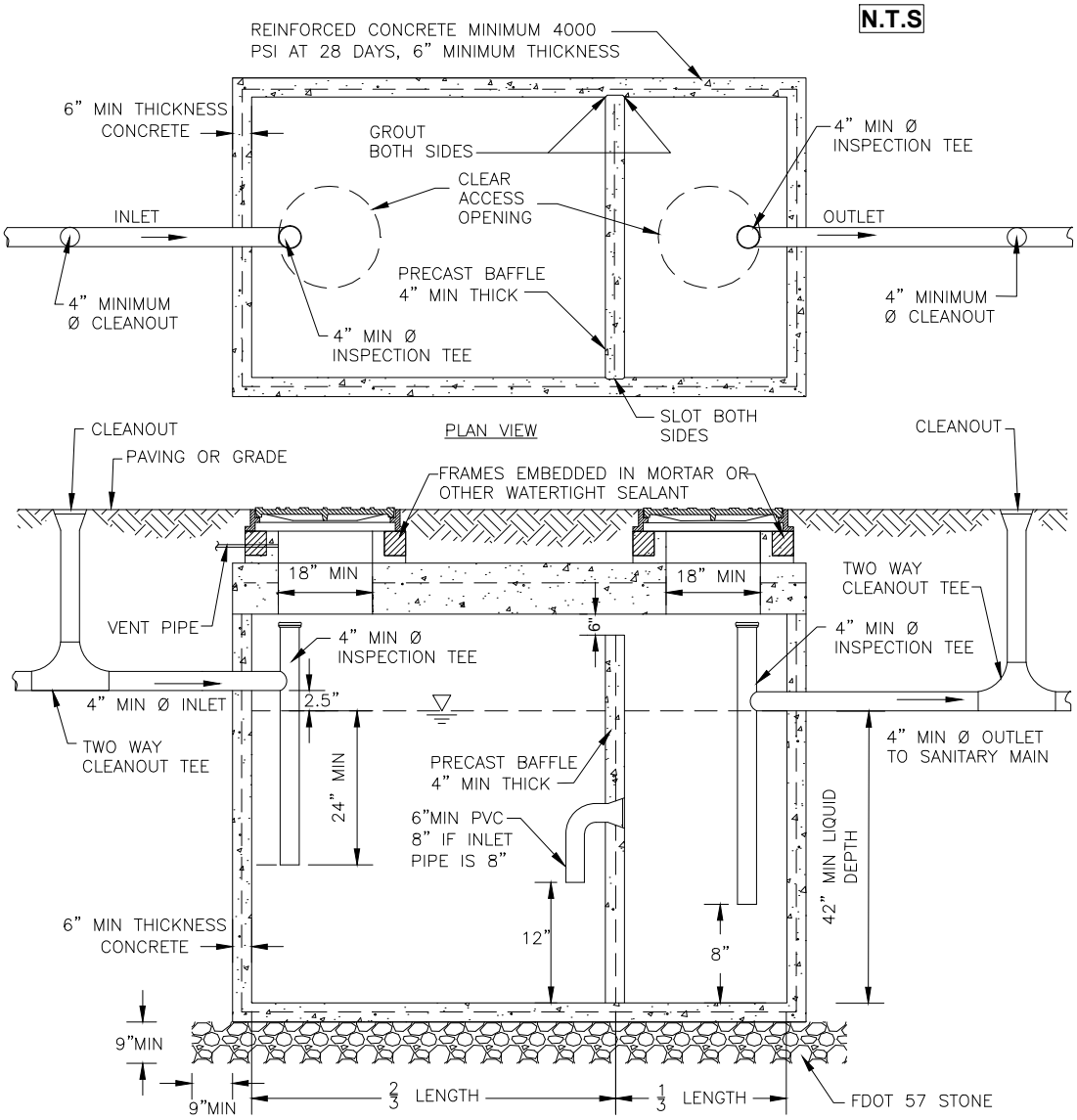

NOTES:
1. SPECIFIC DESIGN DETAILS MUST IN ALL ASPECTS MEET APPLICABLE FLORIDA PLUMBING AND ADMINISTRATIVE CODE.
2. SIZE GREASE INTERCEPTOR PER MARION COUNTY LAND DEVELOPMENT CODE.
3. INTERCEPTORS SHALL BE WATER AND GAS TIGHT.
4. ALL FIXTURES LOCATED IN FOOD AND BEVERAGE PREPARATION AREAS SHALL BE ROUTED THOUGH GREASE INTERCEPTOR. RESTROOM WASTE SHALL NOT BE ROUTED THROUGH INTERCEPTOR.
5. BAFFLE REQUIRED; ALTERNATIVE DESIGNS ARE ACCEPTABLE. DESIGN MUST MEET FLORIDA PLUMBING AND ADMINISTRATIVE CODE.
6. LOADS: H-20 TRUCK WHEELS WITH 30% IMPACT PER AASHTO. TRAFFIC BEARING FRAME AND COVER TO MEET FDOT STANDARDS IF APPLICABLE.

Marion County FLORIDA UTILITIES	MCBCC ADOPTED XX/XX/XX	GREASE INTERCEPTOR	7
	REVISION #		UT 310

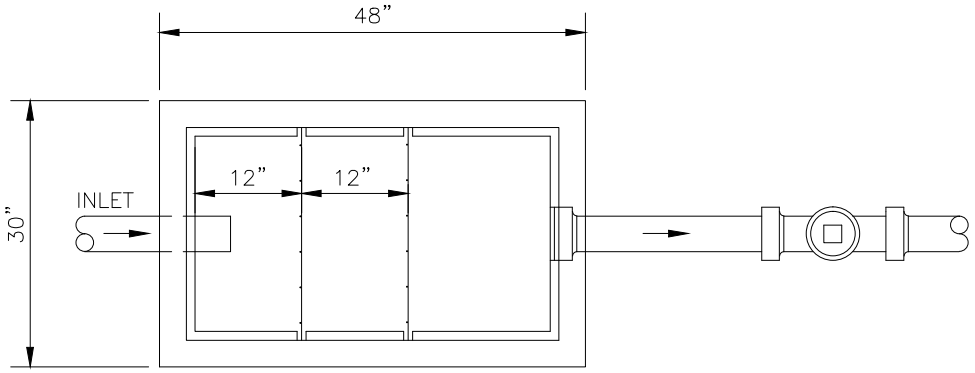

PLAN

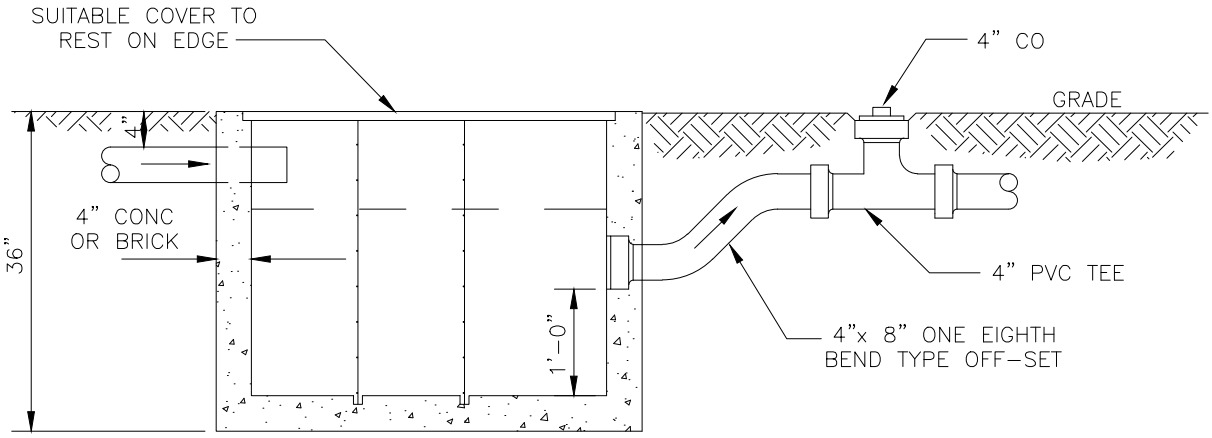

SECTION

Marion County FLORIDA UTILITIES	MCBCC ADOPTED XX/XX/XX	LINT TRAP	7
	REVISION #		UT 311

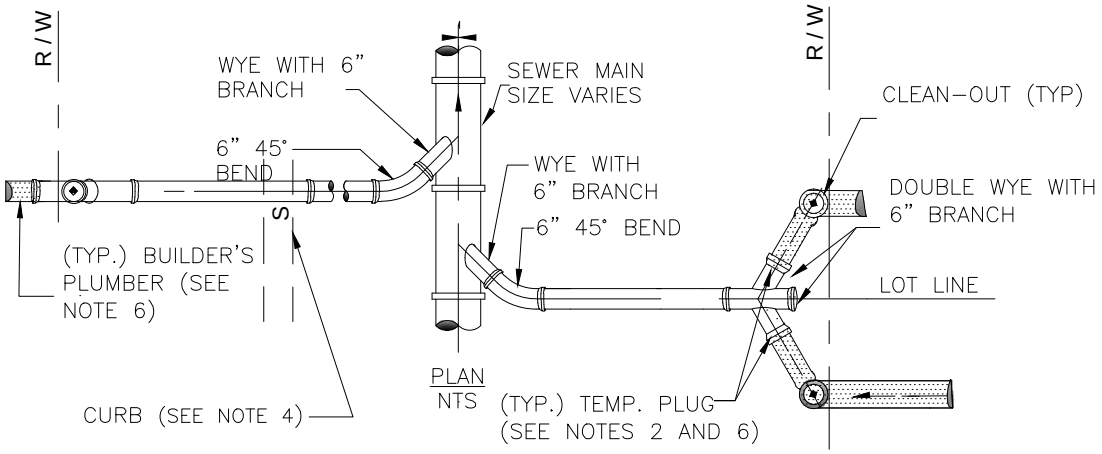

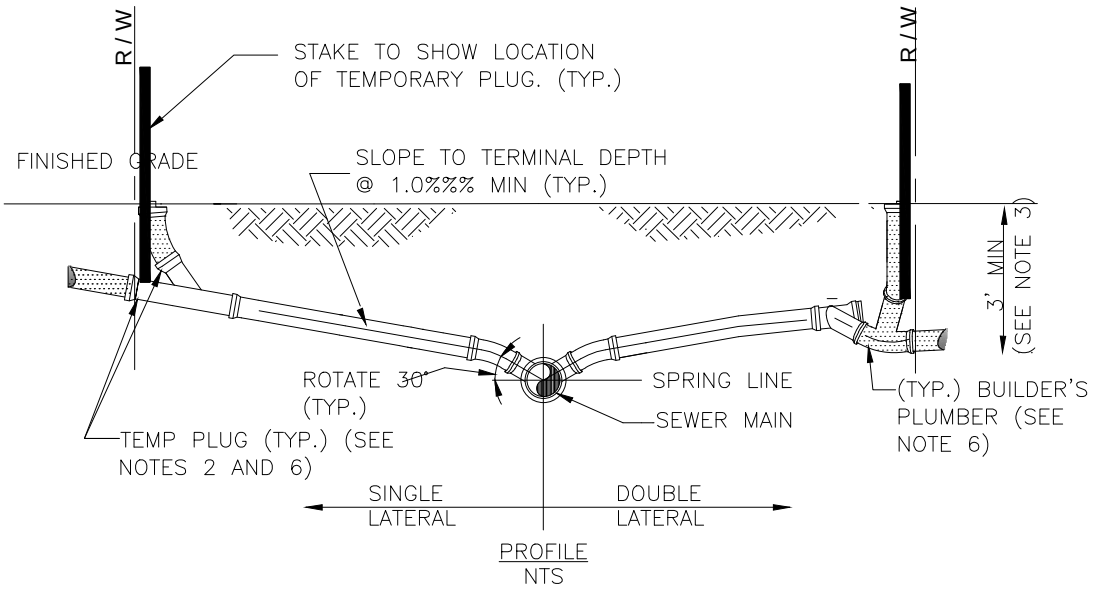

NOTES:
1. INVERT OF SERVICE LATERAL SHALL NOT ENTER SEWER MAIN BELOW SPRING LINE.
2. SERVICE LATERAL SHALL BE CAPPED BY DEVELOPER'S SITE-WORK CONTRACTOR.
3. WYE TO BE NO SHALLOWER THAN 3-FEET AND NO DEEPER THAN 5-FEET.
4. ALL FITTINGS SHOWN ARE TO BE INSTALLED.
5. SERVICE CONNECTIONS SHALL BE PERMANENTLY MARKED BY CUTTING AN "S" IN THE CURB DIRECTLY OVER THE LATERAL.
6. BUILDER'S PLUMBER WILL REMOVE PLUG, INSTALL CLEANOUT, AND CONNECT SERVICE LATERAL TO HOUSE.

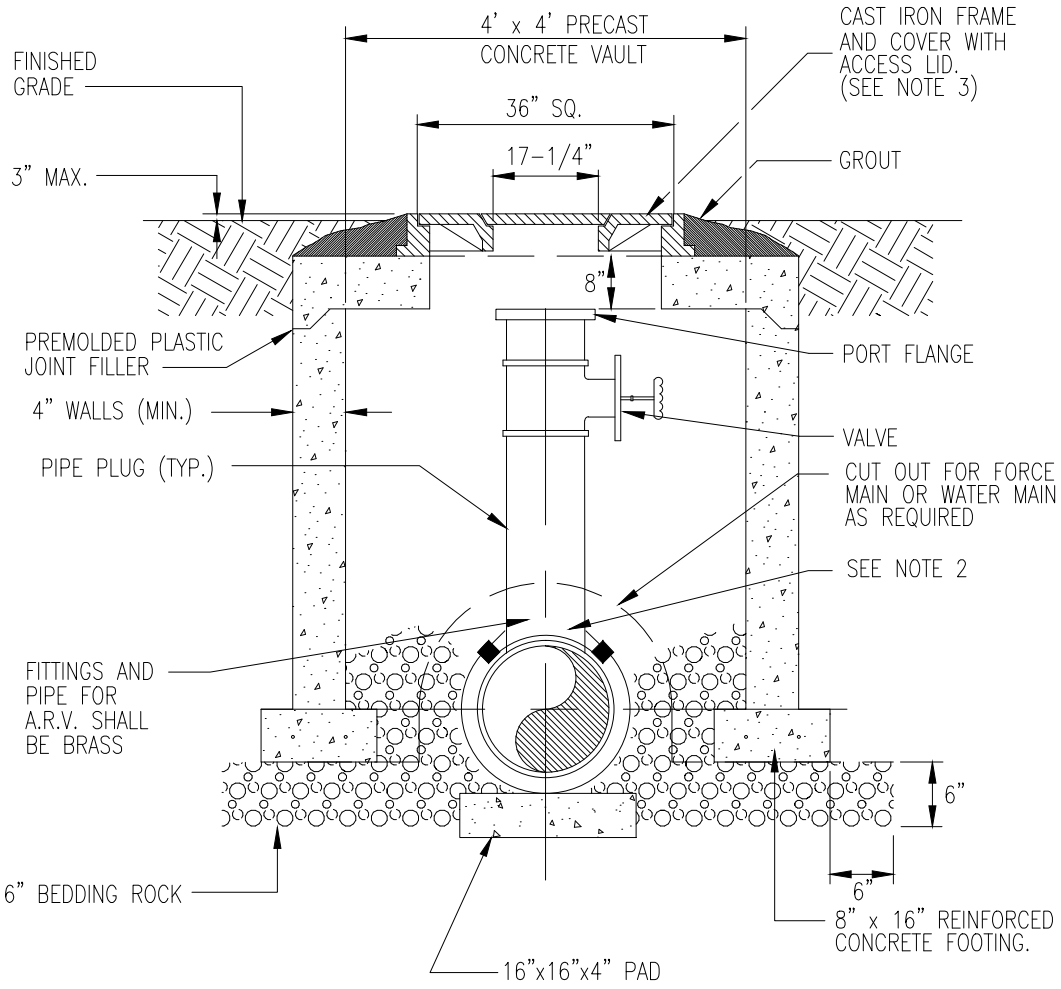

NOTES:

1. ABOVE DETAIL IS BASED ON 2" COMBINATION AIR/VACUUM RELEASE VALVE. CHANGE PIPE AND FITTINGS ACCORDINGLY FOR OTHER VALVE SIZES AND TYPES. VALVE SIZES TO BE DETERMINED BY THE ENGINEER AND APPROVED BY THE COUNTY PRIOR TO INSTALLATION.
2. THE MINIMUM DIMENSION FROM TOP OF PIPE TO FINISHED GRADE SHALL BE 3.0 FEET
3. LID TO BE LETTERED WITH THE APPROPRIATE WORD "WATER" OR "SEWER".

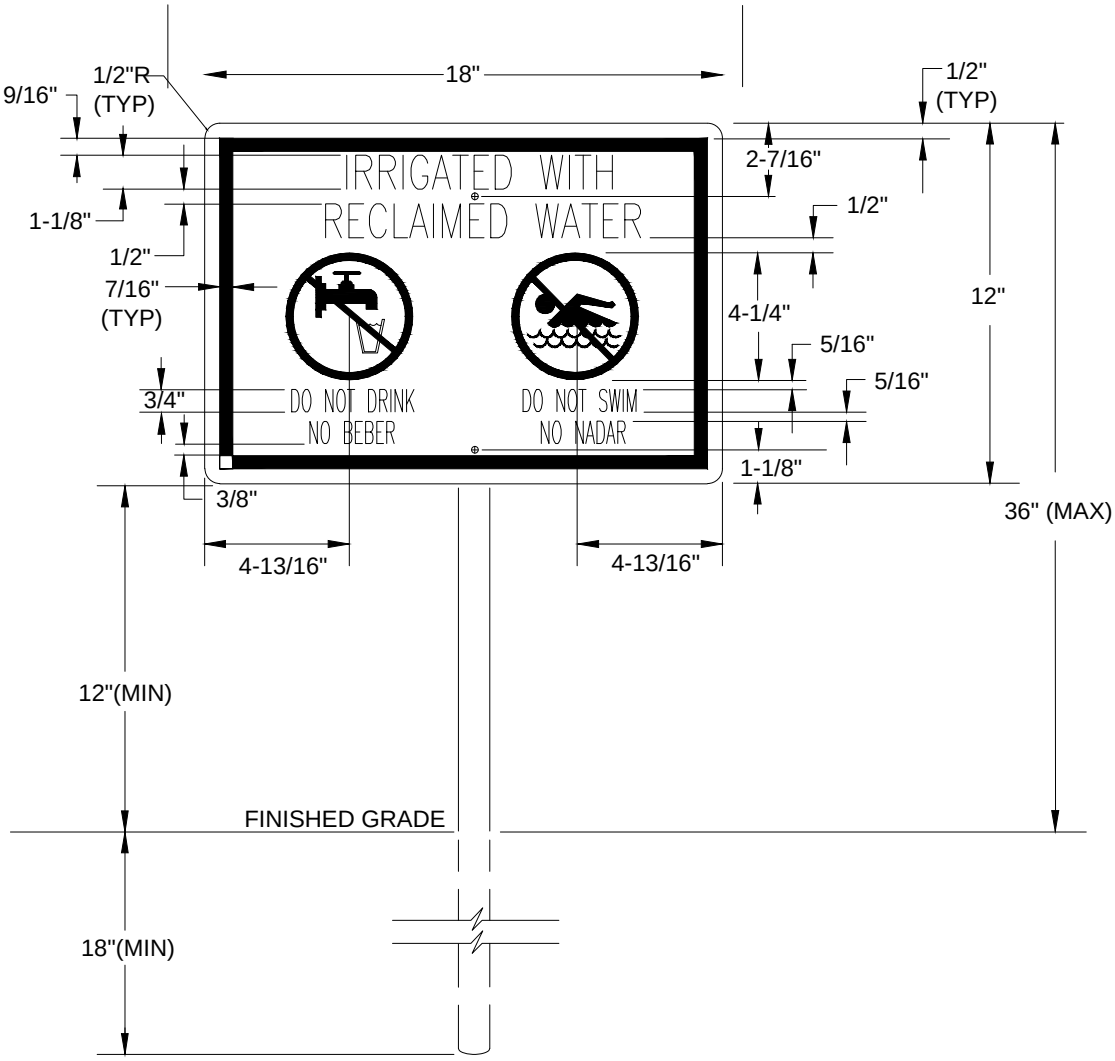

NOTES:

1. SIGN TO BE PROVIDED BY CONTRACTOR.
2. HEIGHT OF SIGN WILL DEPEND ON LOCATION AND SURROUNDING LANDSCAPE PLANT TYPES. IN ALL CASES, THE SIGN SHALL BE VISIBLE TO THE PUBLIC.
3. BACKGROUND SHALL BE WHITE, LETTERS SHALL BE BLACK (HELVETICA, SWISS 721 COREL OR ACCEPTABLE EQUAL) AND BORDER SHALL BE PANTONE PURPLE 522C.
4. ENGINEERING GRADE REFLECTIVE MATERIALS SHALL BE USED.
5. SIGN MATERIAL SHALL BE OF 0.040 GAUGE METAL.
6. POST SHALL BE 2-3/8" OD STEEL PIPE, HOT DIP GALVANIZED PER ASTM A-123. POST TO BE PROVIDED BY CUSTOMER.
7. MOUNTING HARDWARE SHALL BE STAINLESS STEEL.
8. SIGNS SHALL BE PLACED BY THE CONTRACTOR IN ACCORDANCE WITH CHAPTER 62-610 "ACCESS CONTROL AND ADVISORY SIGNS", FAC, THE COUNTY APPROVED ENGINEERING PLANS AND/OR AS APPROVED BY UTILITIES.

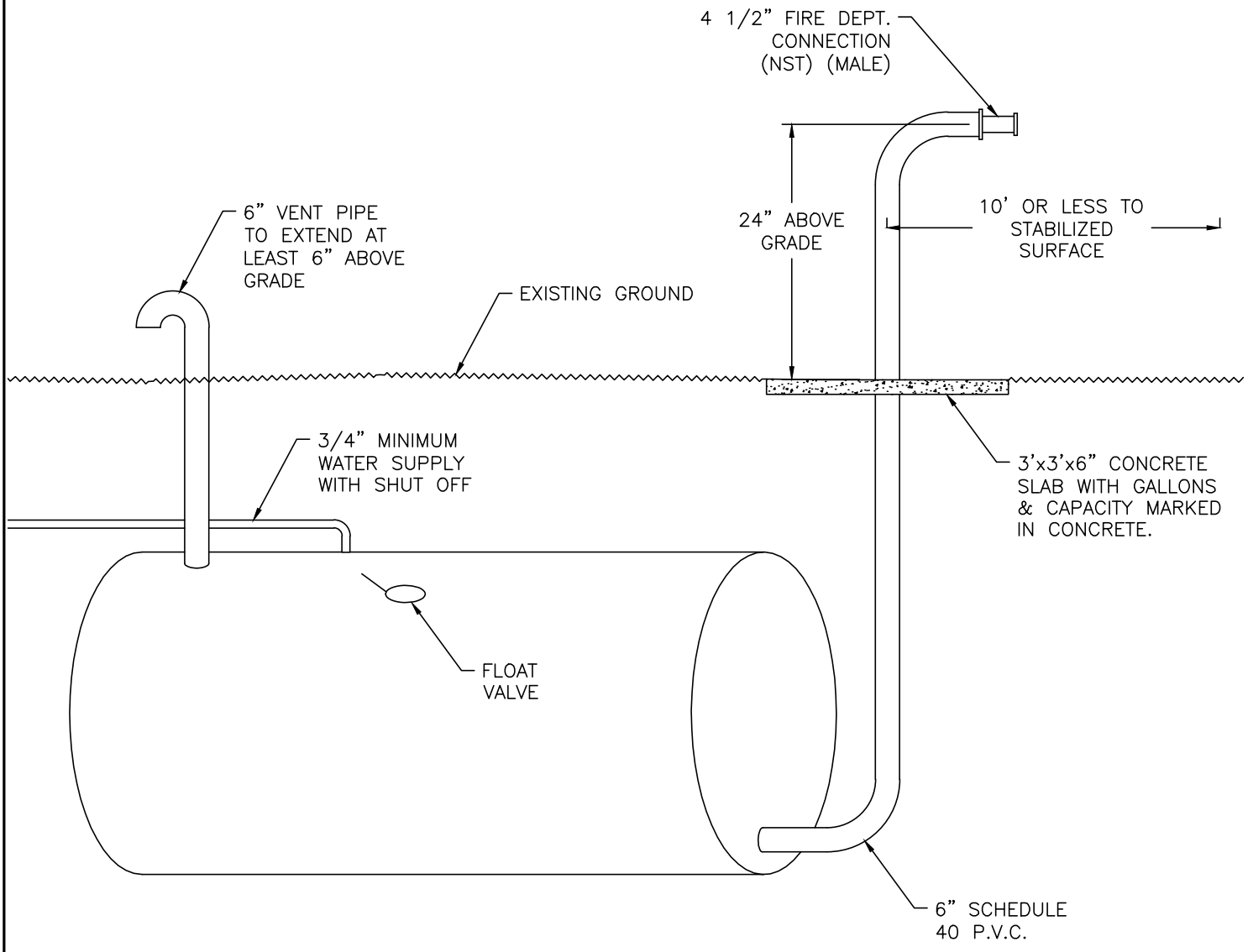

- IF MULTIPLE TANKS ARE REQUIRED, THEY MUST BE MANIFOLDED TOGETHER INTO A SINGLE RISER.
- RISER SHALL BE A MINIMUM OF 1.5 x BUILDING HEIGHT AWAY FROM BUILDING, HOWEVER IT IS OFTEN AN ADVANTAGE FOR PROPOERTY OWNERS AND THE FIRE DEPARTMENT TO HAVE RISER INSTALLED A SIGNIFICANT DISTANCE AWAY FROM BUILDING (UP TO 100').
- PREFERRED METHOD FOR RISER LAYOUT IS TO CONTACT MARION COUNTY FIRE PREVENTION AT 291–8000.

EXAMPLE OF A SINGLE TANK SYSTEM

THIS DETAIL IS A GENERAL REPRESENTATION AND IS NOT TO SCALE

Marion County FLORIDA FIRE RESCUE	MCBCC ADOPTED XX/XX/XX REVISION #	DRY HYDRANT DETAIL	7 FR 001

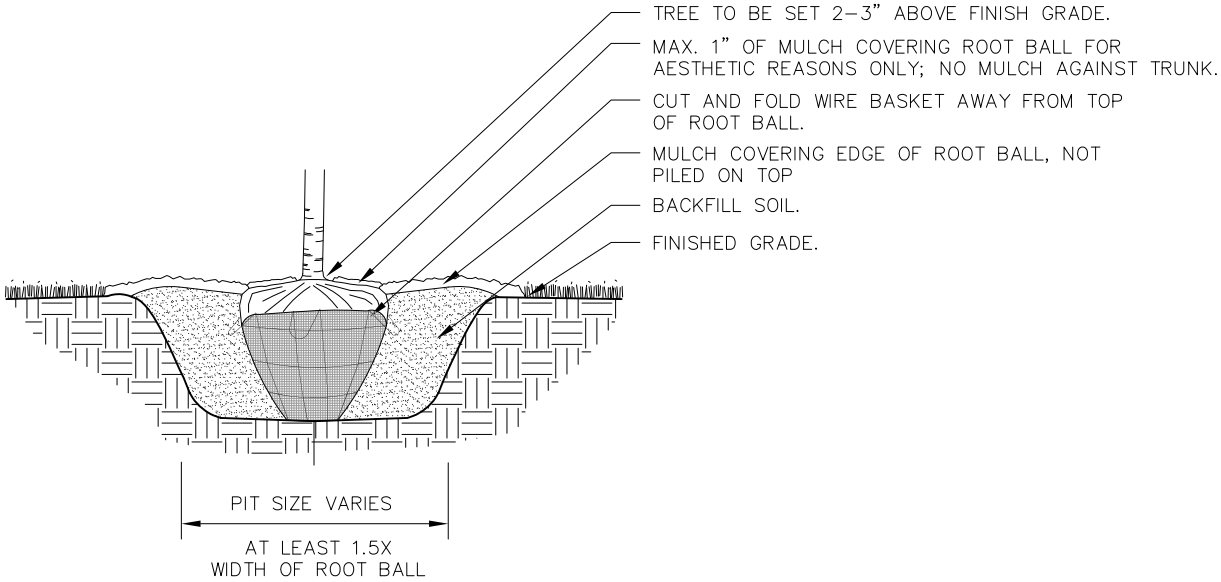

TREE PLANTING PIT DETAIL
(BALLED AND BURLAPPED)

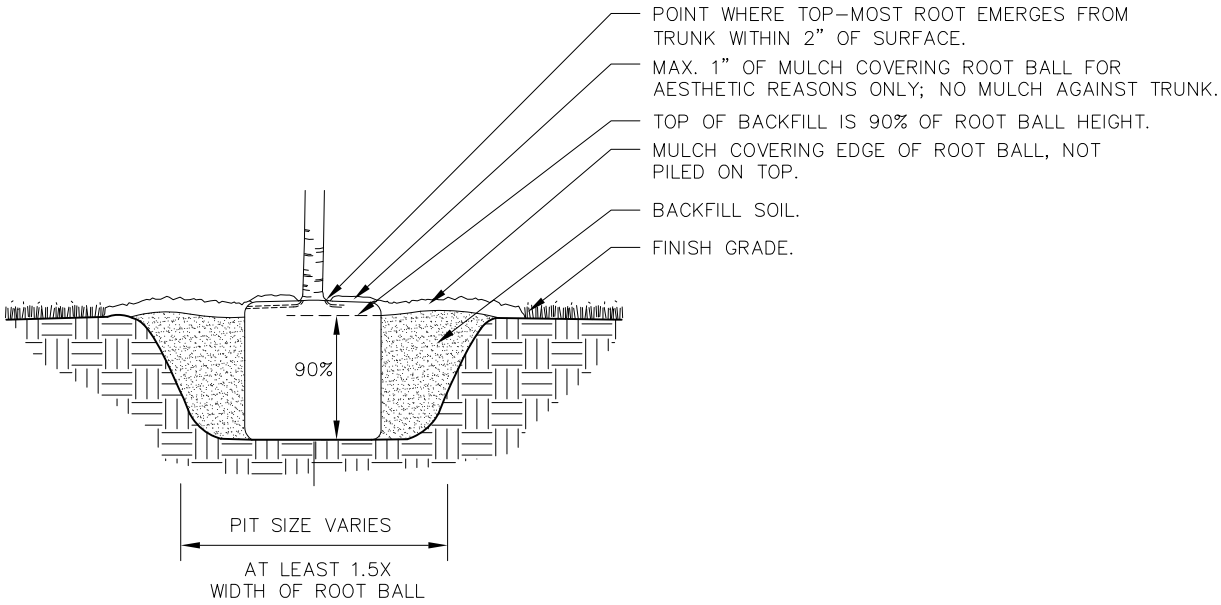

TREE PLANTING PIT DETAIL
(CONTAINER GROWN)

NOTES:

1. REMOVE ALL SYNTHETIC MATERIALS INCLUDING STRAPS, STRINGS, AND SYNTHETIC BURLAP. NATURAL BURLAP MAY BE LEFT IN PLACE.
2. ALL ROOT SYSTEMS SHALL BE REASONABLY FREE OF ROOT DEFECTS INCLUDING:
   A. POTENTIALLY STEM–GIRDLING ROOTS ABOVE THE ROOT COLLAR AND MAIN STRUCTURAL ROOTS,
   B. VERTICAL ROOTS, AND
   C. KINKED ROOTS.
3. BACKFILL SOIL SHALL BE NATIVE SOIL REMOVED FROM PIT FREE OF ROCKS, STICKS AND OTHER DELETERIOUS SOILS. WATER–IN AND LIGHTGHTLY COMPACT BACKFILL TO REMOVE AIR POCKETS.
4. MULCH OR SOIL BERMS ARE NOT REQUIRED UNLESS TREE IS WATERED BY HOSE, BUCKET OR OTHER HIGH VOLUME METHOD.

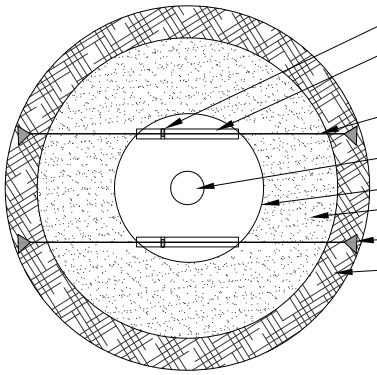

3/4" WIRE CINCH BUCKLE WITH LOCKING MECHANISM, TYP.

2" X 4" WOODEN SUPPORT, TYP.; NOT TO EXCEED WIDTH OF ROOTBALL; LOCATE 1" TO 3" FROM TRUNK, NOT ON ROOT FLARE.

3/4" WIDE HIGH TENACITY 2,400lb. WOVEN POLYESTER STRAPPING, TYP.

TREE TRUNK.

ROOTBALL.

TREE PIT.

ANCHOR, TYP.

MULCH RING.

PLAN VIEW

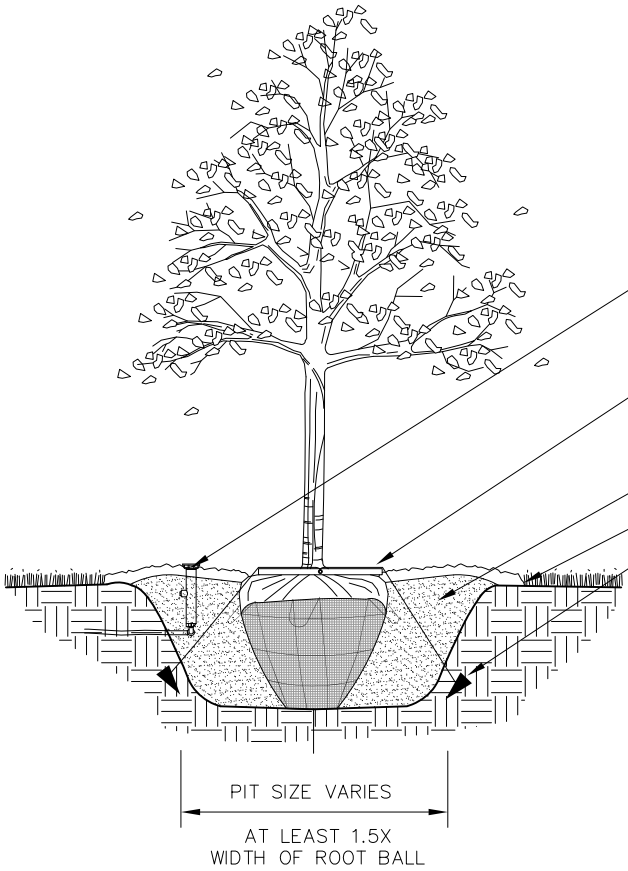

IRRIGATION DEVICE TO BE INSTALLED WITHIN TREE PIT; DRIP IRRIGATION TO BE SET BELOW MULCH. MULCH OR SOIL BERM ARE NOT REQUIRED UNLESS TREE IS WATERED BY HOSE, BUCKET OR OTHER HIGH-VOLUME METHOD.

ROOT BALL STAKING KIT; (2) 2" X 4" LUMBER ACROSS TOP OF ROOT BALL; RATCHETING TENSIONER WITH RATCHET LOCK, SECURED TIGHTLY. LUMBER TO BE 4" IN FROM EDGE OF ROOT BALL. USE LONGER LUMBER FOR LARGER ROOT BALLS.

BACKFILL SOIL.

FINISH GRADE.

ARROWHEAD TO BE SET INTO UNDISTURBED SOIL.

TREE INSTALLATION WITH ROOT BALL KIT

(TREES OVER 10' HEIGHT AT INSTALLATION AND WITHIN PUBLICLY USED AREAS)

SET TREE AND APPLY MULCH PER TREE PLANTING PIT DETAIL

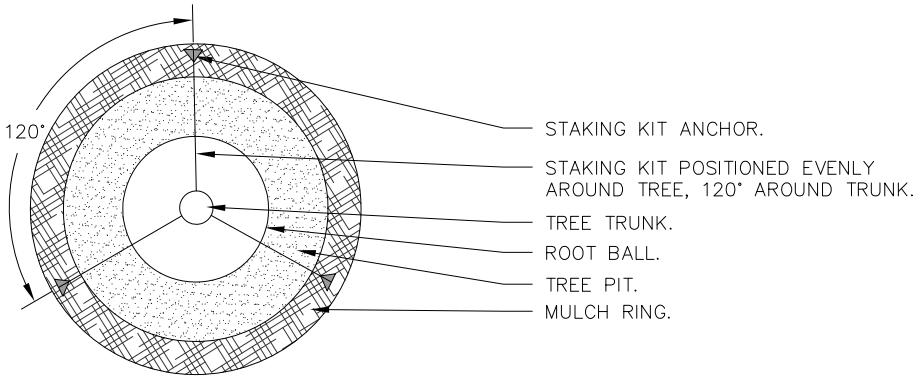

PLAN VIEW

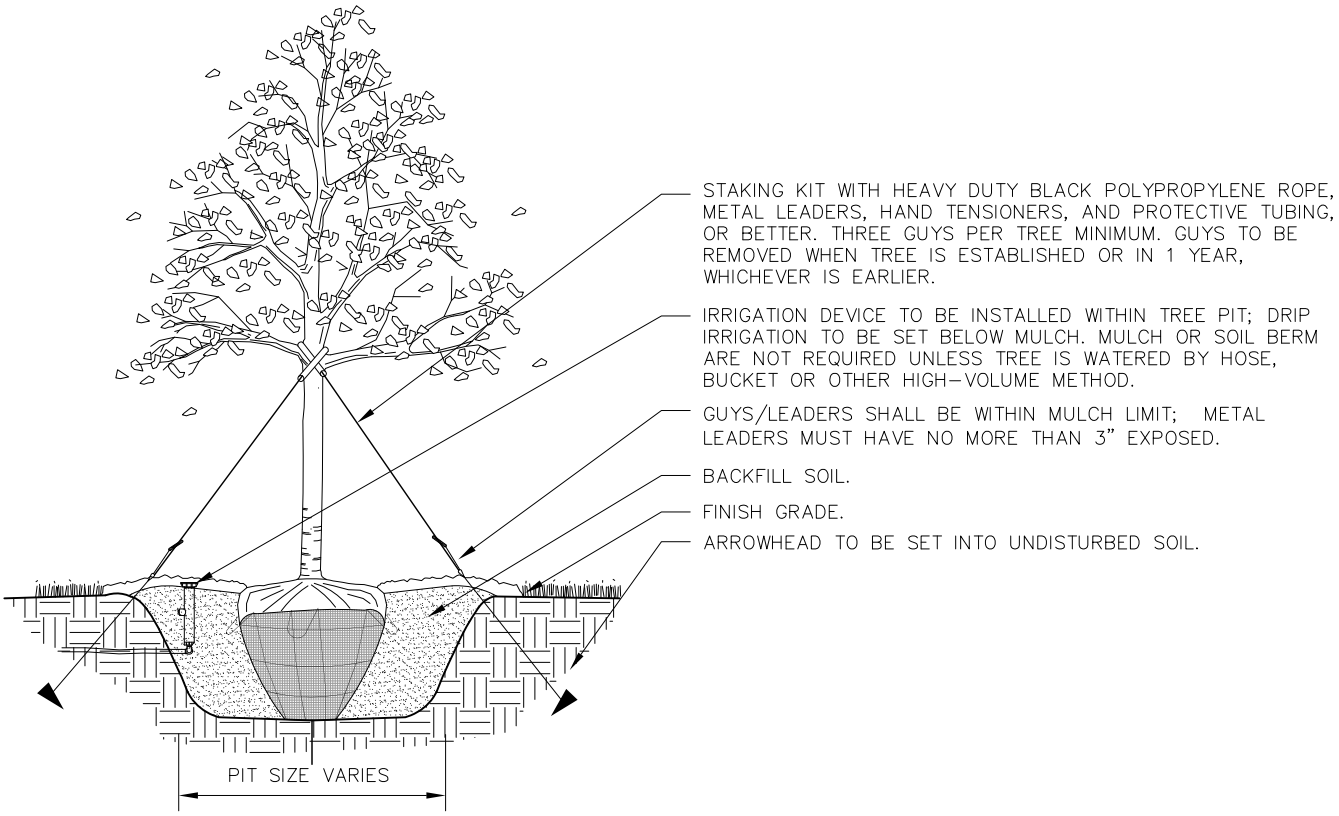

TREE INSTALLATION WITH STAKING KIT

(TREES OVER 10' HEIGHT AT INSTALLATION AND AWAY FROM PUBLICLY USED AREAS)
SET TREE AND APPLY MULCH PER TREE PIT DETAIL

Marion County FLORIDA PARKS AND RECREATION	MCBCC ADOPTED XX/XX/XX	LANDSCAPE INSTALLATION	1
	REVISION #		LS 003

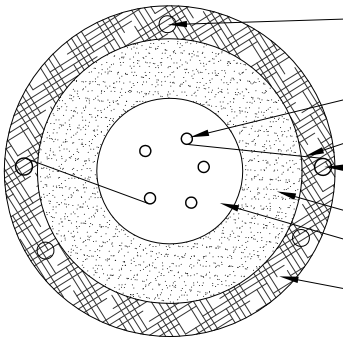

PLAN VIEW

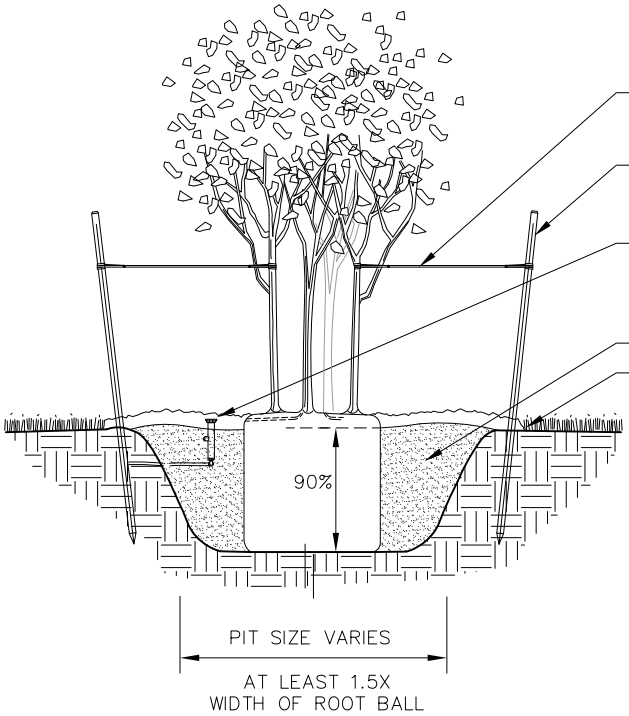

TREE INSTALLATION WITH LODGE POLES

(TREES UNDER 10' HEIGHT AT INSTALLATION)

SET TREE AND APPLY MULCH PER TREE PIT DETAIL

Marion County FLORIDA PARKS AND RECREATION	MCBCC ADOPTED XX/XX/XX	LANDSCAPE INSTALLATION	1
	REVISION #		LS 004

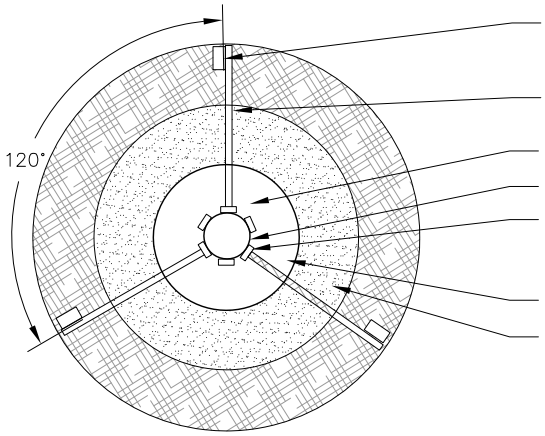

SECURE BRACES TO 3' PT WOOD STAKE SECURELY DRIVEN INTO UNDISTURBED SOILS, INSIDE MULCH RING.

(3) 2'X4' PT WOOD BRACES; SECURED TO BATTENS WITH NAILS; DO NOT NAIL INTO TRUNK.

MULCH RING.

PALM TRUNK.

5+ LAYERS BURLAP UNDER MIN. 6 WOOD BATTENS; CONNECT WITH 3/4" METAL BANDS; AVOID OVER-TIGHTENING.

ROOT BALL.

PLANTING PIT.

PLAN VIEW

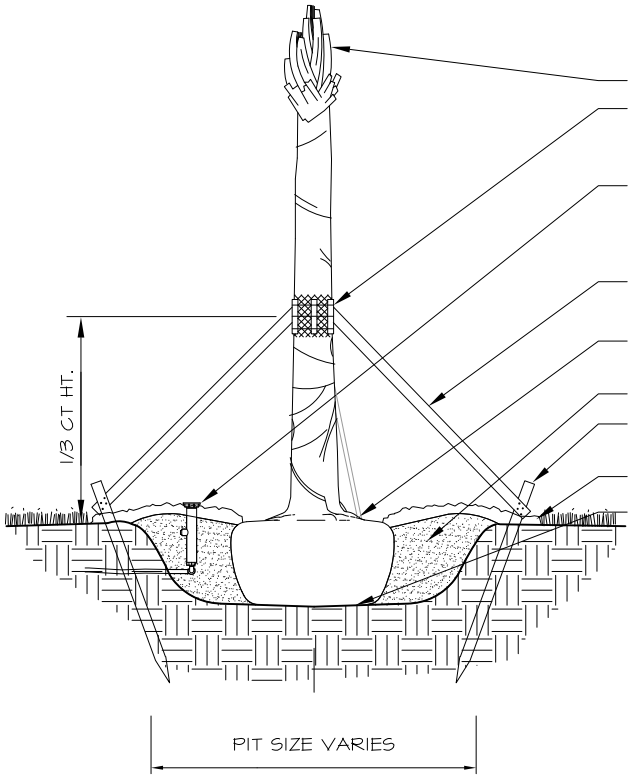

HURRICANE CUT; PROTECT LEAD BUD.

5+ LAYERS BURLAP UNDER MIN. 6 WOOD BATTENS; CONNECT WITH 3/4" METAL BANDS; AVOID OVER-TIGHTENING.

IRRIGATION DEVICE TO BE INSTALLED WITHIN TREE PIT; DRIP IRRIGATION TO BE SET BELOW MULCH. MULCH OR SOIL BERM ARE NOT REQUIRED UNLESS TREE IS WATERED BY HOSE, BUCKET OR OTHER HIGH-VOLUME METHOD.

(3) 2'X4' PT WOOD BRACES; SECURED TO BATTENS WITH NAILS; DO NOT NAIL INTO TRUNK.

TOP OF PALM ROOT BALL TO BE SET AT THE GRADE FROM WHICH PALM WAS HARVESTED.

BACKFILL SOIL.

SECURE BRACES TO 3' PT WOOD STAKE SECURELY DRIVEN INTO UNDISTURBED SOILS, INSIDE MULCH RING.

FINISH GRADE.

PLACE ROOT BALL ON UNDISTURBED SOIL.

PALM INSTALLATION WITH BATTEN KIT

Marion County FLORIDA PARKS AND RECREATION	MCBCC ADOPTED XX/XX/XX	LANDSCAPE INSTALLATION	1
	REVISION #		LS 005

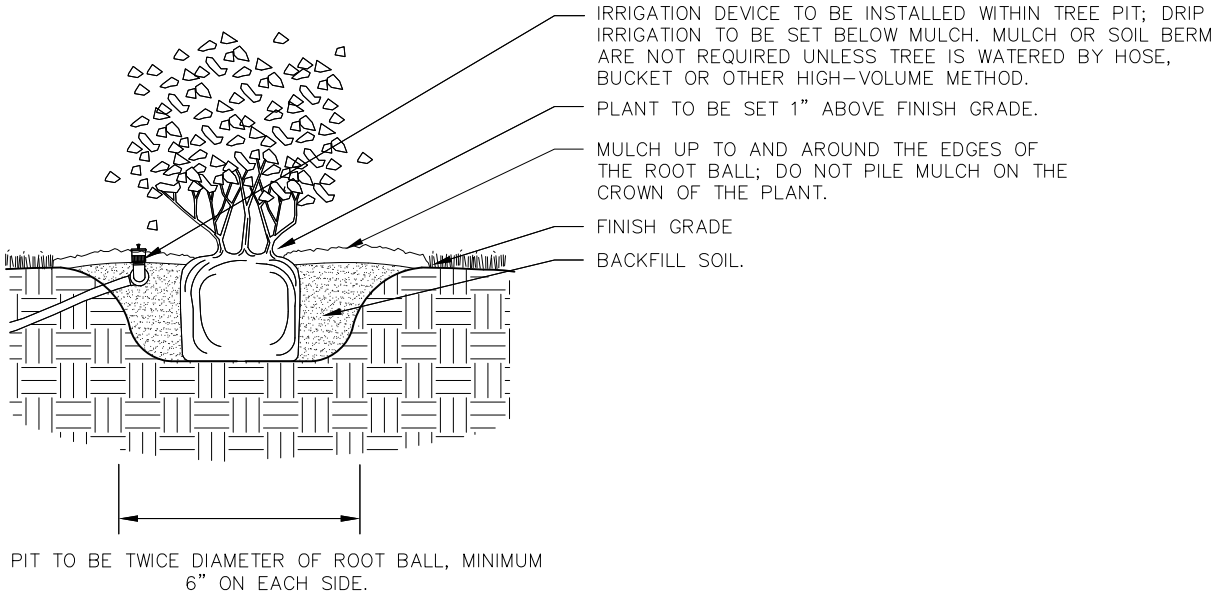

SHRUB INSTALLATION

Marion County FLORIDA PARKS AND RECREATION	MCBCC ADOPTED XX/XX/XX	LANDSCAPE INSTALLATION	1
	REVISION #		LS 006

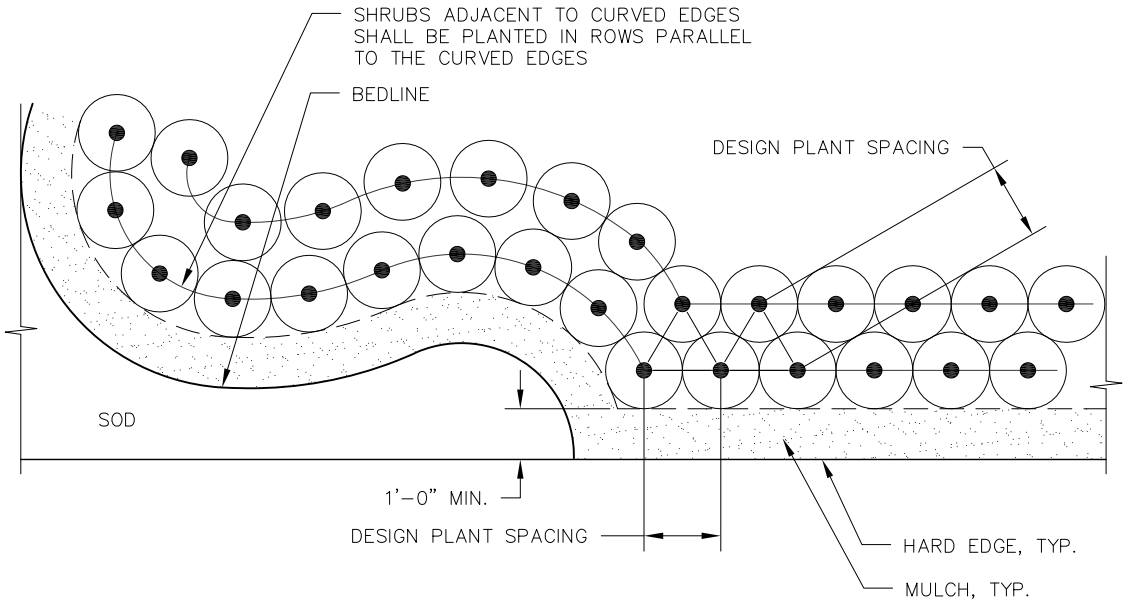

PLANT MASSING LAYOUT

Marion County FLORIDA PARKS AND RECREATION	MCBCC ADOPTED XX/XX/XX	LANDSCAPE INSTALLATION	1
	REVISION #		LS 007

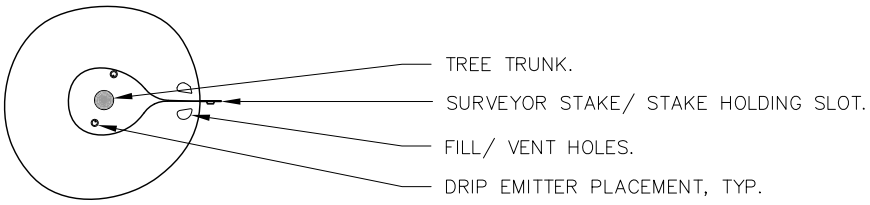

TOP VIEW
(SHOWN WITH TREE CANOPY REMOVED FOR CLARITY)

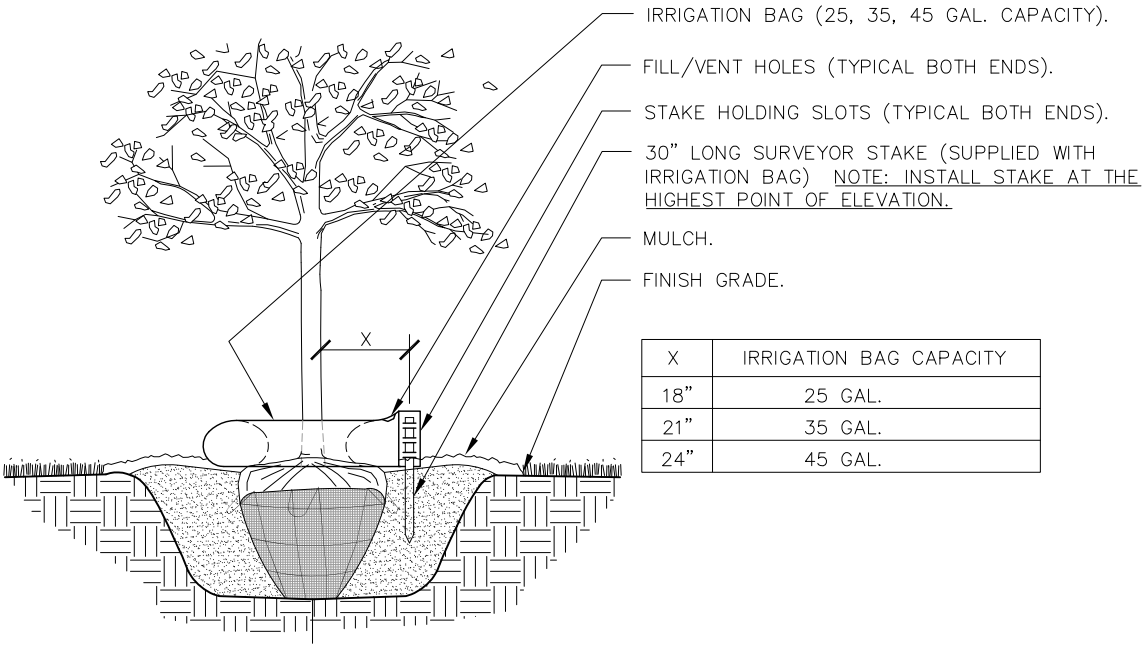

X	IRRIGATION BAG CAPACITY
18"	25 GAL.
21"	35 GAL.
24"	45 GAL.

IRRIGATION BAG INSTALLATION

SET TREE AND APPLY MULCH PER TREE PIT DETAIL.
SECURE TREE/PALM BY APPROPRIATE DETAIL.

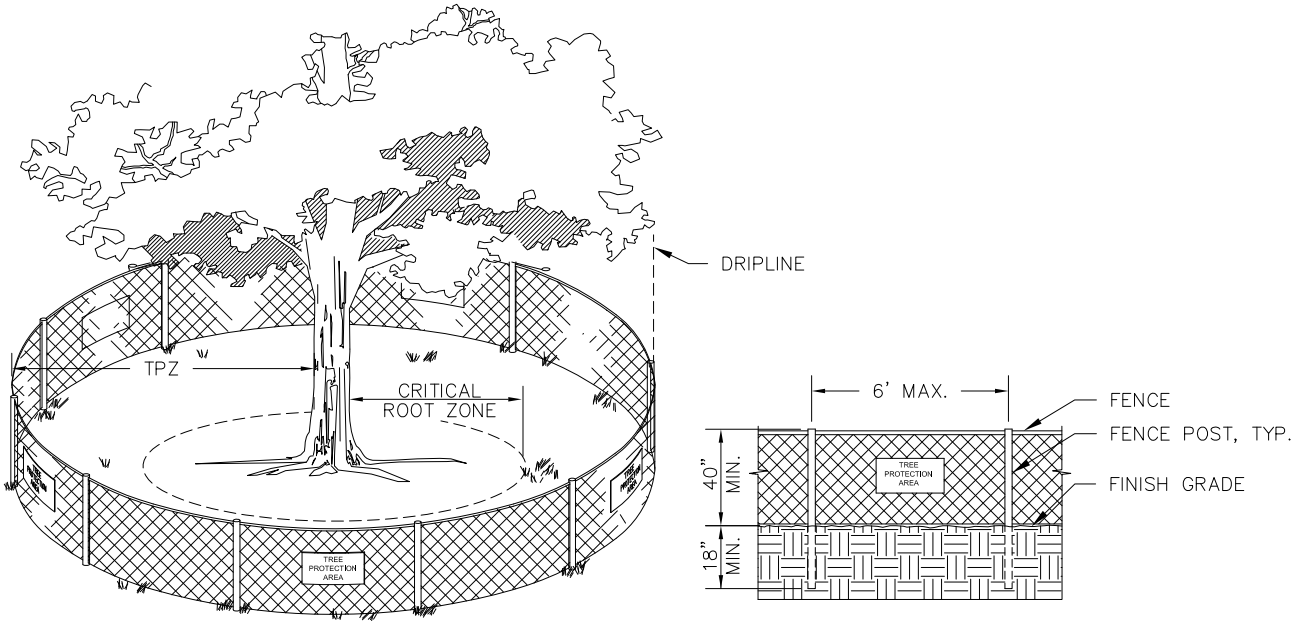

TREE PROTECTION DETAIL

Marion County FLORIDA PARKS AND RECREATION	MCBCC ADOPTED XX/XX/XX	LANDSCAPE INSTALLATION	1
	REVISION #		LS 009