Marion County
Board of County Commissioners
Building Safety ◆ Permitting

2710 E. Silver Springs Blvd.
Ocala, FL 34470
Phone: 352-438-2400
Fax: 352-438-2401

Checklist: DECKS, RAMPS, PLATFORMS, STAIRS, LANDING and BALCONIES

Wood Deck permitting exemptions: Residential wood or plastic composite decks built on the ground or are accessed by 1or less step or riser.

	Permit Application	**Permit Application must be completed and signed by:** Owner - if submitting permit application as Owner/Builder. Mobile Home Owners- must submit a copy of Mobile Home title. Licensed Contractor - if contractor is submitting permit application. Subcontractor - if one is used (Contractor's Name, Marion County Certificate number, State License number, signature or email is required on permit application. **Note:** Original Signatures are required and must be notarized if project cost is over: $2,500 for New Installations (Building Safety Representatives will provide notary services
	Recorded Warranty Deed	If property owner is new or recently changed, provide one copy of a recorded warranty deed. (Recorded deeds may be obtained at the Marion County Clerk of the Court).
	Site Plan	Two (2) site plans indicating the dimension of property, all streets, existing and proposed improvements (septic and/or well location). Indicate distance from proposed improvements to property lines. Indicate the front of the property and driveway location. **Zoning approval is required for all permitted and non-permitted decks, ramps, platforms, stairs, landings and balconies.**
	Engineered Plans	Two (2) sets of dimensioned plans to include; Plan and elevation / section views, post size and spacing, girder size and location, girder connection to posts. Joist type with size and spacing, joist connection to girders. Decking type and size, fastening, and anchor to ground. Vertical dimension from finish grade to proposed finish deck.
	Construction Lien Law Affidavit	Signed by the owner of the real property or signed by an assigned member through articles of incorporation, contractor or an authorized agent for the contractor.
	Notice of Commencement (NOC)	Construction over $2,500.00 requires a certified copy of the recorded NOC. The NOC must be signed by the property owner or an assigned member thru articles of incorporation. (www.sunbiz.org). The NOC must be submitted to the Building Department prior to the **First Inspection**.
	Owner / Builder Disclosure Statement	The Owner/ Builder disclosure statement is required when an owner is submitting a permit application as Owner/Builder. This affidavit must be signed and notarized in front of the Building Safety Representative.

I certify that this application includes all of the required items listed above. *I understand this packet will be rejected If any required documents are missing or incomplete.*

Print Name of Applicant /Contractor _____ Signature of Applicant/Contractor _____ Date _____

Cklt 1 - Rev 11/15

Marion County
Board of County Commissioners

Building Safety ◆ Permitting

2710 E. Silver Springs Blvd.
Ocala, FL 34470
Phone: 352-438-2400
Fax: 352-438-2401

All applications dropped off for processing must include a $50 deposit application fee.

Permits cannot be processed without this fee.

All checks / money orders should be made payable to MARION COUNTY BOCC.

Escrow account customers, you must include your account number with your permit packet.

FEE 1 – DROP OFF 10/7/15

Marion County
Board of County Commissioners

Building Safety ◆ Permitting

2710 E. Silver Springs Blvd.
Ocala, FL 34470
Phone: 352-438-2400
Fax: 352-438-2401

BUILDING PERMIT APPLICATION

Official use

Permit number: _____ **Project number:** _____

ARN number: _____ **Date:** _____ **Rep:** _____ **Code: FBC**_____

Parcel number: _____

Project address: _____ **Sec:** _____ **Twp:** _____ **Rge:** _____

Subdivision: _____ **Lot:** _____ **Block:** _____ **Unit:** _____

Property owner of record: _____ **Daytime phone:** _____

Property owner address: _____

City: _____ **State:** _____ **Zip:** _____ **Owner email address:** _____

Directions to project address: _____

_____

Contractor business name: _____ **Daytime phone:** _____

License holder's name: _____ **Fax:** _____

State license: _____ **County certificate:** _____

Contractor address: _____ **City:** _____ **State:** _____

Zip: _____ **Contractor Email Address:** _____

Architect name, address: _____ **email:** _____

Engineer name, address: _____ **email:** _____

Mortgage/Bonding company name, address: _____ **email:** _____

Contact person: _____ **Phone:** _____ **Fax:** _____

Email address permit status notification: _____

Square feet under roof of this project: _____ Estimated Value: _____

Detailed description of proposed work: _____

Subcontractor list

	Print qualifier name	County certificate number	State license number	Signature or email
MECHANICAL:	_____	# _____	# _____	_____
ELECTRIC:	_____	# _____	# _____	_____
PLUMBING:	_____	# _____	# _____	_____
GAS:	_____	# _____	# _____	_____
ROOFING:	_____	# _____	# _____	_____
IRRIGATION:	_____	# _____	# _____	_____
OTHER:	_____	# _____	# _____	_____

PMT 1 Rev. 2/15

"Meeting Needs by Exceeding Expectations"

BUILDING PERMIT APPLICATION

Power: Temporary pole: ☐Yes ☐ No Upgrade from _____ Amp to _____ Amp
Manufactured home information: Size home: (L) _____ (W) _____ ☐ New ☐ Used
Wind zone: ☐ #1 ☐#2 ☐ #3 Location of wind zone data plate: _____
Well and pump information: Well: ☐ New install ☐ Replacement ☐ Central water

Irrigation: Location of backflow _____ Rain sensor: _____

Timer: _____ Number of heads: _____

Demolition information: Type of building: _____ Slab remain: Yes _____ No_____

NOTICE

Application is hereby made to obtain a permit to do the work and installations as indicated. I certify that no work has been commenced prior to the issuance of a permit and that all work will be performed to meet the standards of all laws regulating construction in this jurisdiction. I understand that a separate permit may be required for ELECTRICAL, PLUMBING, SIGNS, IRRIGATION WELLS, POOLS, FURNACES, BOILERS, HEATERS, TANKS and AIR CONDITIONERS, etc.

Owner's electronic submission statement: Under penalty of perjury, I declare that all the information contained in this building permit application is true and correct.

Owner's affidavit: I certify that the foregoing information is accurate and that all work will be done in compliance with all applicable laws regulating construction and zoning.

WARNING TO OWNER: YOUR FAILURE TO RECORD A NOTICE OF COMMENCEMENT MAY RESULT IN YOUR PAYING TWICE FOR IMPROVEMENTS TO YOUR PROPERTY. A NOTICE OF COMMENCEMENT MUST BE RECORDED AT THE MARION COUNTY CLERK OF THE COURT AND A CERTIFIED COPY FILED AT THE BUILDING DEPARTMENT BEFORE THE FIRST INSPECTION. IF YOU INTEND TO OBTAIN FINANCING, CONSULT WITH YOUR LENDER OR AN ATTORNEY BEFORE RECORDING YOUR NOTICE OF COMMENCEMENT.

_____ and/or _____

OWNER'S SIGNATURE **DATE**

STATE OF _____
County of _____

Sworn to (or affirmed) and subscribed before me
this _____day of _____ 20____
By_____

_____
Notary public

_____
(Print, Type, or Stamp Commissioned Name of Notary Public)

Personally known _____ or Produced Identification
_____

CONTRACTOR'S SIGNATURE **DATE**

STATE OF _____
County of _____

Sworn to (or affirmed) and subscribed before me
this _____day of _____ 20____
By_____

_____
Notary public

_____
(Print, Type, or Stamp Commissioned Name of Notary Public)

Personally known _____ or Produced Identification
_____

Pursuant to Florida Statute 713.135(7) all signatures must be notarized

911 – Management

Arn #: _____ Work type: _____ By: _____ Date: _____
Address: _____ MMV: _____
Community: _____ Letter type (R/C/V/T:) _____

Official use

Marion County
Board of County Commissioners

Growth Services ◆ Planning and Zoning
710 E. Silver Springs Blvd.
Ocala, FL 34470
Phone: 352-438-2600
Fax: 352-438-2601

Site Plan Instructional Information

What is a site plan?

A site plan is a drawing that shows the size and location of existing and proposed construction on a site, including utilities, drainage details, easements, vehicle access and in some cases the landscaping.

Which permit applications require a site plan?

All permits for new buildings or structures, or additions to buildings or structures that require a Zoning Department, Right of Way, or Health Department review must include a site plan.

Is there a specific form required for the site plan?

No. The site plan may be submitted on any size paper, as long as it is drawn to scale and contains all of the required information.

What information is required on the site plan?

All site plans must:

- Be drawn proportionally accurate as possible (Must be to scale when Health Dept. review is required)
- List the dimensions of the property
- Identify all streets abutting the property
- Show all existing and proposed improvements
- Specify shortest distance from proposed improvements to property lines
- Detail all existing and proposed driveways, sidewalks, and easements
- Indicate the front of the property

Projects with a proposed septic tank and/or well also require:

- Illustration of existing and proposed septic systems and/or wells, including the
- shortest distance to property lines (septic tank system approximately 60'x15')
- Listing of all lakes, streams, canals or standing bodies of water within 75' of the property
- Showing proposed and existing wells within 75' of the property
- Identification of the public water service point (meter) and water line location
- Showing the location of any public well servicing multiple residences, within 200' of the property.

- 1 If your property is larger than one acre it may be difficult to draw the entire property to scale and still show the necessary details. In this case, please submit a survey of the entire

Marion County
Board of County Commissioners

Growth Services ◆ Planning and Zoning
710 E. Silver Springs Blvd.
Ocala, FL 34470
Phone: 352-438-2600
Fax: 352-438-2601

property, and draw to scale a one-acre section of the property showing the proposed structure(s) and septic system as specified on this form. Showing the location of all drainage features such as retention areas, swales, ditches (often located along the roadway) 2

- Details of any significant slope in the drain field area of the property, with arrows pointing down slope.

Any incomplete site plan will delay the processing of the permit application.

How many site plan copies are required?
Four site plans are required to be submitted with your permit application. Three additional site plans are required when a septic tank or well is included in the project.

Does the site plan need to be prepared by—and sealed by—an engineer or surveyor?

1. Residential site plans ***do not need*** to be prepared and sealed by an engineer or surveyor.
2. Commercial site plans ***usually do need*** to be prepared and sealed by an engineer, unless the scope of the project is very minor. Call the Zoning Department, (352) 438 – 2675, for clarification on whether the scope of work you are planning is considered a minor building project.

Where can I locate my driveway on a corner lot?
A driveway on a corner lot is limited to the minor street. Furthermore, there is a limitation as to how close the driveway may be located to the intersection (minimum 50' or ½ the lot width, whichever is less.) This is measured from the Point of Tangency (PT) of the pavement, not the lot line. This dimension must be shown on your site plan. For additional information on this issue contact the Right of Way Permitting Division of the Marion County Engineering Department, (352) 671-8686.

2 All parts of the septic system must be installed at least 15' from the top of swales and ditches.

Marion County
Board of County Commissioners

Growth Services ◆ Planning and Zoning
710 E. Silver Springs Blvd.
Ocala, FL 34470
Phone: 352-438-2600
Fax: 352-438-2601

SITE PLAN

State of Florida Department of Health & Marion County Building, Zoning and 9-1-1 Management

Parcel No. _____ **Scale:** _____

All roads bordering property must be identified, and front door clearly indicated. The property dimensions indicated on this site plan *must match* your legal description. On what road does your driveway come out to? _____

Please check if applicable:

_____ Structure is 50' or more from frontage road **-OR-**

_____ Access to or vision of, front door is/will be obstructed in some way (e.g., fence, ditch) **-OR-**

_____ Corner lot; if your lot is a corner lot, which street does your front door face? _____

_____ Does improvements result in new driveway connection at right-of-way? ☐ Yes or ☐ No, existing driveway will be used

_____ Are modifications proposed to existing driveway? Yes or No

_____ Existing driveway is: ☐ concrete or paved ☐ other: _____

FOUR COPIES OF YOUR SITE PLAN ARE REQUIRED WHEN SUBMITTING A PERMIT APPLICATION.
****INCLUDE THREE [3] ADDITIONAL COPIES IF YOUR PROJECT REQUIRES DEPARTMENT OF HEALTH REVIEW****
DRAW OR ATTACH COPY OF SITE PLAN. CLIP REQUIRED NUMBER OF ADDITIONAL COPIES TO THIS APPLICATION.

Site Plan Submitted By: _____ **Date:** _____

PMT 12 - REV 7/15

PRODUCT APPROVAL SPECIFICATION SHEET

As required by Florida Statute 553.842 and Florida Administrative Code 9B-72, please provide the information and approval numbers on the building components listed below if they will be utilized on the construction project for which you are applying for a building permit. We recommend you contact your local product supplier should you not know the product approval number for any of the applicable listed products. Statewide approved products are listed online at www.floridabuilding.org.

Category/Subcategory	Manufacturer	Product Description	Approval Number(s)
1. EXTERIOR DOORS			
A. SWINGING			
B. SLIDING			
C. SECTIONAL/ROLL UP			
D. OTHER			
2. WINDOWS			
A. SINGLE/DOUBLE HUNG			
B. HORIZONTAL SLIDER			
C. CASEMENT			
D. FIXED			
E. MULLION			
F. SKYLIGHTS			
G. OTHER			
3. PANEL WALL			
A. SIDING			
B. SOFFITS			
C. STOREFRONTS			
D. GLASS BLOCK			
E. OTHER			
4. ROOFING PRODUCTS			
A. ASPHALT SHINGLES			
B. NON-STRUCT METAL			
C. ROOFING TILES			
D. SINGLE PLY ROOF			
E. OTHER			
5. STRUCT COMPONENTS			
A. WOOD CONNECTORS			
B. WOOD ANCHORS			
C. TRUSS PLATES			
D. INSULATION FORMS			
E. LINTELS			
F. OTHERS			
6. NEW EXTERIOR			
A. ENVELOPE PRODUCTS			
A.			

The products listed below did not demonstrate product approval at plan review. I understand that at the time of inspection of these products, the following information must be available to the inspector on the jobsite; **(1)** copy of the product approval **(2)** performance characteristics which the product was tested and certified to comply with **(3)** copy of the applicable manufacturer's installation requirements. Further, I understand these products may have to be removed if approval cannot be demonstrated during inspection.

_____

_____

_____ _____

APPLICANT SIGNATURE DATE

Marion County
Board of County Commissioners

Building Safety

2710 E. Silver Springs Blvd.
Ocala, FL 34470
Phone: 352-438-2400
Fax: 352-438-2401

SUBJECT: Wood or Wood/Plastic Composite Structures:

DECKS, RAMPS, PLATFORMS, STAIRS, LANDINGS & BALCONIES.

RESIDENTIAL

Residential wood or wood/plastic composite structures that **DO NOT require a permit:**

Wood or wood/plastic composite structures that are built on the ground or are accessed by 1 or **less** step or riser.

- These structures are required to be anchored to the ground.
- These structures are required to be built out of termite and decay resistant material.
- These structures are recommended to meet Florida Residential Code (FRC) 2010, Section R311 code.

Residential wood or wood/plastic composite structures that **DO require a permit**:

Wood or wood/plastic composite structures that are serviced by **more than 1 stair** or are built **more than 9 inches** above finished grade.

- These structures are required to be anchored to the ground.
- These structures are required to be built out of termite and decay-resistant material.
- These structures are required to have scaled construction details and plans for review prior to permit.
- These structures are required to meet the FRC 2010, Section R311. These codes shall govern all construction: guards, handrails, stairs, landings, slope and dimensions.

COMMERCIAL

All commercial wood or wood/plastic composite structures **shall** be permitted.

Note: Approval is required from Marion County Zoning Division for all permitted and non-permitted: **Decks, Ramps, Platforms, Stairs, Landings and Balconies.**

Rev 06/14

DECK CONSTRUCTION GUIDE

For detached and semi-detached dwellings

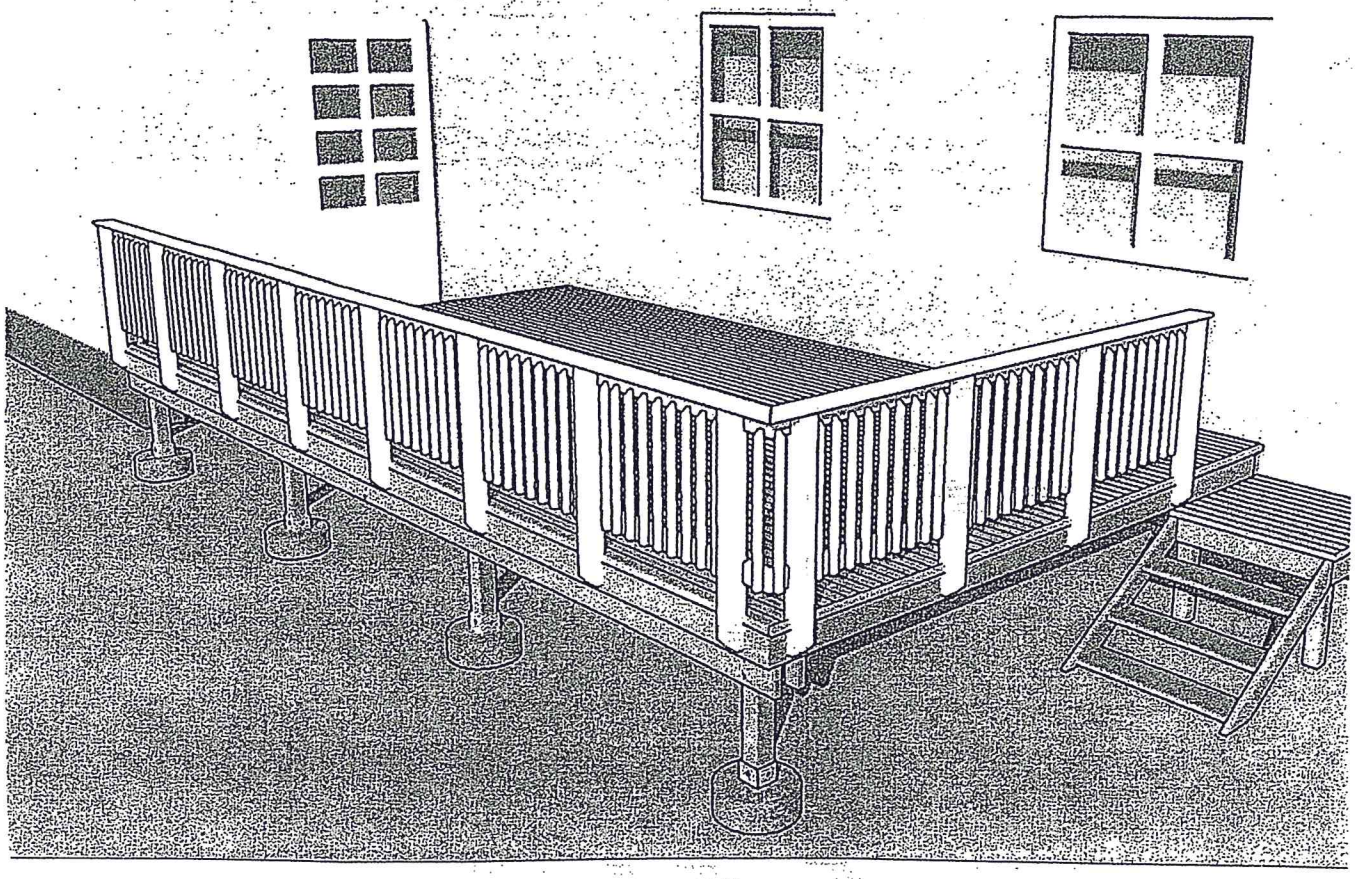

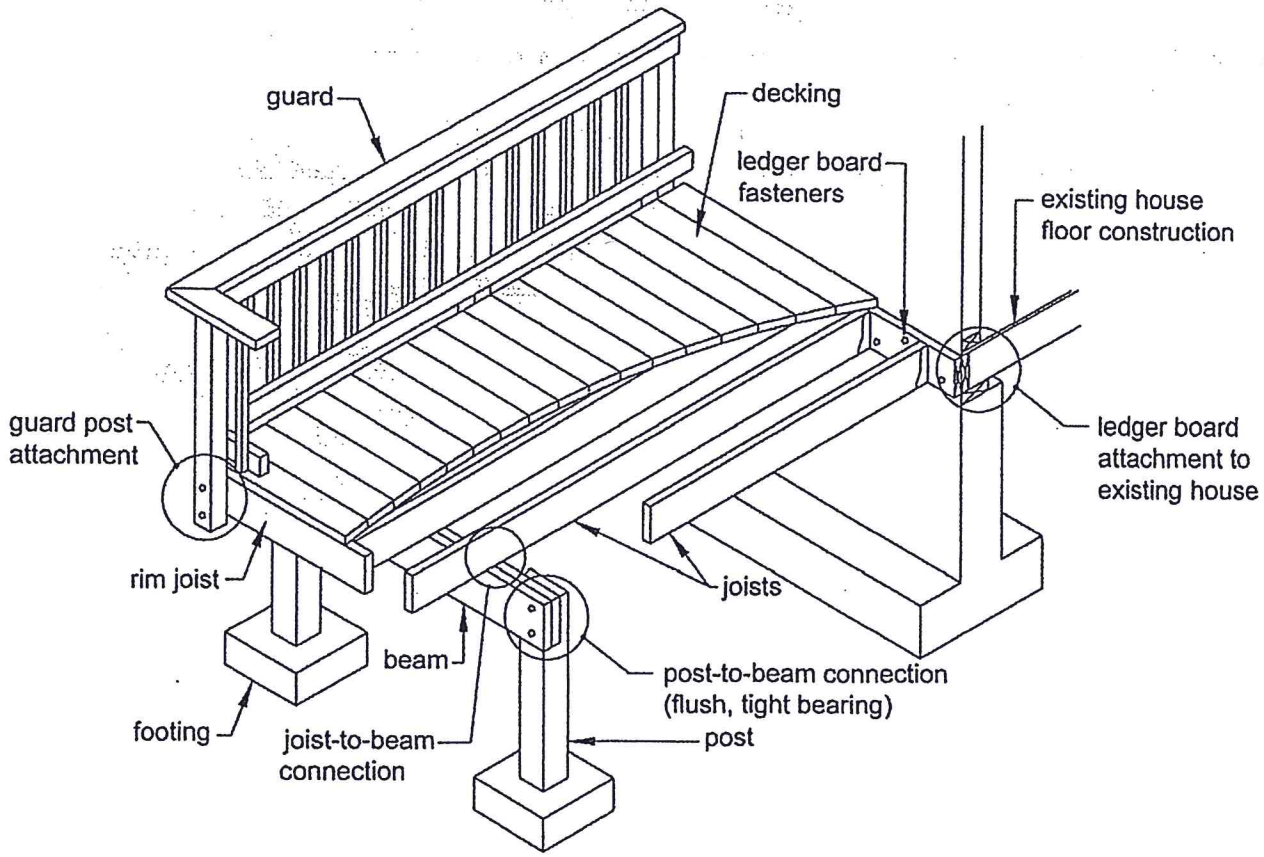

Deck Part Identification

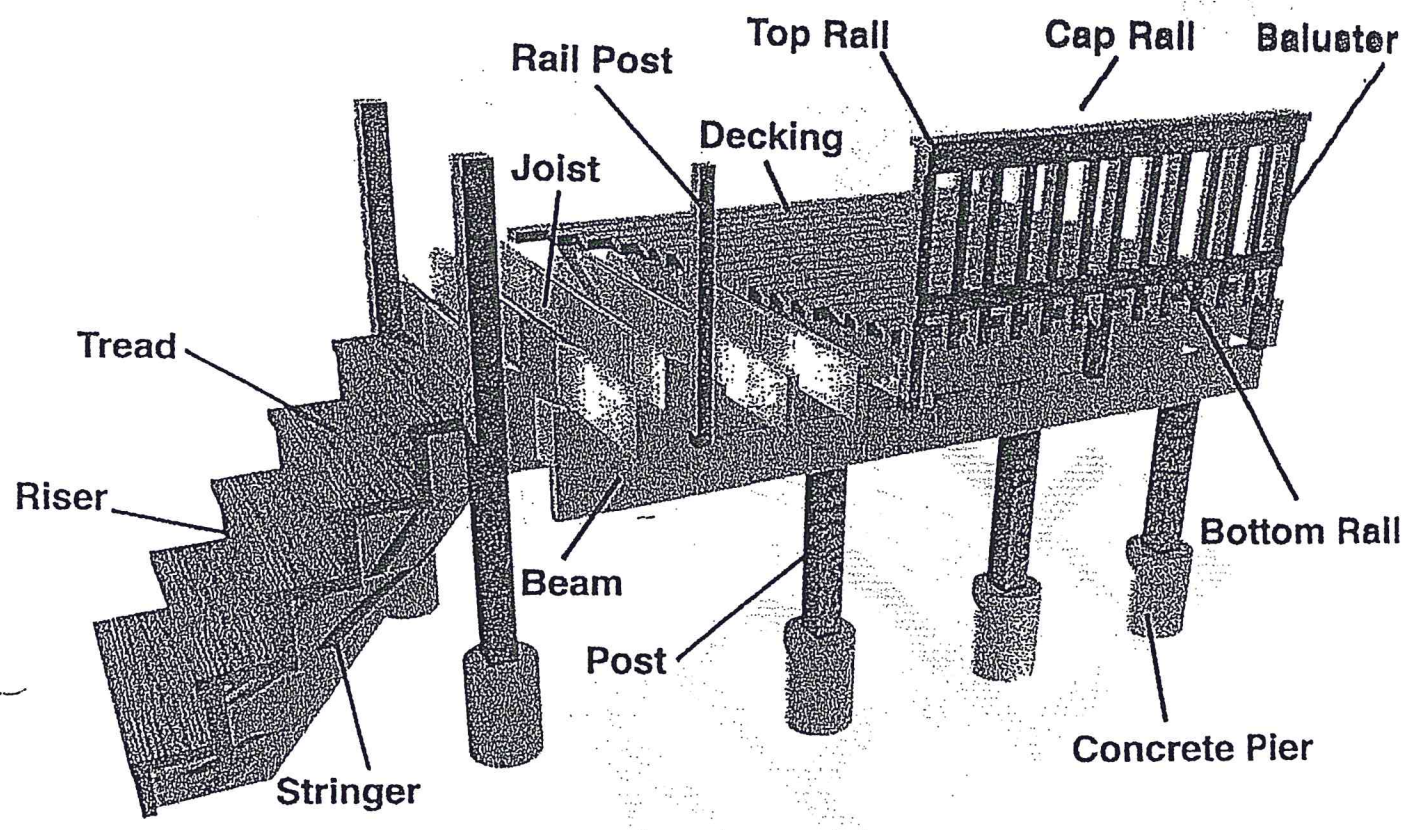

Baluster	The vertical pieces of a railing spaced at regular intervals between posts.
Beam	A horizontal framing piece, which rests on posts and supports joists.
Decking	The boards used to make the walking surface of the deck
Joist	A horizontal frame piece that supports the decking and spreads the weight over the beams
Ledger	A horizontal strip that connects the deck to the house.
Concrete Pier	A vertical piece of concrete, used as a footing to support a post.
Post	A vertical framing piece, used to support a beam or a joist.
Riser	The board attached to the verticcal cut surface of a stair stringer.
Stringer	The diagonal board used to support treads and risers on a stairway.
Tread	The horizontal surface of a stair, perpendicular to the riser.
Bottom Rail	The lower horizontal piece that connects rail posts
Top Rail	The upper horizontal piece that connects rail posts
Cap Rail	The top horizontal trim on railing.
Rail Post	The vertical posts connected to the deck framing, to which railing is secured.

Dimension Requirements FRC 2010

Railing height 36"- 42"
Railings required on all decks 30" of higher
Guard railing opening spaces 4" max.
Stair width 36: min.
Landing same dim as stair width
Riser height 7 ¾" max
Tread depth 10" min.
Floor joist spacing 16"
Hangers required @ rim joists
All ledgers to be bolted

SAMPLE PLAN

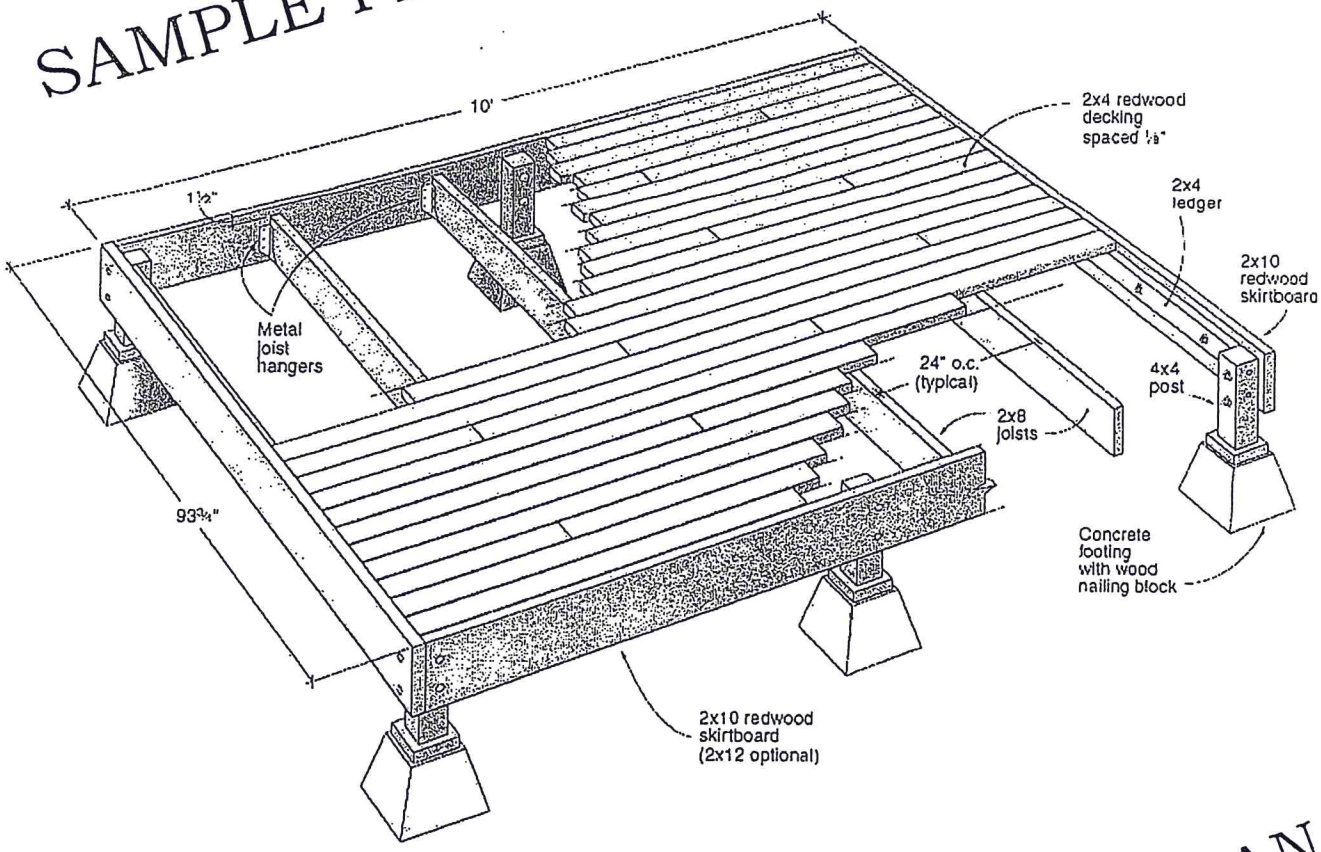

SAMPLE PLAN

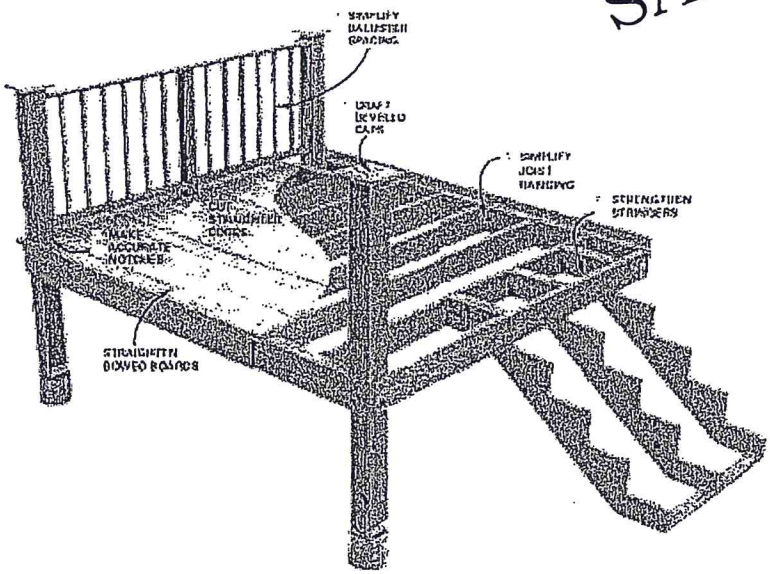

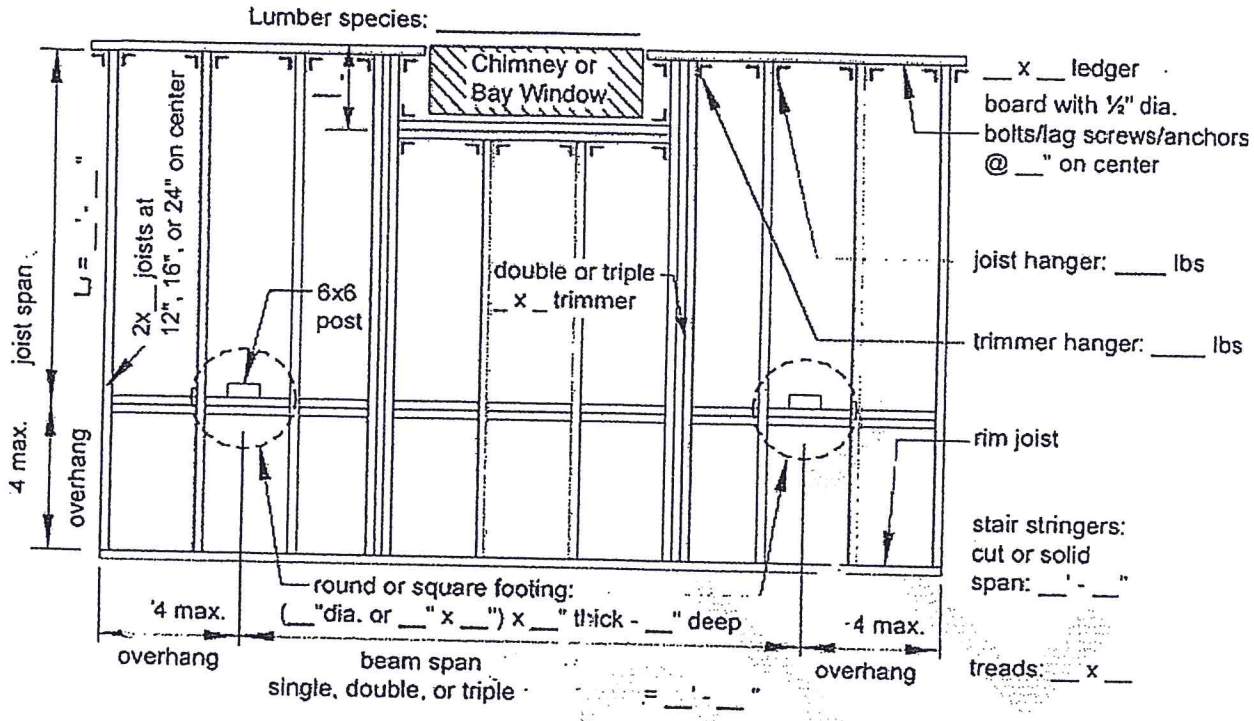

DECK DRAWING WORKSHEET

Marion County
Board of County Commissioners

Building Safety ◆ Permitting

2710 E. Silver Springs Blvd.
Ocala, FL 34470
Phone: 352-438-2400
Fax: 352-438-2401

Construction Lien Law Affidavit

I/We will make all necessary attempts to provide a copy of the Construction Lien Law, Florida Statue Chapter 713 to the property owners(s) of the real property to which improvements are to be constructed.

Property owner(s) name(s): _____

Property address: _____

Parcel number: _____ Sec: _____ Twp: _____ Rge: _____

Subdivision: _____

Lot: _____ Block: _____ Unit: _____

Form shall be signed by only ONE of the following individuals:

Printed name of owner	Signature of owner	Date
Printed name of contractor	Signature of contractor	Date
Printed name of owner/ Contractor's authorized agent	Signature of authorized agent	Date

PMT 3 Rev. 7/15

Marion County
Board of County Commissioners

Building Safety ◆ Permitting

2710 E. Silver Springs Blvd.
Ocala, FL 34470
Phone: 352-438-2400
Fax: 352-438-2401

Florida's Construction Lien Law

Protect Yourself and Your Investment

According to Florida law, those who work on your property or provide materials, and are not paid-in-full, have a right to enforce their claim for payment against your property. This claim is known as a construction lien. If your contractor fails to pay subcontractors or material suppliers, the people who are owed money may look to your property for payment, **even if you have paid your contractor in full. This means that if a lien is filed against your property, your property could be sold against your will to pay for labor, materials, or other services which your contractor may have failed to pay.** This document provides information regarding Florida Statute 713, Part 1, as it pertains to home construction and remodeling, and provides tips on how you can avoid construction liens on your property.

Protecting Yourself

If you hire a contractor and the improvements cost more than $2,500,(Except for the repair or replacement of an existing heating or air conditioning system in the amount of $7,500.00 or more, you should know the following:

- You may be liable if you pay your contractor and he then fails to pay his suppliers or contractors. There is a way to protect yourself. A Release of Lien is a written statement that removes your property from the threat of lien. Before you make any payment, be sure you receive this waiver from suppliers and subcontractors covering the materials used and work performed on your property.

- Request from the contractor, via certified or registered mail, a list of all subcontractors and suppliers who have a contract with the contractor to provide services or materials to your property. If your contract calls for partial payments before his work is completed, get a Partial Release of Lien covering all workers and materials used to that point.

- Release of Lien covering all workers and materials used to that point.

- Before you make the last payment to your contractor, obtain an affidavit from your contractor that specifies all unpaid parties who performed labor, services or provided services or materials to your property. Make sure that your contractor provides you with the final releases from these parties before you make the final payment.

- Always file a Notice of Commencement before beginning a home construction or remodeling project. The local authority that issues building permits is required to provide this form. You must record the form with the Clerk of the Circuit Court in the county where the property being improved is located. Also post a certified copy at the jobsite. (In lieu of a certified copy, you may post an affidavit stating that a Notice of Commencement has been recorded. Attach a copy of the Notice of Commencement to the affidavit.) (continued on next page).

- In addition, the building department is prohibited from performing the first inspection if the Notice of Commencement is not also filed with the building department. You can also supply a notarized statement that the Notice has been filed, with a copy of the attached. The Notice of Commencement notes the intent to begin improvements, the location of the property, description of the work and the amount of bond (if any.) It also identifies the property owner, contractor, surety lender and other pertinent information. Failure to record a Notice of Commencement or incorrect information on the Notice, could contribute to your having to pay twice for the same work or materials.

Notice to Owner

Prior to filing a lien, a lienor who does **not** have a direct contract with the owner, must serve the owner with a Notice to Owner. The Notice to Owner must state the lienor's name and address, and a description of the real property and the nature of the services or materials being furnished. The Notice to Owner must be served before commencing, or within 45 days of commencing, to furnish the services or materials (but before owner's final payment to the contractor.) A lien cannot be enforced unless the lienor has served the Notice to Owner as described above.

Whose Responsibility Is It To Get These Releases?

You can stipulate in the agreement with your contractor that he must provide all releases of lien. If it is not a part of the contract, however, or you act as your own contractor, YOU must get the releases. If you borrow money to pay for the improvements and the lender pays the contractor(s) directly without obtaining releases, the lending institution may be responsible to you for any loss.

What Can Happen if I Don't Get Releases of Lien?

You will not be able to sell your property unless all outstanding liens are paid. Sometimes a landowner can even be forced to sell his property to satisfy a lien.

Who Can Claim a Lien On My Property?

Contractors, laborers, materials suppliers, subcontractors, and professionals such as architects, landscape architects, interior designers, engineers or land surveyors all have the right to file a claim of lien for work or materials. **Always require a release of lien from anyone who does work on your home.**

Contesting a Lien

A lien is valid for one year, unless a lienor files a lawsuit to enforce the lien prior to the expiration of the year. An owner has a right to file a Notice of Contest of Lien during the one year period. Upon the filing of a Notice of Contest of Lien, a lienor must file a lawsuit to enforce the lien within 60 days. Failure of the lienor to timely file a lawsuit renders the lien invalid.

THE CONSTRUCTION LIEN LAW IS COMPLEX AND CANNOT BE COVERED COMPLETELY IN THIS DOCUMENT. WE RECOMMEND THAT WHENEVER A SPECIFIC PROBLEM ARISES, YOU CONSULT AN ATTORNEY.

To register a complaint (or learn if complaints have been filed against a prospective contractor), contact the Florida Department of Business and Professional Regulation's Customer Contact Center at: 850.487.1395 CallCenter@dbpr.state.fl.us **Or write to**: Florida Department of Business and Professional Regulation 1940 North Monroe Street, Tallahassee, Florida 32399-1027.**Visit online at**: www.MyFloridaLicense.com License verification is available 24 hours a day and 7 days a week by calling the Customer Contact Center at 850.487.1395 or going online to www.MyFloridaLicense.com.

You may also contact your local building department or the Better Business Bureau.

Marion County
Board of County Commissioners

Building Safety ◆ Permitting

2710 E. Silver Springs Blvd.
Ocala, FL 34470
Phone: 352-438-2400
Fax: 352-438-2401

Notice of Commencement

Permit no.: _____ Tax folio/Parcel ID: _____ State: _____ County: _____

The undersigned hereby gives notice that improvement will be made to certain real property, and in accordance with Florida Statutes (FS) chapter 713, the following information is provided in this notice of commencement.

1. Description of property should include the full, legal description and street address, if available: _____

2. General description of improvement: _____
3. Owner or lessee name and address if lessee is contracted for the improvement: _____

   3a. Interest in property: _____
   3b. Name and address of fee simple titleholder (if different from owner listed above): _____

4. Contractor-qualifier name and address: _____

5. Surety name and address, if applicable attach copy payment bond: _____

   5a. Amount of bond: $ _____
6. Lender name and address: _____

7. Persons within the state of Florida as designated by owner upon whom notices or other documents may be served as provided by FS section 713.13(1) (a) 7 (provide name and mailing address): _____

8. In to owner, name and address of designated person(s) receiving lienor's notice copy per FS section 713.13(1)(b): _____

9. Notice of commencement expiration date (not prior to construction completion or contractor final payment and one year after recording date unless otherwise specified): _____

WARNING TO OWNER: Any payments made by owner after notice of commencement expiration date are considered improper payments (FS chapter 713, part I, section 713.13 and can result in your paying twice for improvements to your property. A notice of commencement must be recorded with Marion County Clerk of the Court and a certified copy filed with Building Safety and posted on the jobsite prior to first inspection. If you intend to obtain financing, consult with your lender or an attorney before recording your notice of commencement.

Under penalties of perjury, I declare that I have read the foregoing notice of commencement and that the facts stated therein are true to the best of my knowledge and belief.

_____ _____
Signature of owner or lessee (or authorized representative) Date

Signatory's title/office _____

STATE OF FLORIDA County of _____

The foregoing instrument was acknowledged before me this _____ day of _____ 20____, by _____ (printed name) as _____ (authority/representative type; officer, trustee or attorney-in-fact) for _____ (name of party/corporation/company for whom instrument was executed).

_____
Signature of Notary Public

Personally known _____ or produced identification _____ (Seal)

PMT 7 - Rev. 8/15

"Meeting Needs by Exceeding Expectations"

Marion County
Board of County Commissioners

Building Safety ◆ Permitting

2710 E. Silver Springs Blvd.
Ocala, FL 34470
Phone: 352-438-2400
Fax: 352-438-2401

2012 Florida Statute – Chapter 489.103 (7c)

OWNER- BUILDER DISCLOSURE STATEMENT

Before a building permit can be issued, an owner must personally appear and sign the building permit application and must satisfy local permitting agency requirements, if any, proving that the owner has a complete understanding of the owner's obligations under the law as specified in the disclosure statement in this section.

1. I understand that state law requires construction to be done by a licensed contractor and have applied for an owner-builder permit under an exemption from the law. The exemption specifies that I, as the owner of the property listed, may act as my own contractor with certain restrictions even though I do not have a license.

2. I understand that building permits are not required to be signed by a property owner unless he or she is responsible for the construction and is not hiring a licensed contractor to assume responsibility.

3. I understand that, as an owner-builder, I am the responsible party of record on a permit. I understand that I may protect myself from potential financial risk by hiring a licensed contractor and having the permit filed in his or her name instead of my own name. I also understand that a contractor is required by law to be licensed in Florida and to list his or her license numbers on permits and contracts.

4. I understand that I may build or improve a one-family or two-family residence or a farm outbuilding. I may also build or improve a commercial building if the costs do not exceed $75,000. The building or residence must be for my own use or occupancy. It may not be built or substantially improved for sale or lease. If a building or residence that I have built or substantially improved myself is sold or leased within 1 year after the construction is complete, the law will presume that I built or substantially improved it for sale or lease, which violates the exemption.

5. I understand that, as the owner-builder, I must provide direct, onsite supervision of the construction.

6. I understand that I may not hire an unlicensed person to act as my contractor or to supervise persons working on my building or residence. It is my responsibility to ensure that the persons whom I employ have the licenses required by law and by county or municipal ordinance.

7. I understand that it is a frequent practice of unlicensed persons to have the property owner obtain an owner-builder permit that erroneously implies that the property owner is providing his or her own labor and materials. I, as an owner-builder, may be held liable and subjected to serious financial risk for any injuries sustained by an unlicensed person or his or her employees while working on my property. My homeowner's insurance may not provide coverage for those injuries. I am willfully acting as an owner-builder and am aware of the limits of my insurance coverage for injuries to workers on my property.

8. I understand that I may not delegate the responsibility for supervising work to a licensed contractor who is not licensed to perform the work being done. Any person working on my building who is not licensed must work under my direct supervision and must be employed by me, which means that I must comply with laws requirin~ the withholding of federal income tax and social security contributions under the Federal Insurance Contribution Act (FICA) and must provide workers' compensation for the employee. I understand that my failure to follow these laws may subject me to serious financial risk.

9. I agree that, as the party legally and financially responsible for this proposed construction activity, I will abide by all applicable laws and requirements that govern owner-builders as well as employers. I also understand that the construction must comply with all applicable laws, ordinances, building codes, and zoning regulations.

10. I understand that I may obtain more information regarding my obligations as an employer from the Internal Revenue Service, the United States Small Business Administration, the Florida Department of Financial Services, and the Florida Department of Revenue. I also understand that I may contact the Florida Construction Industry Licensing Board at website http://www.marioncountyfl.org/contractorlicensing or call (850) 487-1395 for more information about licensed contractors.

11. I am aware of and consent to an owner-builder building permit applied for in my name and understand that I am the party legally and financially responsible for the **proposed construction activity at the following Address:** _____

12. I agree to notify the Marion County Building Safety Permitting Office immediately of any additions, deletions, or changes to any of the information that I have provided on this disclosure.

Licensed contractors are regulated by laws designed to protect the public. If you contract with a person who does not have a license, the Construction Industry Licensing Board and Department of Business and Professional Regulation may be unable to assist you with any financial loss that you sustain as a result of a complaint. Your only remedy against an unlicensed contractor may be in civil court. It is also important for you to understand that, if an unlicensed contractor or employee of an individual or firm is injured while working on your property, you may be held liable for damages. If you obtain an owner-builder permit and wish to hire a licensed contractor, you will be responsible for verifying whether the contractor is properly licensed and the status of the contractor's workers' compensation coverage.

_____
(Signature of Owner)

STATE OF _____

COUNTY OF _____

Sworn to (or affirmed) and subscribed before me this _____ day of_____, 20_____,
by_____ (name of person making statement).

_____
(Signature of Notary Public - State of Florida)

_____
(Print, Type, or Stamp Commissioned Name of Notary Public)

Personally Known ____ OR Produced Identification _____
Type of Identification Produced

Marion County
Board of County Commissioners

Building Safety ◆ Permitting

2710 E. Silver Springs Blvd.
Ocala, FL 34470
Phone: 352-438-2400
Fax: 352-438-2401

2012 Florida Statute – Chapter 489.103 (7c)

OWNER- BUILDER DISCLOSURE STATEMENT

Before a building permit can be issued, an owner must personally appear and sign the building permit application and must satisfy local permitting agency requirements, if any, proving that the owner has a complete understanding of the owner's obligations under the law as specified in the disclosure statement in this section.

1. I understand that state law requires construction to be done by a licensed contractor and have applied for an owner-builder permit under an exemption from the law. The exemption specifies that I, as the owner of the property listed, may act as my own contractor with certain restrictions even though I do not have a license.

2. I understand that building permits are not required to be signed by a property owner unless he or she is responsible for the construction and is not hiring a licensed contractor to assume responsibility.

3. I understand that, as an owner-builder, I am the responsible party of record on a permit. I understand that I may protect myself from potential financial risk by hiring a licensed contractor and having the permit filed in his or her name instead of my own name. I also understand that a contractor is required by law to be licensed in Florida and to list his or her license numbers on permits and contracts.

4. I understand that I may build or improve a one-family or two-family residence or a farm outbuilding. I may also build or improve a commercial building if the costs do not exceed $75,000. The building or residence must be for my own use or occupancy. It may not be built or substantially improved for sale or lease. If a building or residence that I have built or substantially improved myself is sold or leased within 1 year after the construction is complete, the law will presume that I built or substantially improved it for sale or lease, which violates the exemption.

5. I understand that, as the owner-builder, I must provide direct, onsite supervision of the construction.

6. I understand that I may not hire an unlicensed person to act as my contractor or to supervise persons working on my building or residence. It is my responsibility to ensure that the persons whom I employ have the licenses required by law and by county or municipal ordinance.

7. I understand that it is a frequent practice of unlicensed persons to have the property owner obtain an owner-builder permit that erroneously implies that the property owner is providing his or her own labor and materials. I, as an owner-builder, may be held liable and subjected to serious financial risk for any injuries sustained by an unlicensed person or his or her employees while working on my property. My homeowner's insurance may not provide coverage for those injuries. I am willfully acting as an owner-builder and am aware of the limits of my insurance coverage for injuries to workers on my property.

8. I understand that I may not delegate the responsibility for supervising work to a licensed contractor who is not licensed to perform the work being done. Any person working on my building who is not licensed must work under my direct supervision and must be employed by me, which means that I must comply with laws requiring the withholding of federal income tax and social security contributions under the Federal Insurance Contribution Act (FICA) and must provide workers' compensation for the employee. I understand that my failure to follow these laws may subject me to serious financial risk.

9. I agree that, as the party legally and financially responsible for this proposed construction activity, I will abide by all applicable laws and requirements that govern owner-builders as well as employers. I also understand that the construction must comply with all applicable laws, ordinances, building codes, and zoning regulations.

10. I understand that I may obtain more information regarding my obligations as an employer from the Internal Revenue Service, the United States Small Business Administration, the Florida Department of Financial Services, and the Florida Department of Revenue. I also understand that I may contact the Florida Construction Industry Licensing Board at website http://www.marioncountyfl.org/contractorlicensing or call (850) 487-1395 for more information about licensed contractors.

11. I am aware of, and consent to an owner-builder building permit applied for in my name and understand that I am the party legally and financially responsible for the **proposed construction activity at the following Address:** _____

12. I agree to notify the Marion County Building Safety Permitting Office immediately of any additions, deletions, or changes to any of the information that I have provided on this disclosure.

Licensed contractors are regulated by laws designed to protect the public. If you contract with a person who does not have a license, the Construction Industry Licensing Board and Department of Business and Professional Regulation may be unable to assist you with any financial loss that you sustain as a result of a complaint. Your only remedy against an unlicensed contractor may be in civil court. It is also important for you to understand that, if an unlicensed contractor or employee of an individual or firm is injured while working on your property, you may be held liable for damages. If you obtain an owner-builder permit and wish to hire a licensed contractor, you will be responsible for verifying whether the contractor is properly licensed and the status of the contractor's workers' compensation coverage.

Customer Copy

_____
(Signature of Owner)

STATE OF _____

COUNTY OF _____

Sworn to (or affirmed) and subscribed before me this _____day of_____, 20_____,
by_____ (name of person making statement).

_____
(Signature of Notary Public - State of Florida)

_____
(Print, Type, or Stamp Commissioned Name of Notary Public)

Personally Known ____ OR Produced Identification _____
Type of Identification Produced

03/2013

Marion County
Board of County Commissioners

Building Safety ◆ Permitting

2710 E. Silver Springs Blvd.
Ocala, FL 34470
Phone: 352-438-2400
Fax: 352-438-2401

A WARNING TO OWNER/BUILDER PERMIT APPLICATION!

If you do not intend to do the work yourself and have been asked by someone without a contractor's license to pull your own permit, you are at risk of financial harm and penalty.

Chapter 489-103(7), Florida Statues states that owners of property must directly supervise the work being performed. Any Person working on your construction project who is not a licensed contractor must be employed by you which means that you must deduct F.I.C.A and withholding tax and provide workers compensation for the employee.

Without worker's compensation insurance, you could be held liable for injuries received on your property. Typically, your homeowners' insurance policy will not honor your claim if the work performed required a licensed contractor. You could be responsible for thousands of dollars in medical bills

NOT ONLY IS IT DANGEROUS, IT IS ALSO A CRIME.

Chapter 455.227, Florida Statues states that any person who knowingly aides, assists, procures, employs or advises an unlicensed individual can be charged with a first degree misdemeanor and may face fines up to $5,000.00 for each offense.

It is important to know that owners of property do not receive a discounted permit fee or obtaining a permit themselves. A licensed contractor in good standing with the Building Department will always obtain a permit for your project.

PROTECT YOURSELF!
HIRE ONLY LICENSED CONTRACTORS

For more information please contact the Marion County Licensing Division at (352) 438-2429 before you apply for the permit. You can check for licensed contractors by visiting our website at www.marioncountyfl.org/Building/building_default.aspx or at www.myflorida.com/dbpr. You may report unlicensed activity by calling (352) 438-2429

PMT 20 – 10/7/15